ieema journal

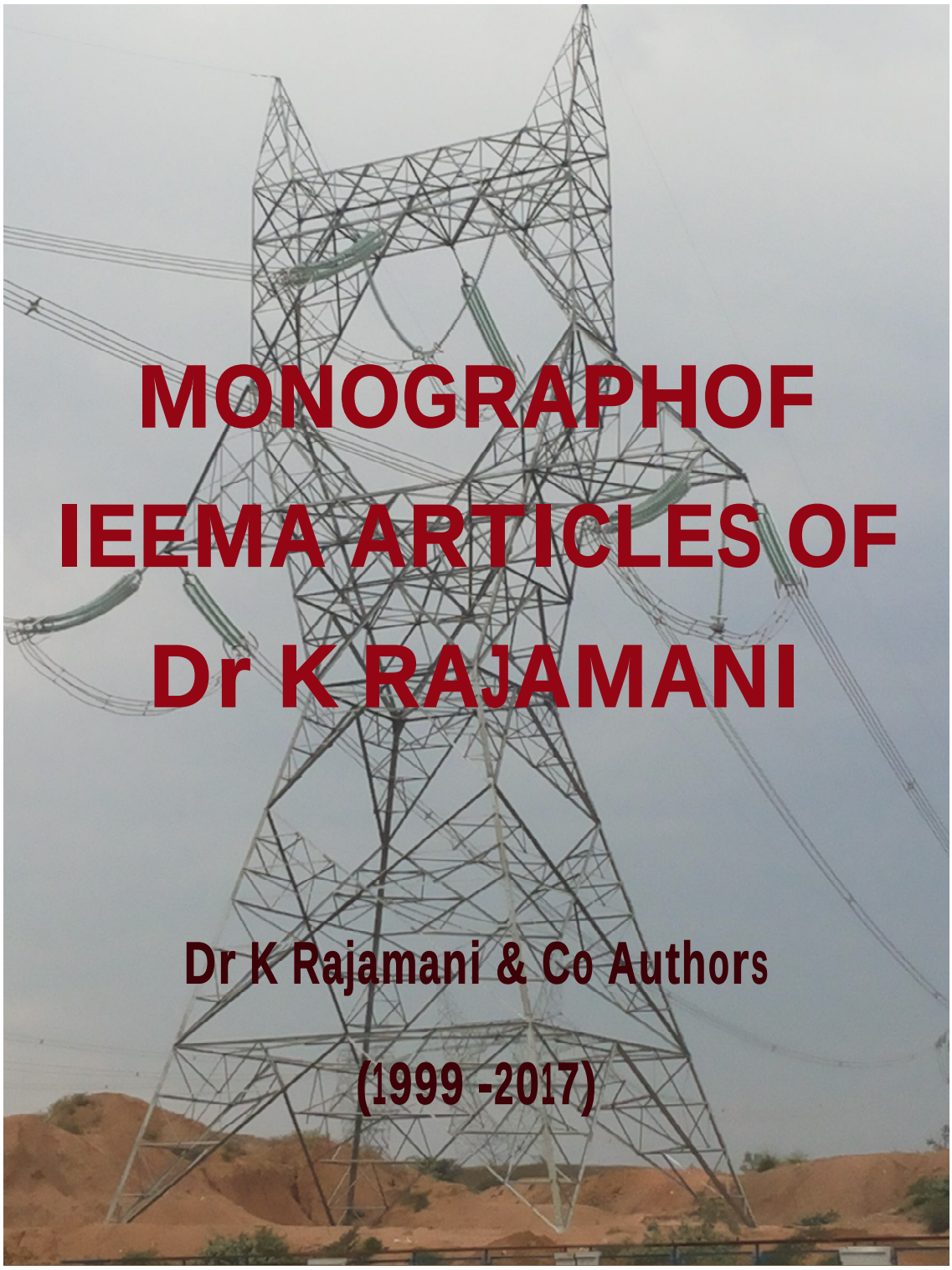

MONOGRAPHOF IEEMA ARTICLES OF Dr K RAJAMANI

Dr K Rajamani & Co Authors

(1999 -2017)

Rev 4, June 2017

PREFACE

By late 1990s, I had almost two decades of experience working in Industry after finishing my studies. During my frequent interactions with people involved in design, testing, commissioning, operation or maintenance, I could sense that many of the jobs are carried out without understanding the underlying concepts behind them. There were hardly any technical articles which addressed the problems faced by designers or field engineers. Either the articles are too scholarly with lot of math which the field engineers found it difficult to grasp or too product specific from equipment manufacturers. Some articles that appeared in 'popular' magazines were too shallow. Then I started training courses on hard core electrical subjects for field engineers explaining the theory and practice. The response for these courses was unprecedented. Then I thought that to reach wider audience, it is necessary to publish articles in a journal which has appeal with field engineers. From 1999, I started publishing articles in IEEMA Journal / IEEMA sponsored technical forums. The feedback was very encouraging as engineers doing design, testing & commissioning and O&M found that the articles have sufficient technical depth. They could assimilate the concepts quickly and directly apply the same in their work. The confidence level of practicing engineers rose sharply and this has given me enormous satisfaction that I can give something back to my fraternity.

The present monograph is compilation of articles published in IEEMA Journal / IEEMA sponsored conferences. Articles written from 1999 till date are included. The list of articles is given in Content Page. The articles are referred by Serial Number given in Content Page. The major topics covered in the monograph are classified as follows:

(a) Reactive compensation – The concepts applicable to transmission, generation and distribution are covered in articles [1], [2], [17] and [32].

(b) Earthing and Grounding – Covered in articles [8], [9], [12], [13] and [14]. These articles are specifically written to demystify the subject and remove many misconceptions existing in the mind of field engineers. Many were unaware why different systems have different grounding practices – 415V system is solidly grounded, 400kV system is solidly grounded but 6.6 kV system is resistance grounded. The fairy tales in 'earthing' are too many to list. These articles addressed the issues squarely to improve clarity of understanding.

(c) Instrument Transformers - Covered in articles [11], [16] and [18] and [31]. Design engineers will find the articles very useful when formulating the specifications.

Also, exhaustive testing procedures of instrument transformers at site are given which will be useful to field engineers who can do the testing with generally available testing tools.

(d) Protection: Covered in articles [4], [5], [7], [10], [22], [23], [24], [27] and [28]. The articles cover salient features of differential, REF, over current and stator earth fault protections.

(e) Transformer: Covered in articles [3], [6], [19], [20], [25], [29], [30] and [34]. Mysteries of delta connection and zig zag connection are exposed. Significance of OTI and WTI measurements is explained. Results of unique experiment involving parallel operation of transformers with unequal taps are presented.

(f) Basic Concepts in power engineering: [35] is Part 1 of the series covering miscellaneous topics. [36] is Part 2 of the series dealing exclusively on transformer. [37] is Part 3 of the series dealing exclusively on induction motor.

(g) Special topics – [15] deals with measurements of generator parameters by on-line testing. [21] deals with application of Fault Passage indicators in distribution systems. [26] deals with measurement of sequence impedance of cable at site. [33] deals with Power Quality issues with supporting site measurements.

All the articles are converted into a 'book readable' form and put in a single place when preparing this monograph. The readers will have the 'feel' of reading a book. If the contents of this monograph enrich the professional life of readers, the authors will be very satisfied. Readers are encouraged to send their comments, suggestions and remarks to the following contact: rajamani_trg@yahoo.co.in.

MESSAGE FROM EDITOR OF IEEMA JOURNAL

Dr. K. Rajamani, one of the most experienced names in the field of electrical industry and power systems has been contributing technical articles to IEEMA Journal for over a decade.

Keeping its tradition of publishing only 'original' articles, IEEMA Journal has published and offered to its readers, Dr. Rajamani's articles which have been rich in technological information.

All the articles compiled in this monograph have been reproduced with the permission from IEEMA (Indian Electrical & Electronics Manufacturers' Association). I am sure that this monograph will be a perfect source for knowledge sharing.

I congratulate Dr Rajamani on this initiative and look forward to his prolonged participation by way of continued contribution of relevant articles to IEEMA Journal in future.

Regards,
Vishal Gakhar
Editor, IEEMA Journal &
Director General, IEEMA
June 2013

FOREWORD

It was June 1752 when Benjamin Franklin first tried to catch electricity from clouds with a kite. That was then, but even now we are trying to manage this energy, which incidentally is also the most familiar form of energy in our daily life.

Today, the challenges for undertaking transmission and distribution system projects, existing system extensions, or refurbishment and life extension of older equipment are as great as ever. In particular, they include emphasis on reaching a decision on the most applicable financial and economic options as well as the most intelligent technical engineering solutions.

I am delighted that Dr K. Rajamani has taken the trouble to record his knowledge in this monograph which should be read by every young engineer and experienced engineers who want to check their designs.

This monograph is well laid out for easy reference, contains many real life examples. It has a good index for those who do not have the time to read it from cover to cover.

Describing in detail how electrical power systems are planned and designed, this monograph illustrates the advantages and disadvantages of the different arrangements and topologies of power systems. It covers many aspects of field testing with associated theory. This monograph is an exemplary effort to bridge the gap between field engineers and designers as basic fundamental concepts used in power systems design are explained lucidly.

As the Chief Executive Officer of Reliance Infrastructure Limited, my association with Dr Rajamani goes back over a decade. At Reliance Infrastructure Ltd, he has been one of the key figures and an engineering resource for all the major power plant jobs done by our EPC Division. He has been deeply involved in revamping of protection systems of supply and transmission divisions of Mumbai.

As an expert, he is even consulted by other group companies including BRPL, BYPL, RCOM, RPOWER, Metro, etc.

He has also spear-headed implementation of SCADA-DMS of Mumbai Distribution System and has also set up power quality measurement and monitoring cell in Mumbai distribution.

Dr Rajamani, in his distinct style, has used his vast experience to come up with articles that are devoid of any unnecessary jargons and yet is able to get his message across.

Dr Rajamani has been a mentor for all young engineers and has conducted large number of workshops on hard core technical subjects.

This monograph is a handy ready reference for both field engineers as well as designers to find answers to their problems.

(Lalit Jalan)

CEO, Reliance Infrastructure Ltd

June 2013

ACKNOWLEDGEMENTS

Indian power sector saw rapid growth in the last fifteen years especially with participation from private parties. Vast pool of engineers is out in the field. But hardly any material was available to them that bridged the gap between theory and practice and addressed their concerns in day to day working. Many journals published scholarly articles from academics but field engineers found them difficult to understand. Another source of information is from technical catalogues from manufacturers but these are equipment specific. After working for a fairly long time in industry, I felt I should share my practical experience backed by sound theory. I was looking for a journal popular among the field engineers in India. The monthly journal published by IEEMA fitted very nicely in this slot. I published my first paper in IEEMA Journal in 1999. Rest, as they say, is history. My association with IEEMA Journal is now fourteen years old. I am extremely grateful to IEEMA for giving me a platform to reach out to such large number of field engineers.

The idea of writing technical articles specifically targeted to field engineers in India was first mooted by Mr Harish Mehta of Power System Consultants (Power-Linkers Group) and the initial prod came from him but with a caution that articles should have minimum math and avoid jargons which scare field engineers! Even today I mentally check whether every article I send for publication to IEEMA meets this litmus test. I thank Mr Mehta for giving the initial push.

I wish to express my deepest appreciation to Mr D Guha with whom I shared a professional relationship for almost eight years in Reliance Infrastructure Ltd. He is extremely clear in his writings, does not unnecessarily complicate simple things, simplify complicated things in a very logical manner so that an average engineer can follow. Most importantly he questions historical legacies and dares to dump them when better solutions are available. He has encouraged me when I wanted to try out new approaches in design, testing and commissioning. My long discussions with Mr Guha were intellectually stimulating and clarified many doubts which are reflected in my writings. He inculcated in me the art of writing in a very structured way so that conclusions naturally follow the discussions. His mantra was ‘Write to express, not to impress’. Trust my articles follow this dictum.

The monograph you are looking at now could not have reached this final shape without the monumental effort of Bina Mitra who has been my co-author for quite a few articles. She has ‘unearthed’ or recreated old articles that have appeared in IEEMA Journals from 1999 to 2006. Each and every article was created in ‘book

readable' form, proof read them and created appropriate links to content list. In addition, she helped in field testing and commissioning, results of which are extensively used in many of my articles. I depended on her to implement new ideas in field and on every occasion she has delivered. Particular reference is made with regard to estimation of generator parameters by online testing which was done for the first time in India. She coordinated the entire testing sequence at site and I really appreciate her help in this unique exercise.

It is a pleasure to acknowledge the contributions of Mr Bodhlal Prasad. He is the 'systems man' whose analytical skills are exemplary. Many of the simplified results presented in articles are in fact based on complex studies done by him in the background

Secretarial and administrative support given by Sangeetha (Kshiteeja Gamre) in preparing this monograph is gratefully acknowledged.

I wish to thank the management of Reliance Infrastructure Ltd for their continuous support both in my professional life as well as personal life. The liberal attitude of the management in allowing me to 'experiment' with new ideas and its unstinted support in providing material and manpower is acknowledged.

Finally, I wish to express my thanks to innumerable readers of my articles in IEEMA Journal. They gave me constant feedback, encouragement and motivation to write articles on various topics. They have only suggested that compiled version of all my articles may be brought out so that they will have a single source of reference for their study. Trust this monograph fulfills their wish.

Before I conclude, I salute my cardiologist Dr. Ajit Menon. He has restored my health and instilled confidence to continue my professional work.

TO

My grandchildren (My bosses – I surrender to them – any choice?)

Kartik Kapil Raghav Shyam

My daughters (Motivating me constantly)

Meera Poornima Shaila

My wife (Pillar of strength)

Latha

…….K Rajamani

AUTHOR

K Rajamani obtained his PhD in Electrical Power Systems from IIT, Mumbai in 1975. From 1976 to 1996, he was with Tata Consulting Engineers, Mumbai. He was involved in design of electrical systems for thermal and nuclear power plants and Static VAR compensators.

From 1997 to 1998, he was with General Electric, Schenectady, USA working on dynamic stability simulations for integrated operations of gas turbines with steel plant loads.

From 1999 to 2003, he was with Power System Consultants, Mumbai working on specialized protection problems and islanding.

From 2004, he is with Reliance Infrastructure Ltd. He guides the electrical group working on distribution, transmission, switchyard and generation (power plant) projects. He spear headed implementation of SCADA-DMS of Mumbai Distribution System. Also he has set up power quality measurement and monitoring cell in Mumbai distribution.

He has conducted more than 125 hard core technical courses. His passion is now teaching and mentoring.

He has published articles in various international and national journals like IEEE, IEE, IFAC, IEEMA, etc.

CONTENTS

Sr. No.	Title of Paper	Year and Month of IEEMA Publication	Pages in IEEMA journal
5.1	Case 1: No local generation at CPP		
5.2	Case 2: Local generation at CPP		
6.0	Conclusions		
	Comments from Scrutineers and Author's Replies		
5	***Sensitivity Comparison of Differential, REF and Over-current Protections***	***October 2002***	***Page 28 to 33***
1.0	Introduction		
2.0	Resistance grounded system		
2.1	Example		
2.2	Sensitivity of differential protection (87)		
2.3	Sensitivity of REF protection (64)		
3.0	Solidly grounded system		
3.1	Sensitivity of differential protection		
3.2	Sensitivity of REF protection		
4.0	Internal fault on delta winding		
4.1	Differential protection		
4.2	Over-current protection		
5.0	Conclusion		
6.0	References		
	Comments from Scrutineers and Author's Replies		
6	***Peculiarities of Delta Connection in Electrical Power Systems***	***December 2003***	***Page 38 to 42***
1.0	Introduction		
2.0	Third harmonic, Zero sequence and Delta		
3.0	Inadvertent Grounding		
4.0	Mal-operation of ground relays for external faults		
5.0	IPCT (Interposing CT) for differential protection of star-star transformer		
6.0	Single phasing in star and delta connected motors		
7.0	Reciprocity in star-delta transformer for ground faults		
8.0	Neutral shift in presence of delta winding		
8.1	Case 1		
8.2	Case 2		
9.0	Conclusion		
7	***Overload Protection of Electrical Equipment***	***June 2004***	***Page 30 to 34***
1.0	Introduction		
2.0	Case Studies		
2.1	Case 1		
2.2	Case 2		
2.3	Case 3		
3.0	Over load and over current		
4.0	Over load protection of HT motors		
4.1	Remarks on use of RTD		

Sr. No.	Title of Paper	Year and Month of IEEMA Publication	Pages in IEEMA journal
5.0	Overload protection of transformer		
6.0	Overload protection of generator		
7.0	Conclusion		
8.0	References		
8	***Earthing of Electrical System – Part I***	***August 2004***	***Page 37 to 40***
1.0	Introduction		
2.0	Distinction between grounding and earthing		
3.0	Earth as conductor		
4.0	Electrode resistance to earth		
5.0	Hemispherical electrode		
6.0	Pipe electrode or driven rod		
7.0	Strip or horizontal wire electrode		
8.0	Influencing factors for electrode resistance		
9.0	Plate electrode		
10.0	Parallel electrodes		
11.0	Resistance of earthing grid		
12.0	Methods to reduce electrode resistance to earth		
13.0	Electrode sizing		
14.0	Conclusion		
15.0	References		
9	***Earthing of Electrical System – Part II***	***May 2005***	***Page 32 to 36***
1.0	Introduction		
2.0	Human element		
3.0	Ground Potential Rise		
3.1	Case 1		
3.2	Case 2		
3.3	Case 3		
4.0	Fault on transmission line		
5.0	Step and Touch Potentials		
6.0	Effect of thin layer of crushed rock		
7.0	Allowable touch and step potentials		
8.0	Design touch and step potentials		
9.0	Influence of cross section		
10.0	Earthing in LV system		
10.1	Case 1: Source grounded, equipment ungrounded		
10.2	Case 2: Source grounded, equipment grounded		
10.3	Case 3: Source grounded, equipment grounded with bonding conductor		
11.0	Earthing in TPN system		
12.0	Earthing in MV resistance grounded system		
13.0	Earthing in MV ungrounded system		
14.0	Conclusion		
15.0	References		
	Comments from Scrutineers and Author's Replies		

Sr. No.	Title of Paper	Year and Month of IEEMA Publication	Pages in IEEMA journal
10	***Restricted Earth Fault Protection Practices***	***January 2006***	***Page 92 to 95***
1.0	Introduction		
2.0	REF vs Differential		
3.0	REF for LV system		
3.1	NCT located after bifurcation		
3.2	NCT located before bifurcation		
3.3	REF with 5CTs		
4.0	REF for MV system		
4.1	Relay location vs Sensitivity		
5.0	REF scheme testing		
5.1	Outline of procedure		
6.0	Case study		
6.1	Line to ground fault		
6.2	Line to Line fault		
6.3	External Fault simulation		
6.4	Internal Fault simulation		
7.0	Conclusion		
8.0	References		
11	***Realistic Specification for Current Transformer***	***Tech-IT Seminar, January 2006***	***Page I-22 to I-28***
1.0	Introduction		
1.1	Equivalent circuit of current transformer		
1.2	Phasor diagram of current transformer		
1.3	CT saturation		
1.4	Voltage developed across CT secondary		
2.0	Current Transformer classification		
3.0	Parameters for current transformer specification		
3.1	Parameters based on application of current transformer		
3.1.1	General protection class		
3.1.2	Special protection class		
3.1.3	Metering class		
4.0	CT Ratio		
4.1	Rated primary current		
4.2	Rated secondary current		
5.0	General protection class		
5.1	Accuracy class		
5.2	Accuracy limit factor (A.L.F)		
5.3	Rated burden		
6.0	Special Protection class		
6.1	Knee point voltage (Vk)		
6.1.1	Fault current for CT sizing		
6.2	Exciting Current (I_{EX})		
6.2.1	Why I_{EX} < 30 mA or I_{EX} < 150 mA?		
6.2.2	I_{EX} to be specified at Vk/4 or Vk /2?		
6.3	Secondary winding resistance (Rct)		
7.0	Metering Class		
7.1	Accuracy Class		
7.2	Instrument security factor (I.S.F)		

Sr. No.	Title of Paper	Year and Month of IEEMA Publication	Pages in IEEMA journal
7.3	Rated burden		
8.0	Conclusion		
9.0	References		
12	***Grounding of Electrical System – Part I***	***May 2006***	***Page 52 to 56***
1.0	Introduction		
2.0	Ungrounded vs Grounded system		
3.0	Difference between Neutral and Ground		
4.0	Ungrounded system (Balanced operation)		
5.0	Ungrounded system (Fault condition)		
6.0	Advantages of ungrounded system		
7.0	Disadvantages of ungrounded system		
8.0	Ground fault detection in ungrounded system		
9.0	Ground fault detection in DC system		
10.0	Ground fault detection in AC system		
11.0	Ground fault detection on ships		
12.0	Single phase PT connection		
13.0	Neutral inversion and ferro-resonance		
14.0	Conclusion		
15.0	References		
13	***Grounding of Electrical System – Part II***	***June 2006***	***Page 51 to 58***
1.0	Introduction		
2.0	Reasons for grounding		
3.0	Grounding locations		
4.0	Grounding methods		
5.0	Measure of grounding effectiveness		
6.0	Solidly grounded system		
6.1	Advantages of solidly grounded system		
6.2	Disadvantages of solidly grounded system		
7.0	Resistance grounded system		
7.1	High resistance grounded system		
7.1.1	Neutral Grounding Transformer (NGT)		
7.2	Low resistance grounded system		
7.3	Comparison between ungrounded and grounded systems		
8.0	Reactance grounded system		
8.1	Advantages of reactance grounded system		
8.2	Disadvantages of reactance grounded system		
9.0	Grounding the bus		
9.1	Zig-Zag grounding Transformer		
9.1.1	Phasor diagram		
9.1.2	Current distribution for ground fault		
9.2	Star-Delta transformer		
9.2.1	Resistor in primary neutral		
9.2.2	Resistor on delta winding		
9.3	Open delta PT grounding		
10.0	Variation of voltage with fault current		

Sr. No.	Title of Paper	Year and Month of IEEMA Publication	Pages in IEEMA journal
11.0	Sequence voltage vs Fault location		
12.0	Peculiar ground fault current distributions		
12.1	No transformer neutral current with ground fault		
12.2	Transformer neutral current without ground fault		
13.0	Conclusion		
14.0	References		
14	***Generator Neutral Grounding Practices***	***August 2007***	***Page 89 to 97***
1.0	Introduction		
2.0	Harmonic and Zero sequence		
3.0	Generators connected to a common bus		
4.0	NGR common to all the units		
5.0	Individual NGR for the units		
6.0	Zig-Zag grounding transformer common to all the units		
7.0	LV generators grounding		
8.0	MV generators grounding		
9.0	High resistance grounding		
10.0	Neutral Grounding Transformer (NGT)		
11.0	Low resistance Grounding		
12.0	Sensitivity of ground fault protection		
13.0	Hybrid grounding		
14.0	Grounding Mix-up		
15.0	NGR enclosure earthing		
15.1	Case 1		
15.2	Case 2		
15.3	Case 3		
16.0	Conclusion		
17.0	References		
	Comments from Scrutineers and Author's Replies		
15	***Evaluation of Generator Parameters by Online Testing***	***February 2008***	***Page 68 to 82***
1.0	Introduction		
2.0	Generator Reactance		
3.0	Inertia Constant (H)		
4.0	Short Circuit Ratio (SCR)		
5.0	Open circuit field time constant (τ'_{do})		
6.0	Generator controls – P-F loop and Q -V loop		
7.0	Governor Controls		
8.0	On line Testing of Generator and Generator controls		
9.0	Scope of tests		
9.1	Tests when unit is in isolated mode (not connected to grid)		
9.2	Tests when unit connected to grid		
10.0	Preparatory steps before starting test sequence		

Sr. No.	Title of Paper	Year and Month of IEEMA Publication	Pages in IEEMA journal
11.0	Analysis		
11.1	Open circuit Test: Saturation curve measurement		
11.2	Short circuit Test: To evaluate generator direct axis synchronous reactance, SCR and transformer reactance		
11.2.1	To determine Transformer reactance at working tap		
11.2.2	To determine direct axis synchronous reactance (Xd) and SCR		
11.3	V curve measurement: To evaluate generator direct axis synchronous reactance		
11.3.1	Evaluation of direct axis synchronous reactance with slope of V curve		
11.3.2	Evaluation of direct axis synchronous reactance with V curve data		
11.4	Partial load Trip tests: To evaluate inertia constant (H)		
11.5	Zero Power Factor Trip tests: To evaluate direct axis reactance (X"d and X'd)		
11.6	Zero Power Factor Trip tests: To evaluate AVR response		
11.7	To evaluate direct axis open circuit time constant (τ'_{do})		
11.7.1	Voltage build up test		
11.7.2	Zero power factor trip test		
11.8	Field breaker trip test		
11.9	Governor step response test (Step change of 2%)		
11.10	Governor step response test (Step change of (-) 25 MW)		
11.11	Governor step response test (Step change of (+) 20 MW)		
12.0	Conclusions		
13.0	Acknowledgement		
16	***Instrument Transformer Testing at site***	***August 2008***	***Page 61 to 72***
1.0	Introduction		
2.0	Current Transformer Testing		
2.1	Summary of Tests		
2.2	IR value measurement		
2.3	Polarity check		
2.4	Excitation (saturation) characteristic check		
2.5	Ratio check		
2.5.1	Voltage measurement method		
2.6	Secondary and lead resistances		
2.7	Secondary injection test		
2.8	Primary injection test		
3.0	Potential Transformer testing		
3.1	IR measurement		
3.2	Polarity checks		

Sr. No.	Title of Paper	Year and Month of IEEMA Publication	Pages in IEEMA journal
3.3	Ratio checks		
3.3.1	Ratio check of star winding		
3.3.2	Ratio check for open delta winding		
3.4	PT secondary injection check		
3.5	PT combined primary and secondary injection check		
3.6	General check for potential transformer		
4.0	Conclusion		
	Comments from Scrutineers and Author's Replies		
17	***Reactive Compensation Fundamentals for Distribution Networks***	***August 2009***	***Page 112 to 115***
1.0	Introduction		
2.0	Simulations		
3.0	Analysis of Results		
3.1	Case 1		
3.2	Case 2		
3.3	Case 3		
3.4	Case 4		
3.5	Case 5		
3.6	Case 6		
3.7	Case 7		
4.0	Concept of compensation		
5.0	Conclusion		
6.0	References		
	Comments from Scrutineers and Author's Replies		
18	***Selection of Current Transformer Parameters for Optimum Design – User Perspective***	***Tech-IT Seminar, January 2010***	***Page II-8 to II-13***
1.0	Introduction		
2.0	Metering CT specification		
2.1	Accuracy class for metering CT		
2.2	Accuracy class and Instrument security factor for metering CT		
3.0	CTs for Unit Protection		
3.1	CT sizing for differential protection of transformer		
3.2	CT sizing for differential protection of motor feeders		
4.0	Selection of Primary Rated Current of CT		
5.0	Conclusions		
19	***Vector Group Testing of Transformer at site***	***August 2010***	***Page 92 to 96***
1.0	Introduction		
2.0	Test Procedure		
2.1	Dyn1		
2.1.1	Site Test Results		
2.1.2	Analytical values		

Sr. No.	Title of Paper	Year and Month of IEEMA Publication	Pages in IEEMA journal
2.2	Dyn11		
2.2.1	Site Test Results		
2.2.2	Analytical values		
2.3	YNd1		
2.3.1	Test Procedure		
2.3.2	Site Test Results		
2.3.3	Analytical values		
2.4	YNd11		
2.4.1	Site Test Results		
2.4.2	Analytical values		
2.5	Dzn10		
2.5.1	Site Test Results		
2.5.2	Analytical values		
2.6	YNzn11		
2.6.1	Site Test Results		
2.6.2	Analytical values		
2.7	YNyn0 / YNyn6		
3.0	Conclusion		
20	***OTI & WTI – What they measure?***	***June 2011***	***Page 86 to 90***
1.0	Introduction		
2.0	Specification		
3.0	OTI & WTI		
4.0	Winding Hot Spot Temperature		
5.0	OTI & WTI Measurement – Conventional and Modern		
6.0	OTI & WTI Alarm & Trip settings		
7.0	Relevance of OTI & WTI in different systems		
8.0	Oil volume		
9.0	Insulation Life		
10.0	Fibre Optic sensors for WTI		
11.0	Conclusion		
12.0	References		
21	***Fault Passage Indicator Application in Distribution Systems***	***March 2013***	***Page 102 to 107***
1.0	Introduction		
2.0	SCADA-DMS		
3.0	Fault Passage Indicator		
4.0	FPI Functional requirement		
5.0	Fault Identification Procedure		
6.0	Number of FPIs on RMUs		
7.0	Sensor installation procedure to minimize mal-operation of FPIs		
8.0	FPI application in non-conventional situations		
9.0	FPI Tester		
10.0	FPI status reporting and FLISR		
11.0	Acknowledgement		
12.0	Conclusion		
13.0	Bibliography		

Sr. No.	Title of Paper	Year and Month of IEEMA Publication	Pages in IEEMA journal
22	***Stator Earth Fault Protection of Large Generator (95%) - Part I***	***May 2013***	***Page 76 to 80***
1.0	Introduction		
2.0	High Resistance Grounding of a Generator		
2.1	Data		
2.2	Calculations		
3.0	NGT sizing and exciter field forcing		
4.0	Earth fault protection for Generator		
4.1	95% Stator earth fault protection		
4.2	100% Stator earth fault protection		
5.0	Acknowledgement		
6.0	References		
23	***Stator Earth Fault Protection of Large Generator (100%) - Part II***	***May 2013***	***Page 81 to 86***
1.0	Introduction		
2.0	100% Stator earth fault with third harmonic measurement		
3.0	100% Stator earth fault with 20Hz Voltage Injection		
4.0	Protection settings		
5.0	Commissioning 100% Stator Earth Fault Protection		
6.0	Caution		
7.0	CBIP recommendations		
8.0	References		
24	***Electrical Protection of Transformers in Large Power plant***	***June 2013***	***Page 84 to 89***
1.0	Introduction		
2.0	Transformer Protections		
2.1	Protection of Generator Transformer (GT)		
2.2	Protection of Station Transformer (ST)		
2.3	Protection of Unit Transformer (UT)		
3.0	Grouping of Protection functions		
4.0	Conclusions and Recommendations		
5.0	Acknowledgement		
6.0	References		
25	***Zig Zag Transformer - Fault Current Distribution, Short Circuit testing and Single Phase loading***	***July 2013***	***Page 84 to 91***
1.0	Introduction		
2.0	Zig Zag connection for Power Transformer application		
2.1	Delta Zig Zag Transformer under Balanced condition		
2.1.1	Fault Current Distribution for balanced and unbalanced faults		
2.2	Star - Zig Zag Transformer under Balanced condition		
2.2.1	Fault Current Distribution for balanced and		

Sr. No.	Title of Paper	Year and Month of IEEMA Publication	Pages in IEEMA journal
	unbalanced faults		
3.0	Zero sequence impedance measurement at site		
4.0	Single phase loading of Zig Zag - Star transformer		
5.0	NGT with / without NGR		
5.1	System Data		
5.2	Case 1 - NGT without NGR		
5.3	Case 2 - NGT with NGR		
5.4	Reason for choosing only NGT and not NGT and NGR		
6.0	Short Circuit Testing of NGT		
6.1	Alternative 1		
6.2	Alternative 2		
7.0	Acknowledgement		
8.0	Conclusion		
9.0	References		
	Appendix 1		
	Comments from Scrutineers' and Author's Replies		
26	***Cable sequence Impedance Measurement at site***	***August 2013***	***Page 84 to 86***
1.0	Introduction		
2.0	Procedure for Sequence Impedance data estimation		
2.1	Equipment required for testing		
3.0	Sequence Impedance Testing		
3.1	Test 1		
3.2	Test 2		
3.3	Test 3		
4.0	Test Results and Impedance Calculations		
5.0	Summary of Test Results		
6.0	Acknowledgement		
7.0	Conclusion		
27	***Methods to control current during Testing of REF and Differential Schemes at site***	***September 2013***	***Page 82 to 87***
1.0	Introduction		
2.0	Outline of Procedure		
3.0	Estimating currents during tests		
3.1	Without external device, adequate current		
3.2	Limiting the test current		
3.2.1	Limiting the current using variac		
3.2.2	Limiting the current using external impedance (cable)		
3.2.3	Limiting the current using external resistor		
3.3	Increasing test current magnitude using capacitor		
3.3.1	Without capacitor, inadequate current		
3.3.2	With series capacitor, Stage 1		

Sr. No.	Title of Paper	Year and Month of IEEMA Publication	Pages in IEEMA journal
3.3.3	With series capacitor, Stage 2		
3.3.4	Chances of series resonance and current shoot up		
3.3.5	Precautions		
4.0	Acknowledgement		
5.0	Conclusion		
6.0	References		
28	***Protection of Low Voltage Auxiliary Transformer and Switchgear***	***December 2013***	***Page 114 to 120***
1.0	Introduction		
2.0	LV System Protections		
2.1	LV Auxiliary Transformer		
2.1.1	HV side (Provided on HT switchgear)		
2.1.2	LV side (Provided on LV switchgear)		
2.2	Breaker controlled outgoing line feeders		
2.3	Fuse controlled outgoing line feeders		
2.4	Breaker controlled outgoing motor feeders		
2.5	Fuse controlled outgoing motor feeders		
2.6	Fuse vs Circuit breaker		
3.0	Standby Earth Fault Protection		
4.0	Location of Neutral CT		
5.0	Choice of breaker for incomer and buscoupler		
6.0	Reverse blocking scheme (EHV and MV systems)		
6.1	Reverse blocking scheme (LV systems)		
7.0	Alternate to REF protection scheme in LV system – Pseudo REF		
8.0	Reverse Blocking scheme Implementation		
9.0	Acknowledgement		
10.0	Conclusions		
11.0	References		
29	***Functional Features of Transformer – Expectations from User Perspective***	***Trafo Tech -14 January 2014***	***Key Note Address***
1.0	Introduction		
2.0	Transformer sizing for nonlinear load applications		
3.0	Short circuit Testing of large power transformers		
4.0	Delta Tertiary – Unnecessary Evil?		
5.0	Zig-zag winding in Power transformer		
6.0	Dry Bushing		
7.0	Paperless winding		
8.0	Green dielectric fluid		
9.0	Low Noise Transformers		
10.0	OLTC Tap Range		
10.1	OLTC Usage		
11.0	Elimination of extra CT for GT differential protection		
12.0	Wish List		

Sr. No.	Title of Paper	Year and Month of IEEMA Publication	Pages in IEEMA journal
30	***Basics of Dual Ratio Transformer***	***February 2014***	***Page 95 to 97***
1.0	Introduction		
2.0	Primary Connection		
2.1	AT Balance		
2.2	V/T Equality		
3.0	Tap size		
4.0	Losses		
5.0	Conclusion		
	Comments from Scrutineers and Author's Replies		
31	***Integrated View of Instrument Transformer and Protection Scheme***	***Tech-IT 2014 Seminar, June 2014***	***Page IIB-26 to IIB-34***
1.0	Introduction		
2.0	Defining Zones of Protection with CT location		
3.0	Dead Zone protection in Numerical Busbar Protection		
4.0	REF protection for Transformers		
4.1	High Impedance REF scheme		
4.2	Low Impedance REF scheme		
4.3	REF for solidly grounded system		
4.4	REF for resistance grounded system		
4.4.1	Case 1: High impedance REF scheme with IPCT for Resistance grounded system		
4.4.2	Case 2: REF scheme without IPCT for Resistance grounded system		
4.4.3	Case 3: Using Low Impedance REF		
4.4.4	Summary for Resistance grounded system		
5.0	Common conceptual fallacy in IPCT reflected impedance		
6.0	References		
32	***Application of Capacitors in Electrical Power Systems***	***CAPACIT 2014 Conference, November 2014***	***Page 177 to 183***
1.0	Introduction		
2.0	Fundamental Principle		
3.0	Concept of Reactive Power and Reactive Power Compensation		
4.0	Power Factor Correction and Reactive Compensation		
5.0	Transients during Capacitor Bank Switching		
5.1	Ideal transient free switching		
5.2	Simulation of ideal capacitor switching		
5.3	Switching of capacitor with small inductor to reduce inrush current		
5.4	Back to Back Capacitor Switching		
6.0	BIL of Inrush Limiting Reactor		
7.0	APFC Switching Studies		

Sr. No.	Title of Paper	Year and Month of IEEMA Publication	Pages in IEEMA journal
8.0	Detection of Single-Phasing in Capacitor Feeder		
9.0	Surge Capacitor		
10.0	Capacitor for Stability Test of Transformer		
11.0	Acknowledgement		
12.0	References		
33	***Power Quality Overview – Practical Aspects***	***May 2016***	***Page 73 to 78***
1.0	Introduction		
2.0	Voltage dips		
3.0	Harmonics		
3.1	Derating of Transformer capacity for harmonic loading at IDC		
3.2	Effect of traction load on power quality		
3.3	LED lights and harmonics		
3.4	Power Quality Standard for Utility Supply		
4.0	Conclusions		
5.0	Acknowledgements		
34	***Parallel Operation of Transformers with Large Non-identical Taps for Reactive Power Compensation***	***June 2016***	***Page 94 to 98***
1.0	Introduction		
2.0	Analysis prior to site testing		
2.1	Permissible tap range to avoid overfluxing		
2.2	Approximate differential voltage estimation		
2.3	Load flow studies		
3.0	Testing at site		
3.1	Measurement of circulating current		
3.2	Measurement of reactive compensation achieved		
3.3	Measurement of MVA		
3.4	Comparison between measured and calculated values		
4.0	Acknowledgement		
5.0	Conclusion		
6.0	References		
35	***Conceptual Clarifications in Electrical Power Engineering – Part 1***	***August 2016***	***Page 69 to 80***
1.0	Introduction		
2.0	Concept of Reactive Power and Reactive Power Loss		
3.0	Regulation and transformer impedance		
4.0	Effectively grounded system		
5.0	Mirror Image Concepts		
5.1	Capacitor and Reactor		
5.2	CBCT and Open Delta PT		
5.3	Phase voltage and Zero Sequence voltage during ground fault		
5.4	Line to ground fault reflection in		

Sr. No.	Title of Paper	Year and Month of IEEMA Publication	Pages in IEEMA journal
	Transformer		
5.5	Disposition of conductor and other metal parts – Single core cable, IPBD and ACSR conductor		
5.6	Transposition – EHV Overhead line and EHV Cable		
6.0	Conclusion		
7.0	References		
36	***Conceptual Clarifications in Electrical Power Engineering – Part 2***	***March 2017***	***Page 65 to 76***
1.0	Introduction		
2.0	Phase Shift and Stability		
3.0	Paralleling and Synchronizing		
4.0	AT Balance Principle in transformer		
5.0	Impedance specification for 3 Single phase transformers vs Three phase transformer		
6.0	Voltage dip for fault on primary		
7.0	Current Unbalance reduction in Delta - Star transformer		
8.0	Conclusions		
37	***Conceptual Clarifications in Electrical Power Engineering – Part 3***	***June 2017***	***Page 80 to 92***
1.0	Introduction		
2.0	Voltage Dip During HT Motor Starting		
3.0	Voltage Drop during LT Motor Starting		
4.0	Locked rotor condition		
5.0	High Impedance Differential Protection of MV motors		
6.0	Protection of MV induction motors against switching surges		
7.0	Loading, Insulation Class and Service Factor (SF)		
8.0	Wound Rotor Induction Motor		
9.0	Conclusions		

ieema journal

Reactive Compensation at Transmission Level

Dr K Rajamani,

Power System Consultants, MUMBAI

(October 1999, IEEMA Journal, Page 26 to 30)

Reactive Compensation at Transmission Level

Dr K Rajamani, Power System Consultants, Mumbai

1.0 Introduction

With the opening of the Indian economy, the industrial sector is experiencing a healthy growth. To meet the power requirements of the growing economy, the power sector has to keep pace with this development. The private sector is entering in the generation area as IPPs (Independent Power Producers). However, the power has to be taken from the generating stations to the load centres through a reliable transmission network. With most of the state networks operating region-wise, secure operation of the network with many parties involved (State Electricity Boards, Private licensees, National Thermal Power Corporation, National Hydro Power Corporation, IPPs, Captive power plants within big industries, wind farms, etc.) is a complex issue. In this regard establishment of NPTC (National Power Transmission Corporation) is a welcome development. With the proposed upgradation of all state and regional LDCs (Load Despatch centres), on line control of the network to avoid potential or impending disasters will be feasible. The present situation in which grid collapses are assumed / inevitable, waiting to happen, may not be acceptable in the future. However, transmission planning has never been given the priority which generation planning always enjoyed. There have been instances when generating stations with huge expenditure have been completed without adequate transmission lines for transfer of power. Even within transmission planning, reactive compensation for existing networks receives less fiscal priority than say, constructing a new line.

2.0 VAR Flow Problems

The reactive power flows from generating stations and other devices to the load centres through 400 kV, 220 kV, 132 kV, subtransmission and distribution networks. This free flow of the reactive power results in undesirable voltage levels in all parts of the network. Unlike active power, which can be sent hundreds of kilometers, it is not practical to transmit reactive power any appreciable distance because of resulting voltage gradient. System voltage is like our body temperature. When the temperature dips to 95° F or increases to 103° F, our body is sending a signal for the impending problem requiring drastic action. However, even when the 400 kV system voltage dips to 350 kV, it does not create such a panic, which it should. The very low voltages at EHV levels make it very difficult to set

October 1999, IEEMA Journal, Page 26 to 30

distance protection especially under heavy load condition. In an ideal situation, the compensation shall be such that irrespective of the magnitude of power flow on the lines, the voltage profile shall be near normal i.e. flat voltage profile. Holding the voltage near normal values increases the transient stability limit of the system allowing the system to handle more power without the threat of instability. A sound and time tested policy in this regard is that every voltage level shall be self sufficient in VAR support even under heavily loaded conditions and reactive flows in the interconnecting transformers should be minimum. This basic flaw in the Indian EHV network planning may be one of the prime reasons for frequent grid collapses due to initiating events, which are not uncommon in other countries. As an example, reactive compensation available at EHV level in USA (NEMA survey, figures upto 1994) is given in Table I. By year 2003, the shunt capacitive compensation for NYPP (New York Power Pool) alone is expected to reach the figures as shown in Table II.

Table I			
kV	**MVAR**		
System Voltage	**Shunt Capacitor**	**Shunt Reactor**	**Series Capacitor**
115-161	38,433	4,774	1,690
230	17,170	4,163	392
345	9,429	18,022	6,370
500	7,544	20,967	34,079
765	0	8,700	0

Table II	
System Voltage (kV)	**Shunt Capacitor (MVAR)**
115-161	37,700
230	24,000
345	8,900

To us it may appear surprising to note the extensive shunt capacitive compensation even at EHV level. But considering the vastness of their network and all pervading interconnections in USA, the above level of compensation is required to assure reliable operation of the network.

Unless the syndrome of one voltage level expecting reactive support from other voltage levels is broken, one of the main causes for grid collapses in India will not be addressed. By conducting load flow studies, the estimate of compensation required can be arrived at. The logs of actual reactive flows on

the interconnecting transformers provide a clue for making initial estimates. The main thrust is to make each voltage levels self-sufficient in reactive.

3.0 VAR Compensation Devices

There are many ways of providing compensation and each has its own advantages and disadvantages. A brief description of some is given below.

3.1 Shunt Reactors

They are generally provided on 400 kV lines as part of a line without separate switching arrangement. They are basically designed to absorb charging MVAR from the line during light load period. When the line carries heavy load, they are a drag on the voltage, as they cannot be independently switched off. Neutral shunt reactor is provided only in case single-phase auto-reclosure is planned for that line; otherwise it does not play any part during system operation.

3.2 Shunt Capacitors

From individual blocks, with series-parallel combination, capacitors even up to 400 kV can be built up and connected to the EHV network. Its advantage is that it is static equipment with no moving parts. Its disadvantage is that when reactive support is most needed, its reactive support is less, as the reactive output from the unit is proportional to the square of applied voltage. If split into different banks, each bank can be switched on or off as per requirements. For EHV capacitor closing, recent trend is to use point on wave closing of breaker (in addition to preinsertion resistors) so that inrush currents during switching is minimized.

3.3 Synchronous Condensers

This is conventional synchronous machine but for producing only reactive power. It is a rotating equipment. With the advent of brushless synchronous condensers, the maintenance requirement is low. Its advantage is that when the voltage is low, it naturally pushes more reactive into the system and when the voltage is high, it absorbs reactive from the system. Incidents of voltage collapse have been reported in USA, Japan, France, Sweden and Canada in the recent past. Some system planners believe that more use of synchronous condensers than capacitors could have mitigated these problems. One other advantage, which has not been emphasized, especially in the Indian context, is its stored energy (H). When the system islands or about to collapse, the first second is very important and the rate of change of frequency (df/dt) decay in this period determines where the system is heading. The only

countermeasure available during this period is the kinetic energy (H) stored in the rotating masses of generating units. If H for the system is high, df/dt will be low and vice versa. Though synchronous condensers are meant for producing reactive power, by providing a large fly-wheel, its H can be increased and will increase the net system inertia. By introducing a gear between the synchronous condenser (similar to between high-speed gas turbine and low speed generator), the speed at which the flywheel rotates can be made higher which increases H substantially as it is proportional to the square of the speed. Conversely the weight of the flywheel can be lower for the same H with the provision of the gear. An extra support for the rotor between the machine and the flywheel may be needed but this is not a major issue. If a very large number of High Inertia Brushless Synchronous Condensers (HIBSC) are used for reactive compensation at all voltage levels, it will enhance the system stability during the crucial first one second after a major system disturbance. The system planners should seriously consider this alternative in view of the frequent grid collapses in India. The utilities can jointly standardize the unit ratings (i.e. 25 MVA, 50 MVA, etc with H = 8 sec,…) and starting methods so that manufacturers can offer off-the–shelf tested designs expeditiously. The voltage ratings of synchronous condensers typically range from 6.6 kV to 15kV. Hence connection to EHV network needs step-up transformers. But with the recent introduction of Extra High voltage Synchronous machines, the condensers can be directly connected to the EHV network without step-up transformers. This may be one of the interesting applications for Extra High Voltage Synchronous machines especially for problem prone grids like in India.

3.4 Statcons

Static Condenser is a static version of synchronous condenser and is part of the family of FACTS (Flexible AC Transmission System) devices. Since they are just now introduced in the market with very limited operating experience, they may not find favour with Indian utility planners at this moment.

3.5 Static VAR Device (SVD)

Static VAR Device is also a part of FACTS family. The most popular configuration is FC + TCR (Fixed Capacitor and Thyristor Controlled Reactor). This static device imitates a synchronous condenser (without its H) in that it can supply both leading and lagging VARS as per requirements. By controlling the firing angle of TCR, reactive output from the unit can be varied

over a wide range. Since the voltage rating of thyristor is limited, SVD is generally connected to the network at 33 kV or below.

4.0 Note on OLTC

There is a widespread belief that OLTC (On Load Tap Changer) is a magic pill for voltage control. But use of OLTC by itself does not produce reactive power and the voltage control is obtained by rescheduling reactive flows. For example, in an industrial plant, operation of tap changer of a plant transformer to improve the down stream voltage may increase the reactive draw from the grid. OLTC by itself can not be a substitute for sound reactive compensation. In this context the following comments may be pertinent:

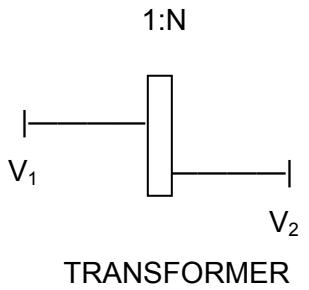

Let the allowable operating voltage range be 90% to 110%.

(i) If $V_1 < 90\%$ or $V_2 < 90\%$: Add capacitor.

(ii) If $V_1 > 110\%$ or $V_2 > 110\%$: Add reactor.

(iii) If $110\% > V_1 > 90\%$ and $110\% > V_2 > 90\%$: ,

(a) If $V_2 > V_1$ Decrease N

(b) If $V_2 < V_1$ Increase N

The function of OLTC is to obtain near normal voltage (say 100%) *when the voltages in the beginning are within the range of say, 90% to 110%.* If the voltages are outside the range from the beginning, shunt compensation shall be switched on before OLTC operates. *Indiscriminate operation of OLTC without adequate reactive support is claimed to be one of the principle causes for voltage collapse.*

5.0 Conclusions

The main objective of this article is to refocus out attention on reactive compensation at EHV level. For too long reactive planning has remained in the background. Even under the limited reactive planning, the main action has been to provide a few shunt reactors at 400 kV level and capacitors at distribution levels. With the evolving complexity of regional power networks, it is essential to provide compensation at every transmission level so that one voltage level does not overburden the other levels to ensure security under

severe system disturbances. Though static capacitors are in wide use, a strong plea to consider high inertia brushless synchronous condenser as another important alternative in the Indian context is made.

October 1999, IEEMA Journal, Page 26 to 30

Comments from Scrutineers' and Author's Replies

1.0 Scrutineers' Comment

A few references be given for further reading.

Author's Reply

The references may be useful for understanding VAR compensation alternatives:

(i) Reactive Power Control in Electric Power System, T J E Miller, John Wiley, 1982;

(ii) Static shunt Devices for Reactive Power Control, CIGRE 31-08, 1974;

(iii) Power Electronics as a Work Horse for Power Systems, IEEE Spectrum, July 1985.

2.0 Scrutineers' Comment

Some data on prevailing Indian practice be given.

Author's Reply

Except for providing shunt reactors at EHV level and shunt capacitors at distribution level, as mentioned in the article, there is no concerted effort for reactive flow control. Of course some utilities may have initiated some action in this regard but this is more an exception than rule. Finally the proof of the pudding is the voltage profile, which presently can be anywhere between 80% to 120% even at the network level, but the saddest part is that this band is accepted as normal.

ieema journal

Effect of Tap Changing on Reactive Flow

Dr K Rajamani and H C Mehta,

Power System Consultants, MUMBAI

(June 2001, IEEMA Journal, Page 40 to 44)

Effect of Tap Changing on Reactive Flow

Dr K Rajamani and H C Mehta, Power System Consultants, Mumbai

1.0 Introduction

With the opening of the Indian economy, the industrial sector is experiencing a healthy growth. To meet the power requirements of the growing economy, the power sector has to keep pace with this development. The private sector is also entering in the generation area as IPPs (Independent Power Producers). With the growing size of the power networks, maintaining the integrity of the network even under normal conditions is an arduous task. In this context, managing not only the flow of active power but also the reactive power assumes great importance. With more IPPs coming on the grid whose main interest will be the production of active power to the maximum extent possible with minimum participation in reactive generation or absorption, network voltage control may be a challenging task. There is also a widespread misconception that transformer tap changer is a 'panacea' for voltage control. In fact it has been reported that, one of the principal reasons for voltage collapses that have occurred in Japan, Europe and USA, is the indiscriminate operation of OLTCs (On Load Tap Changers). In this paper, a brief review of the effect of tap changing on reactive output from generators is given.

2.0 Simulation Results

A simple system for illustrating the concepts is shown in Figure 1. The generator is connected to the system through a GT (Generator Transformer) and a transmission line. The generator terminal voltage is V_G, the high side voltage is V_T and the system voltage is V_S. Many GTs in practice are not provided with OLTCs but some are provided with OLTCs anticipating better voltage control and also enable the units to synchronise with the system even if the system voltages are *not* near normal. Though only one unit is shown for simplicity, it may be considered as a group of generators running in parallel with the system through interconnecting transformers. System component models are described in Ref [1]. Seven case study results are shown.

June 2001, IEEMA Journal, Page 40 to 44

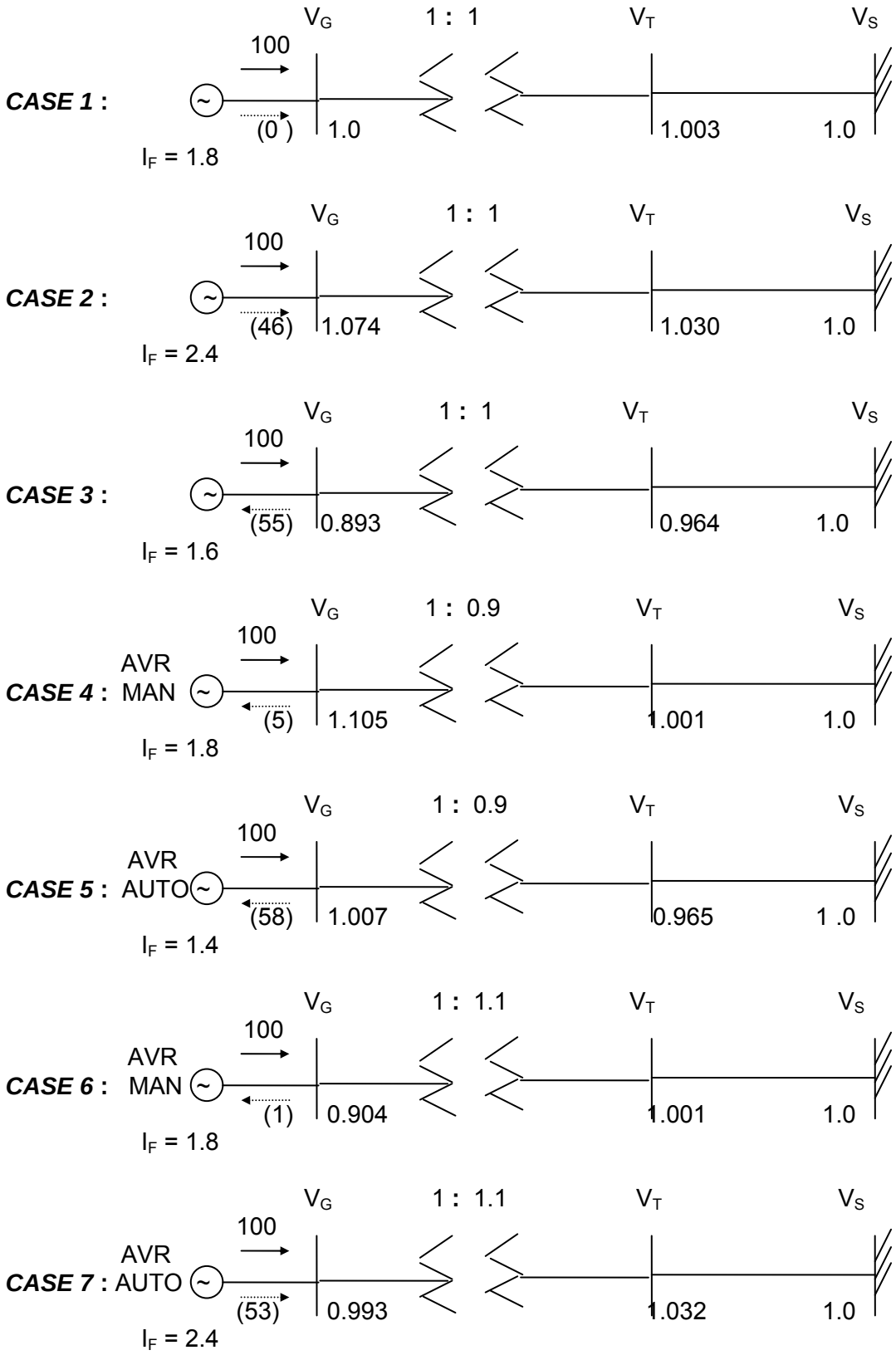

Fig 1 Sample System

2.1 Case 1

The unit is generating 100 MW (shown in solid arrow) with negligible reactive output (shown in dotted arrow). For this unity power factor operation, the field current required is 1.8 pu. The transformer is on nominal tap (1.0 pu). All the three voltages are near 1.0 pu.

2.2 Case 2

This is same as case 1 with only the field current increased to 2.4 pu. The transformer is still on nominal tap. As expected, the reactive output from the unit has increased to 46 MVAR, the terminal voltage has increased to 1.074 pu and there is a corresponding increase in high side voltage. (Though, in practice, the generator terminal voltages are maintained between 0.95 to 1.05 pu, these ranges have been exceeded in the simulation to bring out the effect of tap changing more clearly).

2.3 Case 3

This is the same as case 1 with the field current now decreased to 1.6 pu. The transformer is still on nominal tap. As expected, the unit absorbs 55 MVAR reactive power. The terminal voltage has decreased to 0.893 pu and there is a corresponding decrease in high side voltage.

2.4 Case 4

This is same as case 1 with the OLTC tap changed to -10% (0.9 pu) to *reduce* the voltage on the high side of transformer. Let us assume that AVR (Automatic Voltage Regulator) is on 'Manual' mode. The field current remains the same as 1.8 pu. The high side voltage is more influenced by the system and does not decrease much (1.001 pu). Since the tap has now been changed, with the high side voltage not reducing appreciably, the generator terminal voltage rises by more than 10% (1.105 pu). The unit absorbs small reactive power (5 MVAR).

If the machines are on VAR control mode (the reactive output maintained at the set point value), as IPPs generally wish to operate, the tap changing may have exactly the opposite effect. Comparing the results of Case 1 and Case 4, where the reactive outputs are almost the same, reducing the tap *increases* the generator terminal voltage instead of *reducing* the high side voltage and may lead to tripping of the unit on over voltage.

2.5 Case 5

This is same as case 4 with the AVR in 'Auto' mode to maintain the generator terminal voltage near 1.0 pu. The field current decreases to 1.4 pu. The high

side voltage now decreases to 0.965 pu. The unit absorbs large reactive power (58 MVAR).

It may be instructive to compare the results with Case 3. The high side voltage is almost the same in both the cases, but in Case 3 the transformer is on nominal tap while in Case 5, it is on -10% tap. Though the generator terminal voltages are different in both the cases, the reactive absorption is almost the same.

In Case 3, unless the terminal voltage is deliberately brought down below acceptable limit, it is not possible to absorb large reactive power. But in Case 5, with terminal voltage near normal, it is possible to absorb large reactive power; *this is in fact not good as it may lead to unit tripping on loss of field protection*.

The results of Cases 4 and 5 lead one to exercise extreme caution when l*owering* the tap of generator transformer as it may lead to unit trip either on over-voltage or loss of field protection.

2.6 Case 6

This is same as case 1 with the OLTC tap changed to +10% (1.1 pu) to *increase* the voltage on the high voltage side of the transformer. Let us assume that AVR is on 'Manual' mode. The field current remains the same as 1.8 pu. The high side voltage is more influenced by the system and does not change much. Since the tap has now been changed, with the high side voltage not *increasing*, the generator terminal voltage *falls* by more than 10% (0.904 pu). The unit absorbs small reactive power (1 MVAR).

Similar arguments given under Case 4 hold good here also regarding VAR control mode operation (compare the results of Case 1 and Case 6).

2.7 Case 7

This is same as case 6 with the AVR in 'Auto' mode. The field current increases to 2.4 pu to maintain the generator terminal voltage near 1.0 pu. The high side voltage now increases to 1.032 pu. The unit generates large reactive power (53 MVAR).

It may be interesting to compare the results of this case with Case 2. The high side voltage is almost the same in both the cases, but in Case 2 the transformer is on nominal tap while in Case 7, it is on +10% tap. Though the generator terminal voltages are different in both the cases, the unit generates large reactive power in both the cases.

The usefulness of specifying 'inherent tap' for GT is now evident. If the generator voltage is 11 kV and system voltage is 132 kV, it is desirable to

specify the no load voltage ratio of GT as, say, 11/138 kV. In this case, the 'inherent' tap is 4.6 % (138/132), almost accounting for full load regulation. Here the terminal voltage of the generator need not be *raised very high* to generate substantial reactive power.

3.0 Remarks

Some large industries have their own captive power plants, which are interconnected with the grid supply. Some of these inplant generators are provided with GTs having OLTCs. It may appear 'appealing' to go for a large tap range (e.g. +10% to -10%) to have better control over plant voltages. But from the above analysis, it can be seen that the operation of OLTC is closely linked with the reactive capability of the units. Most of the excitation systems of the units are provided with OEL (Over Excitation Limiter) and UEL (Under Excitation Limiter). OEL is set to limit the reactive output from the generator to prevent rotor over heating. UEL is set to limit the reactive absorption by the unit so that the stability of the unit is not endangered. For a high positive or negative tap of OLTC, the units may hit any of these limits and no further increase or decrease of reactive power from the units can be achieved. The resulting voltages profile may not be as 'good' as the operator has anticipated. *In fact the OEL and UEL settings may make some of the taps on OLTC superfluous, as operation with these taps may not be practical*.

The following observations are made with special reference to captive units operating in industrial plants:

(i) The UEL and OEL settings vis a vis the capability curve of generator shall be verified at site at the time of commissioning and periodically.

(ii) If the unit trips on over-voltage (59) or loss of field protection (40) protection, it is necessary to review the operation of AVR control modes and tap changer before suspecting wrong relay operation.

(iii) The modern AVRs have a voltage range of –15% to +10% instead of the conventional range of ±5%. This feature will enable the unit to be synchronised even if the system voltage is not near normal.

(iv) Since the weakest link of transformer is the tap changer, it is not desirable to have OLTC for generator transformer. If the transformer is provided with OLTC, the operator shall be more cautious when reducing the tap.

(v) The no load voltage ratio of transformer must be so chosen to account for partly or fully the regulation (e.g. 6.6 kV / 34.5 kV connecting 6.6 kV generator to 33 kV system).

(vi) For off circuit taps, it may be more beneficial to specify the tap range as –2.5% to 7.5% instead of ±5%. The operating tap can in general be set at +2.5%. This will enable large reactive generation from the unit without keeping the generator terminal voltage excessively high.

The distribution systems in India generally suffer from poor voltage profile. To improve downstream voltages, many times tap changing on distribution transformer is attempted. This requires increased reactive flow from upstream side resulting in further dip in upstream voltages. The nearest source of reactive power is shunt capacitor in the vicinity. But with the drop in system voltage, the reactive output from the capacitor reduces in square proportion. The expected improvement in voltage profile thus never materialises. In this context, it may be more advantageous to use small capacity (say 1 to 10 MVAR) brushless synchronous condensers which 'naturally' push more reactive power when the voltage is below normal.

The above results bring out an important fact to the notice of practicing engineers that tap changing, by itself, will not lead to better voltage profile. Ultimately the reactive power must come from a source (generator, condenser, capacitor, etc.,) to improve the voltage. If there are constraints on reactive generation or reactive flow, operation of OLTCs may in fact deteriorate the situation and may lead to voltage collapse. *OLTC can not be a substitute for sound reactive power planning*.

4.0 Conclusion

A brief review of the effect of tap changing on reactive rescheduling is presented here. The significance of operation of AVR in manual and auto mode and the operation of OEL and UEL when tap changing is effected are brought out. The material presented here may be helpful to the plant engineers in appreciating voltage control and associated reactive flow problems.

5.0 References

[1] P. M. Anderson and A. A. Fouad, 'Power system control and stability', Iowa State University Press, 1981.

ieema journal

Grounding Transformer Specification without Ambiguity

Dr K Rajamani and H C Mehta,

Power System Consultants, MUMBAI

(August 2001, IEEMA Journal, Page 52 to 54)

ieema journal

Grounding Transformer Specification without Ambiguity

Dr K Rajamani and H C Mehta, Power System Consultants, Mumbai

1.0 Introduction

It is a well-known practice to use zig-zag transformer to ground a bus fed by an ungrounded system. Though the evaluation of zig-zag impedance is straight forward, many times confusion arises when specifying the same to the vendor. The vendor must clearly understand what the user 'really' wants; otherwise he may supply equipment that may not meet user's requirements. This article clarifies some of the finer points involved in zig-zag transformer design, specification and testing to ensure clear understanding between the user and the vendor.

2.0 Case Study 1 (without NGR)

Consider an ungrounded system, which is to be grounded through grounding transformer. The system voltage is 34.5 kV and three phase fault level is 525 MVA. The ground fault current is to be limited to 5500A.

Choose MVA_{BASE} = 100 MVA

V_{BASE} = 34.5 kV

$$Z_{base} = \frac{34.5^2}{100}$$

$$= 11.9025\ \Omega$$

$$I_{base} = \frac{100}{\left(\sqrt{3}\ x\ 34.5\right)}$$

$$= 1.6735\ kA$$

$$I_F = 5500\ A$$

$$I_F = \frac{5.5}{1.6735}$$

$$= 3.2866\ pu.$$

August 2001, IEEMA Journal, Page 52 to 54

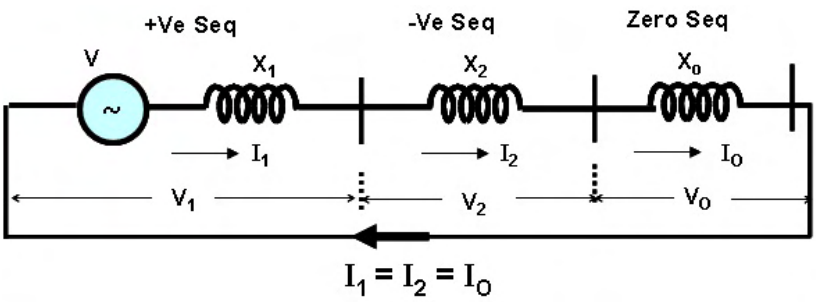

Fig 1

From theory of symmetrical components (Fig.1),

$$I_F = 3I_0$$

$$I_0 = \frac{I_F}{3}$$

$$I_0 = \frac{3.2866}{3}$$

$$= 1.0955 \text{ pu}$$

$$I_0 \text{ in A} = I_0 \text{ in pu} \times I_{base}$$

$$= 1.0955 \times 1.6735 \text{ kA}$$

$$= 1.833 \text{ kA}$$

Positive sequence impedance of system in pu,

$$X_1 = \frac{\text{Base MVA}}{\text{Fault MVA}}$$

$$= \frac{100}{525}$$

$$= 0.1905 \text{ pu}$$

Negative sequence impedance of system in pu, $X_2 = 0.1905$ pu

From Fig.1,

$$I_0 = \frac{1.0}{(X_1 + X_2 + X_0)}$$

$$= \frac{1.0}{(0.381 + X_0)}$$

$$= 1.0955 \text{ pu}$$

Zero sequence impedance in pu, $X_0 = 0.5318$ pu

Zero sequence impedance in ohms, $X_0 = X_0$ *in pu* $x\, Z_{base}$ *in ohms*

$$= 0.5318 \; x \; 11.9025$$
$$= 6.3299\,\Omega / \text{phase} \quad \text{..... (1)}$$

Notional 3ϕ rating of grounding transformer

Rating $= \sqrt{3}\; x\; V\; x\; I_0$

$$= \sqrt{3}\; x\; 34.5 \; x\; 1.833$$
$$\approx 110 \text{ MVA}$$

On 110 MVA Base, Zero sequence impedance of grounding transformer,

$$X_0 = \frac{110}{100} \; x \; 0.5318$$
$$= 0.585 \text{ pu}$$

$$X_0 = 58.5\,\%$$

$$Z_{base} = \frac{34.5^2}{110}$$
$$= 10.8205\,\Omega$$

Zero sequence impedance in pu, $X_0 = 0.585$ *pu*

Zero sequence impedance in ohms, $X_0 = X_0$ *in pu* $x\, Z_{base}$ *in ohms*

$$= 0.585 \; x \; 10.8205$$
$$= 6.3299\,\Omega / \text{phase} \quad \text{..... (2)}$$

(Same as obtained previously in (1))

The cause for ambiguity and confusion arises from calculation of fault current from ohmic or percentage value (Fig.2).

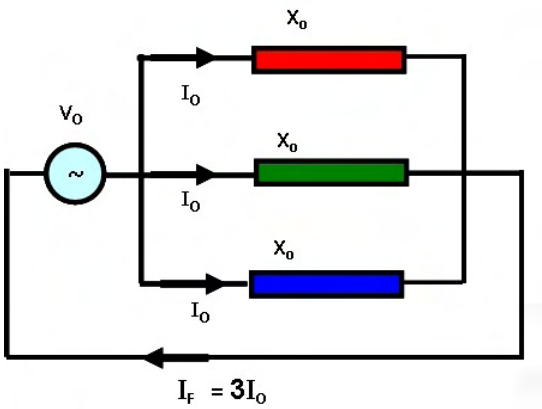

Fig 2

The common (wrong) method is as follows:

$$V_0 = 1.0\ pu$$
$$= \frac{34.5}{\sqrt{3}} kV$$
$$= 19.9186\ kV$$

$$I_F = \frac{V_0}{\left(6.3299/3\right)} kA$$ which is wrong.

$$= 9.4404\ kA$$

The mistake above is to consider the voltage, $V_0 = \frac{34.5}{\sqrt{3}} kV$

This is true only if source is infinite bus (source impedance is zero, i.e. $X_1 = X_2 \cong 0$). From Fig. 1,

$$V_0 = 1.0 - \{(X_1 + X_2)\ I_0\}$$
$$= 1.0 - (0.381 \times 1.0955)$$
$$= 0.5826\ pu.$$

$$V_0 = 0.5826 \times \frac{34.5}{\sqrt{3}}\ kV$$
$$= 11.6046\ kV$$

The correct method for current calculation (Fig.2):

$$I_F = \frac{V_0}{\left(6.3299/3\right)} kA$$
$$= \frac{11.6046}{\left(6.3299/3\right)}$$ which is correct
$$= 5.5\ kA$$

If the user specifies only voltage (34.5 kV) and the fault current as (5.5kA), the vendor will assume infinite bus and will offer

$$X_0 = \left(\frac{34.5}{\sqrt{3}}\right) \Big/ \left(\frac{5.5}{3}\right)$$ which is wrong.

$$= 10.8647\ \Omega / phase$$

If the zig-zag transformer with above value is connected to the actual system, the fault current will be much less than anticipated figure of 5.5kA as can be seen here:

$$X_0 = \frac{10.8647}{11.9025} \quad \text{on 100 MVA Base}$$
$$= 0.9128\ pu$$

$$I_0 = \frac{1.0}{(X_1 + X_2 + X_0)}$$
$$= \frac{1.0}{(0.381 + 0.9128)}$$
$$= 0.7729\ pu$$

$$I_F = 3\ I_0$$
$$= 3 \times 0.7729$$
$$= 2.3187\ pu$$

$$I_0\ in\ A = I_0\ in\ pu \times I_{base}$$
$$= 2.3187 \times 1.6735\ kA$$
$$= 3.88\ kA$$

Ground fault relay co-ordination may be affected in this case.

Hence, to avoid confusion and add clarity to the specification, the following may be included in the specification:

Type : Zig-Zag grounding transformer

Voltage : 34.5 kV

Rating : 110 MVA for 10 sec

Zero sequence reactance X_0 = 58.5% (6.3299 Ω / Phase)

We saw earlier that when voltage V_0 = 11.6046 kV is applied, the resultant neutral current is 5.5 kA.

During shop testing, (Fig.2) when Zero sequence (single phase) voltage of 230V is applied, the neutral current shall be:

$$I_N = \frac{5500 \times 0.230}{11.6046}$$
$$= 109\ A$$

3.0 Case Study 2 (with NGR)

The system shown for simulation is shown in Fig.3.

The 415V generator is connected to 11 kV system through star – delta transformer. It is now proposed to ground 11 kV system through zig-zag grounding transformer to limit ground fault current to with in 100A.

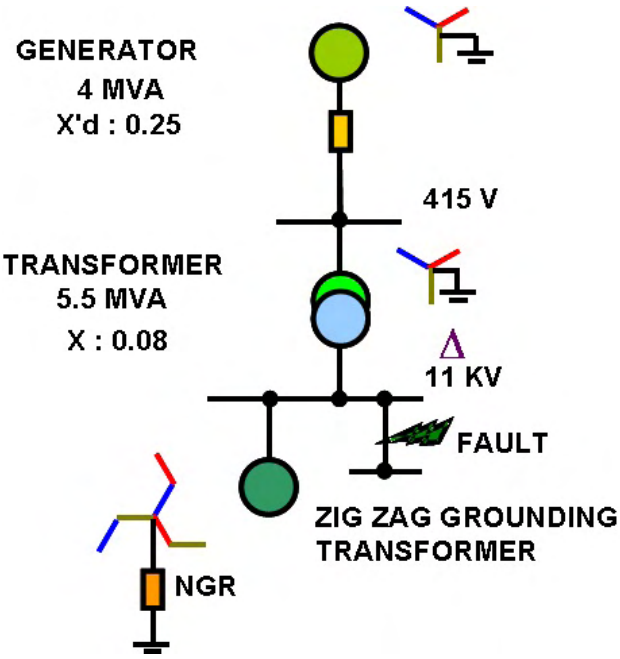

Fig 3

Choose 10 MVA base.

$$Z_{base} = \frac{11^2}{10}$$
$$= 12.1\ \Omega$$

$$I_{base} = \frac{10}{\left(\sqrt{3}\ x\ 11\right)}$$
$$= 524.8\ A$$

$$I_F = 100\ A$$

$$I_F = \frac{100}{524.8}$$
$$= 0.1906\ pu$$

$$I_0 = \frac{I_F}{3}$$
$$= \frac{0.1906}{3}$$
$$= 0.0635\ pu$$

Converting generator and transformer impedances on 10 MVA base

$$Z_G = 0.25\ x \left(\frac{10}{4}\right)$$
$$= 0.625\ pu$$

$$Z_T = 0.08 \ x \left(\frac{10}{5.5}\right)$$

$$= 0.1455 \ pu$$

$$Z_1 = Z_2$$

$$= (0.625+0.1455)$$

$$= 0.7705 \ pu$$

From Fig.1,

$$I_0 = \frac{1.0}{(Z_1 + Z_2 + Z_0)}$$

$$= \frac{1.0}{(1.541 + Z_0)}$$

$$= 0.0635 \ pu$$

$$Z_0 = 14.2070 \ pu$$

It is not possible to use only grounding transformer to obtain Z_0 of 1420%. The other feasible alternative is to connect a resistor in the neutral. It is obvious that compared to requirement of Z_0, the values of $Z_1$and Z_2 are negligible and can be ignored.

From symmetrical component theory, if resistor R is connected in the neutral circuit, $Z_0 = 3 \ R_N$.

$$R_N = \frac{Z_0}{3}$$

$$R_N = \frac{14.2070}{3}$$

$$= 4.7357 \ pu$$

$$R_N \ in \ \Omega = R_N \ in \ pu \ x \ Z_{base}$$

$$= 4.7357 \ x \ 12.1 \ \Omega$$

$$= 57.3 \ \Omega$$

In this case, as Z_0 >> Z_1 or Z_2, entire voltage is dropped only in zero sequence network (Fig.1) compared to only 58.26% in Case Study 1.

Summarising,

Notional rating of zig-zag transformer = $\sqrt{3} \; x \; 11 \; x \left(\frac{100}{3}\right)$

$= 635 \; kVA$

It is customary to choose X_0 reactance value as typically $3 \; x \; X_1$ i.e. 2.3115 pu on 10 MVA base.

On 635 kVA base, reactance

$$X_0 = 2.3115 \; x \left(\frac{0.635}{10}\right)$$

$$= 0.1468 \; pu$$

$$\cong 15\%$$

$$X_0 = 2.3115 \; x \; 12.1$$

$$= 27.9692 \; \Omega / phase$$

During testing, when Zero sequence (single-phase) voltage of 230V is applied, the neutral current shall be (Fig.2),

$$I_N = \frac{230}{\left(27.9692/3\right)}$$

$$= 24.7 \; A$$

The Neutral grounding resistor = 57.3 Ω and rated for 11/√3 kV.

4.0 Conclusion

This article discusses some of the subtle points to be considered when specifying the parameters for zig-zag grounding transformer. If these points are considered the vendor has a clear understanding of user's requirements and will supply the correct equipment accordingly.

5.0 References

[1] J&P transformer Handbook, 1995.

[2] Symmetrical components for power systems engineering – J. Lewis Blackburn.

[3] IEEE guide for application of neutral grounding in electrical utility systems, Part IV – Distribution, 1991.

ieema journal

Directional Over Current Relay Operation and Tariff Metering under Bi-Directional Power Flow Conditions

Dr K Rajamani,

Power System Consultants, MUMBAI

(August 2002, IEEMA Journal, Page 28 to 36)

ieema journal

Directional Over Current Relay Operation and Tariff Metering under Bi-Directional Power Flow Conditions

Dr K Rajamani, Power System Consultants, Mumbai

1.0 Introduction

The quality and reliability of power supply from utilities in India are far from internationally accepted norms. The cost of grid power is also higher. Indian industries, faced with the grim situation, are putting up captive power plants to meet partly or fully their power requirement. The captive units generally operate in parallel with the grid. Depending on local generation and load, the plant (CPP) may import or export power to the grid (G). At the point of interface between the grid and CPP, real and reactive power flow can be in either direction. One of the protective elements provided on the incoming grid line is directional over-current (DOC) relay. This can be either as an independent element or as part of an 'islanding scheme'. This article explains the relationship among real power, reactive power and current under bi-directional power flow conditions. With this background, a procedure for ensuring that phase directional over current relay looks at the intended direction is given. The paper further discusses intricate details in tariff metering under bi-directional four quadrant operation.

2.0 Import – Export diagram for bi-directional power flow

The following symbols are used in Fig 1:

P : Real power (MW)

Q: Reactive power (MVAR)

S: Apparent power (MVA)

I_P : Phase current

V_P : Phase voltage

IMP : Import into CPP bus from Grid bus

EXP : Export from CPP bus to Grid bus

The voltage – current - power relationships for different operating conditions are as follows:

(i) I_P lags V_P by $0 < \theta < 90°$; P & Q are imported.

(ii) I_P lags V_P by $90° < \theta < 180°$; P is exported & Q is imported.

(iii) I_P leads V_P by $0 < \theta < 90°$; P is imported & Q is exported.

(iv) I_P leads V_P by $90° < \theta < 180°$; P & Q are exported.

August 2002, IEEMA Journal, Page 28 to 36

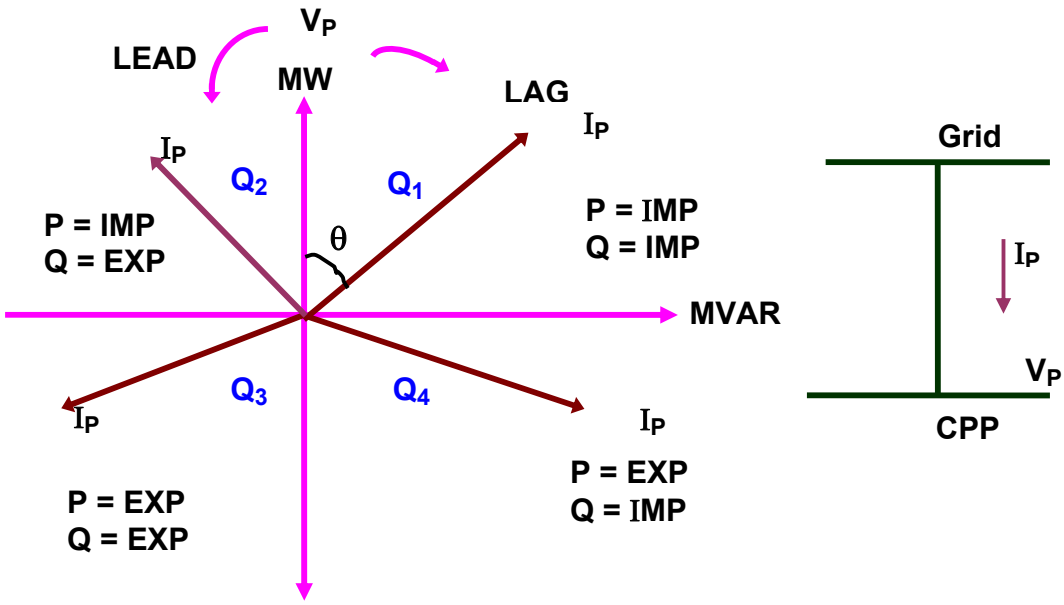

Fig 1 Import – Export Diagram

3.0 Directional Over-current Relay

Assume the directional relay is located at CPP and 'expected' to look towards Grid. Refer Fig 2.

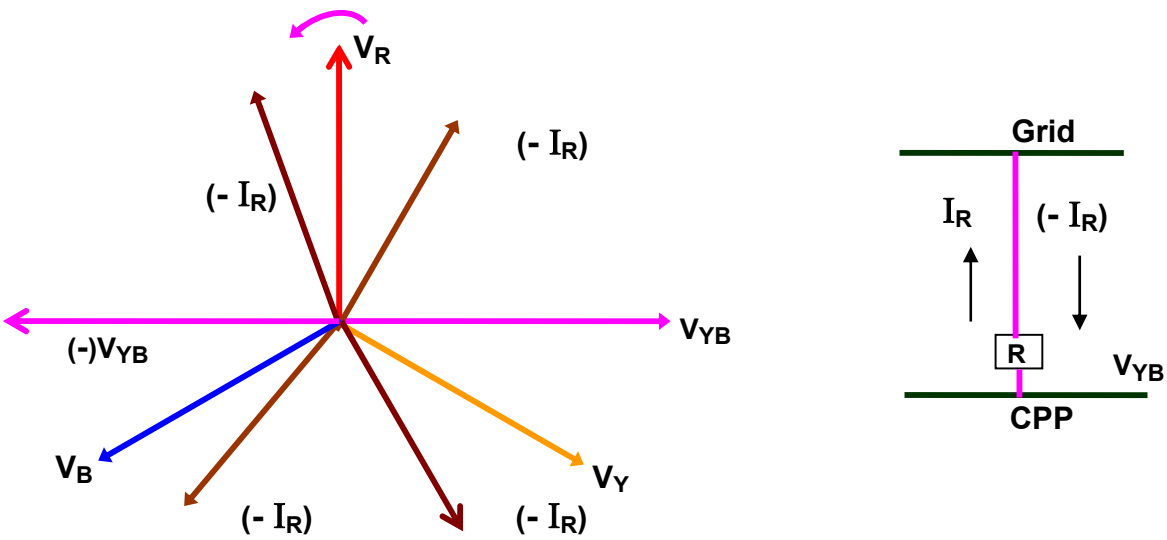

Fig 2 Directional Over current: Sensing current - I_R and Sensing voltage - V_{YB}

The most popular scheme is to use phase current and line voltage (e.g. I_R and V_{YB}).

The phasor diagram is drawn with - I_R so that the results of Fig 1 can be directly used.

From careful study of both these figures, Power – Current relationship listed in Table 1

can be derived. The relay operation shall be studied with respect to parameters given in last column of Table 1. The relay characteristics for MTA of 45° is shown in Fig 3.

Table 1: Power – Current Relationship					
QUA	**P**	**Q**	**($-I_R$) Leads / Lags V_R**	**($-I_R$) Leads / Lags V_{YB}**	**I_R Leads / Lags V_{YB}**
Q^1	I	I	Lags by $0 < \theta < 90$	Leads by $0 < \theta < 90$	Lags by $90 < \theta < 180$
Q^2	I	E	Leads by $0 < \theta < 90$	Leads by $90 < \theta < 180$	Lags by $0 < \theta < 90$
Q^3	E	E	Leads by $90 < \theta < 180$	Lags by $90 < \theta < 180$	Leads by $0 < \theta < 90$
Q^4	E	I	Lags by $90 < \theta < 180$	Lags by $0 < \theta < 90$	Leads by $90 < \theta < 180$

P, Q $\Rightarrow$ I : Import; E : Export

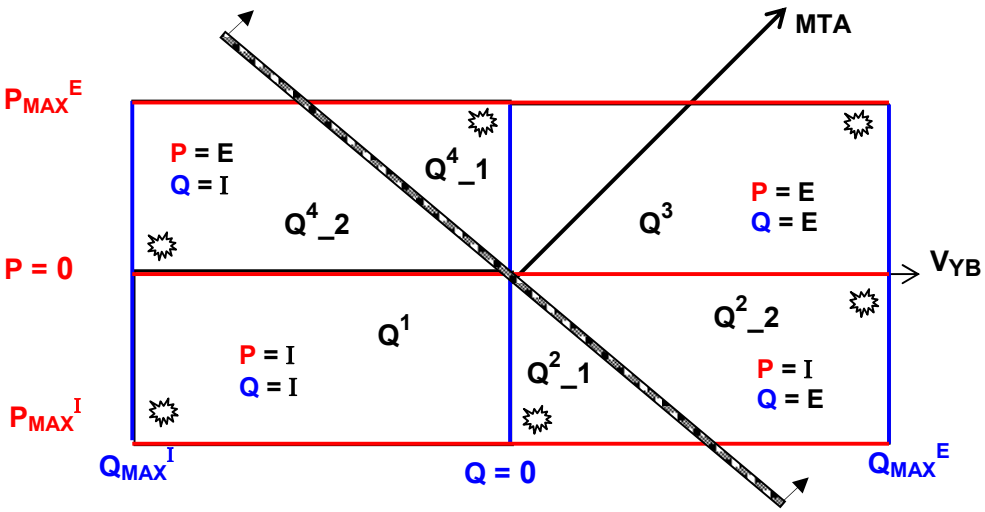

Fig 3 Directional Relay Characteristics

4.0 Steps in verifying correct relay operation

The captive generating units are connected to the CPP bus. By controlling the load and changing the real and reactive generation of captive units, the power flow through the tie line to the Grid can be varied enabling one to verify the directional relay operation. Assume that CT polarity is correct (current to the relay is I_R not **-** I_R) and PT polarity is correct (voltage to the relay is V_{YB} not **-** V_{YB}).

(i) Step 1

Maximize the import of *both* Q and P from Grid to CPP. The relay should *not* pick up (Quadrant - Q^1). In this case, captive units are either shut down or

operate at very minimum power level. The target point is shown as star (✵) in Fig 3.

(ii) Step 2

Keep the export of Q from CPP to Grid at minimum. Keep the import of P from Grid to CPP at maximum. The relay should *not* pick up (Quadrant - Q^2_1).

(iii) Step 3

Keep the export of Q from CPP to Grid at maximum. Keep the import of P from Grid to CPP at minimum. The relay *should* pick up (Quadrant - Q^2_2).

(iv) Step 4

Maximize the export of *both* Q and P from CPP to Grid. The relay *should* pick up (Quadrant - Q^3). In this case, captive units operate at maximum power level.

(v) Step 5

Keep the import of Q from Grid to CPP at minimum. Keep the export of P from CPP to Grid at maximum. The relay *should* pick up (Quadrant - Q^4_1).

(vi) Step 6

Keep the import of Q from Grid to CPP at maximum. Keep the export of P from CPP to Grid at minimum. The relay should *not* pick up (Quadrant - Q^4_2).

(vii) Step 7

If the relay operation is not as anticipated, change either CT polarity or PT polarity and repeat steps from (1) to (6).

During external fault conditions in the grid, the voltage and real power level (P) will be low; however large reactive power (Q) flows towards grid. Under this condition, I_R lags V_R by nearly 90° and will be almost in line with V_{YB} (Quadrant Q^3 or Q^2_2). The correct relay operation is thus ensured.

To avoid spurious operation under healthy bi-directional flow conditions and positive pick up for external fault conditions, the over current setting (I_{SET}) shall meet the following:

I_{SET} < Minimum fault current from CPP to Grid for fault on grid.

I_{SET} > Maximum load current considering power flow in *both* directions under normal loading conditions.

5.0 Tariff metering under bi-directional power flow

The AC machines operate in different quadrants as listed below (Refer Fig 1):

(i) Q^1: Both P & Q imported: Induction motor, Synchronous motor (under excited), Nil / insufficient reactive compensation.

(ii) Q^2: P - imported & Q – exported: Induction motor, Synchronous motor (over excited), Adequate / excess reactive compensation.

(iii) Q^3: Both P & Q exported: Induction generator, Synchronous generator (over excited), Adequate / excess reactive compensation.

(iv) Q^4: P - exported & Q – imported: Induction generator, Synchronous generator(under excited), Insufficient reactive compensation

5.1 Case 1: No local generation at CPP

In this case real power flows from grid to CPP; however reactive power flow can be in either direction depending on local load and quantum of reactive compensation. The operation can be in quadrants Q^1 or Q^2 (refer Fig.1). The units of tariff meter shall perform the following:

KWH Unit: Counter updated without constraint < Quadrants - Q^1 and Q^2 >

KVARH Unit: Counter updated only when reactive power is imported < Q^1 >

KVAH_A Unit: Counter updated without constraint $\{KVA = \sqrt{(KW^2 + KVAR^2)}\}$ < Q^1 and Q^2 >

Used for only for KVA demand (15 or 30 minutes) calculation.

Shall NOT be used for power factor calculation.

	KWH	KVARH	KVAH
Start Reading	P_B	Q_B	S_B
End Reading	P_E	Q_E	S_E

$$Power\ Factor \neq \frac{(P_E - P_B)}{(S_E - S_B)}$$

$$Power\ Factor = \cos\left(\tan^{-1}\left\{\frac{(Q_E - Q_B)}{(P_E - P_B)}\right\}\right)$$

Optional Unit

KVAH_B Unit: Counter updated with,

When reactive power is imported, $KVA = \sqrt{(KW^2 + KVAR^2)}$ < Q^1 >

When reactive power is exported, set KVA = KW < Q^2 >

Shall NOT be used for demand calculation

Used for only for power factor calculation.

$$Power\ Factor = \frac{(P_E - P_B)}{(S_E - S_B)}$$

5.2 Case 2: Local generation at CPP

In this case both real power and reactive power can flow *independently* in either direction. The meter shall record import and export quantities separately. This will enable proper accounting for banking and even if energy charges for import and export are different. The operation can be in all four quadrants from Q^1 to Q^4. Refer Fig. 3.The units of tariff meter shall perform the following:

I_KWH Unit: Counter updated only when real power is imported < Q^1 and Q^2 >

E_KWH Unit: Counter updated only when real power is exported < Q^3 and Q^4 >

I_KVARH Unit: Counter updated only when reactive power is imported < Q^1 and Q^4 >

KVAH Unit: Only when real power is imported, < Q^1 and Q^2 >

Counter updated with $KVA = \sqrt{(KW^2 + KVAR^2)}$

Used for only for KVA demand calculation.

	I_KWH	E_KWH	I_KVARH	KVAH
Start Reading	P_B^{IMP}	P_B^{EXP}	Q_B^{IMP}	S_B
End Reading	P_E^{IMP}	P_E^{EXP}	Q_E^{IMP}	S_E

$$Imported\ units,\ P^I = (P_E^{IMP} - P_B^{IMP})$$

$$Exported\ units,\ P^E = (P_E^{EXP} - P_B^{EXP})$$

$$Units\ banked = P^E - P^I$$

$$Imported\ VARs,\ Q^I = (Q_E^{IMP} - Q_B^{IMP})$$

$$Power\ Factor \neq \frac{P^I}{(S_E - S_B)}$$

$$Power\ Factor = \cos\left[\tan^{-1}\left(\frac{Q^I}{P^I}\right)\right]$$

Optional Unit:

E_KVARH Unit: Counter updated only when reactive power is exported < Q^2 and Q^3 >

Exported VARs, $Q^E = (Q_E^{EXP} - Q_B^{EXP})$

VARs banked = $Q^E - Q^I$

In future, if reactive power is also priced like real power, the above can be used for tariff calculations.

In passing it may be remarked that in USA, the maximum demand is based on KW and *not* on KVA. KVA is significantly related to current and hence the associated heating; but the thermal time constants are in hours. KW is directly related to system frequency. In India, with pronounced frequency problems during peak load period, it makes more sense to calculate maximum demand based on KW and not on KVA. After all, any large draw of KVAR is discouraged by the penalty imposed for operating at poor power factor. Hence all utilities in India can standardize on 30 minute KW maximum demand.

6.0 Conclusions

Directional over current relay is one of the useful tools used on the tie lines to grid to isolate the in-plant units from grid in case of grid faults. By following the steps given in this article, the commissioning engineer can ensure that the directional relay really looks at the intended direction and performs correctly, both under normal load conditions and under fault conditions. Some finer details on tariff metering under two and four quadrant operations are clarified.

Comments from Scrutineers' and Author's Replies

1.0 Scrutineers' Comment

Since the name of the article states directional over current relay operation, it is required to include more about the directional relay technology, for tariff metering.

Author's Reply

Regarding directional relay technology and techniques, exhaustive material is available in the following references:

(i) Protective Relays Application Guide, GEC Measurements, 1975

(ii) Protective Relaying Theory and Applications – edited by W A Elmore, A1994

However the main theme of the article is to show how bi-directional power flows influence directional over current relays used as part of islanding schemes under transient conditions and tariff metering under steady state conditions.

ieema journal

Sensitivity Comparison of Differential, REF and Over-Current Protections

Dr K Rajamani,

Power System Consultants, MUMBAI

(October 2002, IEEMA Journal, Page 28 to 33)

ieema journal

Sensitivity Comparison of Differential, REF and Over-Current Protections

Dr K Rajamani, Power System Consultants, Mumbai

1.0 Introduction

For transformers rated 5 MVA and above, in addition to phase and ground over current protections, differential protection and Restricted Earth Fault protection for star winding are also generally provided. The sensitivity of these protection schemes in detecting internal faults in delta – star transformer is examined. The analysis is done for resistance grounded and solidly grounded systems. The article concludes with critical remarks on effectiveness of differential scheme under certain conditions.

2.0 Resistance grounded system

Consider a delta-star transformer with neutral grounded through resistor R. Assume the source is present only on delta side (Fig 1).

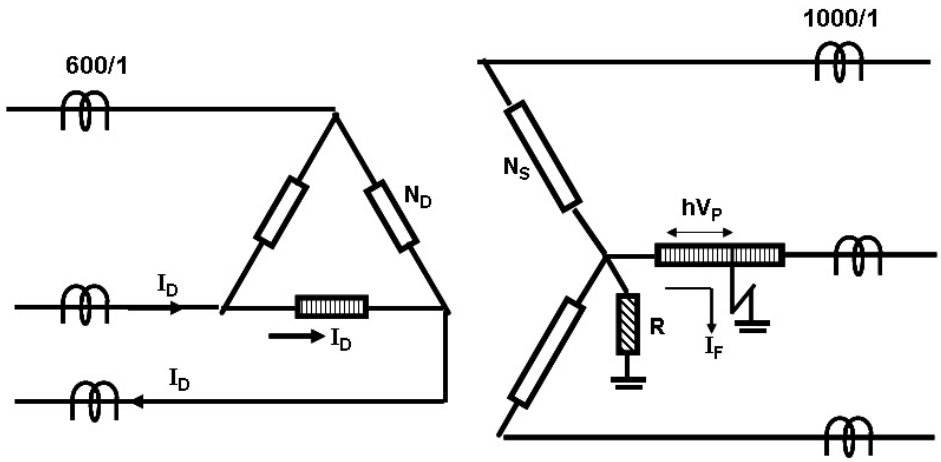

Fig 1

Number of turns on delta winding = N_D

Number of turns on star winding = N_S

$$Turns\ Ratio, T = \frac{N_s}{N_D}$$

$$\frac{I_{DELTA}^{PHASE}}{I_{STAR}^{PHASE}} = T = \frac{N_s}{N_D}$$

For an internal fault at fraction 'h' from neutral,

$$Fault\ Current, I_F = \frac{h\,x\,V_P}{R}$$

October 2002, IEEMA Journal, Page 28 to 33

Rated Phase voltage on star side = V_P

$$Effective\,Turns\,Ratio, T_E = \frac{h\,x\,N_s}{N_D}$$

$$= h\,x\,T$$

$$\frac{I_{DELTA}^{PHASE}}{I_{STAR}^{PHASE}} = T_E$$

$$= h\,x\,T$$

$$I_{DELTA}^{PHASE} = h\,x\,T\,x\,I_{STAR}^{PHASE}$$

$$I_{STAR}^{PHASE} = I_F = h\,x\frac{V_P}{R}$$

$$I_{DELTA}^{PHASE} = h^2\,x\,T\,x\frac{V_P}{R}$$

For terminal fault on star side (h = 1),

$$I_{STAR}^{MAX} = \frac{V_P}{R}$$

$$I_{DELTA}^{MAX} = T\,x\frac{V_P}{R}$$

Expressing the fault current in terms of maximum current,

$$I_{STAR}^{PHASE} = h\,x\,I_{STAR}^{MAX} \Rightarrow \propto h \qquad \text{.....(1)}$$

$$I_{DELTA}^{PHASE} = h^2\,x\,I_{DEL}^{MAX} \Rightarrow \propto h^2 \qquad \text{.....(2)}$$

The graphs of equations (1) and (2) are shown in Fig 2. It can be seen that for faults close to neutral (h < 0.3), current on delta side is too small.

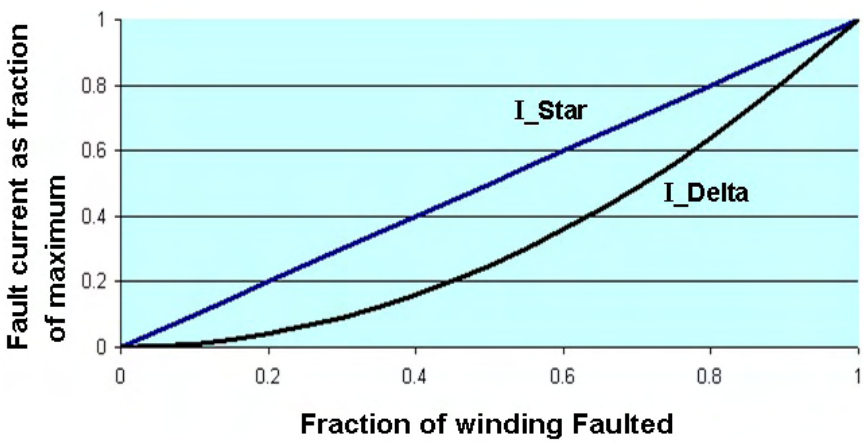

Fig 2

2.1 Example

Transformer rating: 10 MVA, 11 kV (Delta) / 6.6 kV (Star), NGR = 4.354 Ω

$$V_P = \frac{6600}{\sqrt{3}}$$
$$= 3810\,V$$

$$I_{STAR}^{RATED} = \frac{10000}{\left(\sqrt{3}x6.6\right)}$$
$$= 875\ A$$

$$I_{DELTA}^{RATED} = \frac{10000}{\left(\sqrt{3}x11\right)}$$
$$= 524\ A$$

$$Turns\ Ratio, T = \frac{3810}{11000}$$
$$= 0.3464$$

For terminal fault on star side (h = 1),

$$I_{STAR}^{MAX} = \frac{3810}{4.354}$$
$$= 875\ A$$

The ground fault current is limited to rated current.

$$I_{DELTA}^{MAX} = 0.3464\ x\ 875$$
$$= 303\ A$$

The current magnitudes on delta and star windings, as a function of fault location 'h', are given in Table I.

Table I				
h	**$I_F = \frac{h \times 3810}{4.354}$ A**	**I_F / I_F^{MAX}**	**$I_{DEL} = h \times T \times I_F$ A, T = 0.3464**	**I_{DEL} / I_{DEL}^{MAX}**
0.05	43.8	0.05	0.76	0.003
0.06	52.5*	0.06	1.09	0.004
0.10	87.5	0.10	3.03	0.010
0.12	105.0*	0.12	4.37	0.014
0.20	175.0	0.20	12.12	0.040
0.45	393.8	0.45	61.3*	0.203
0.50	437.5	0.50	75.78	0.250
0.63	551.3	0.63	120.3*	0.397
0.90	787.6	0.90	245.54	0.810
1.00	875.0	1.00	303.10	1.000

2.2 Sensitivity of differential protection (87)

A ground fault on star side gets reflected as line to line fault on delta side (Fig 1).

CT ratio on delta side = 600 / 1

CT ration on star side = 1000 / 1

If pick up is set at 10%,

Minimum Pick up current, $I_P = 600 \times 0.1$

$= 60$ *A.*

For faults up to 45% from neutral, current on delta side is less than 60 A. Thus only about 55% of winding is protected by differential.

If for any reason pick up is increased to 20%,

Minimum Pick up current, $I_P = 600 \times 0.2$

$= 120$ *A.*

For faults up to 63% from neutral, current on delta side is less than 120 A. Thus *only about 27% of winding is protected by differential*.

2.3 Sensitivity of REF protection (64)

The scheme is shown in Fig 3.

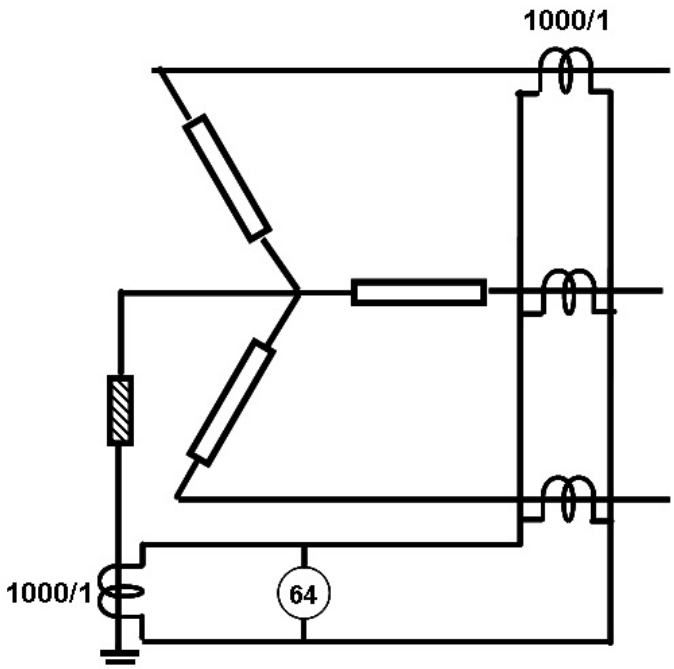

Fig 3

CT ratio on phase side = 1000 / 1

CT ration on neutral side = 1000 / 1

Any instantaneous relay (e.g. CAG 14) can be used in the high impedance scheme.

For minimum setting of 10%,

Minimum Pick up current = 1000 x 0.1

= 100 A

For faults up to 12% from neutral, current on *star* side is less than 100 A (Table I). Almost 88% of winding is protected (corresponding figure is 55% in case of differential).

The sensitivity of REF can be increased still further with neutral CT ratio of 500/1 instead of 1000/1 (Fig 4).

For minimum setting of 10%,

Minimum Pick up current = 500 x 0.1

= 50 A

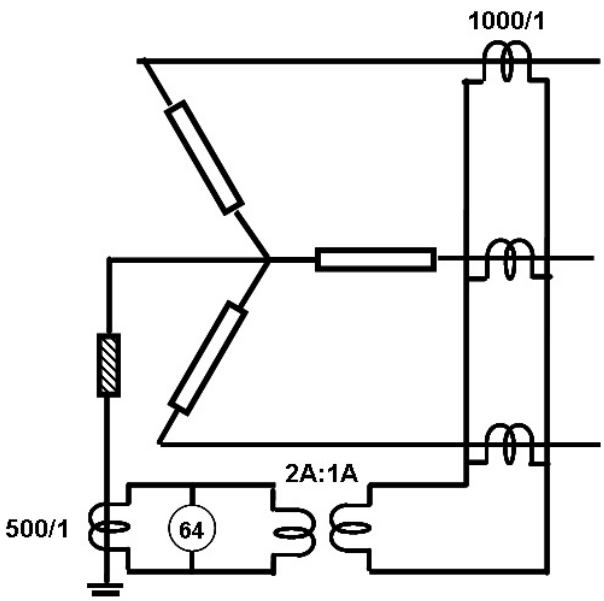

Fig 4

For faults up to 6% from neutral, current on star side is less than 50 A (Table I). Almost 94% of winding is protected and only about 6% of winding remains unprotected. For fault at 6% from neutral, current on delta side is too low (about 1 A) and differential will not definitely pick up.

Thus it is concluded that REF offers much more sensitive protection than differential for internal faults on star winding in case of resistance grounded system.

Only for faults very near to terminal, sensitivity of differential is comparable to REF.

3.0 Solidly grounded system

Consider the same transformer analyzed for resistance grounded system. In case of solidly grounded neutral, ground fault current magnitude will be very high (kA). For an internal fault at fraction 'h' from neutral, the fault current is a function of leakage reactance which itself is a complex function of 'h'. A detailed analysis leads to Fig 5, which shows the star and delta currents. As the fault point is shifted from terminal to neutral, the fault current on star side initially decreases but at about 35% from neutral the fault current starts rising before abruptly falling to zero near the neutral.

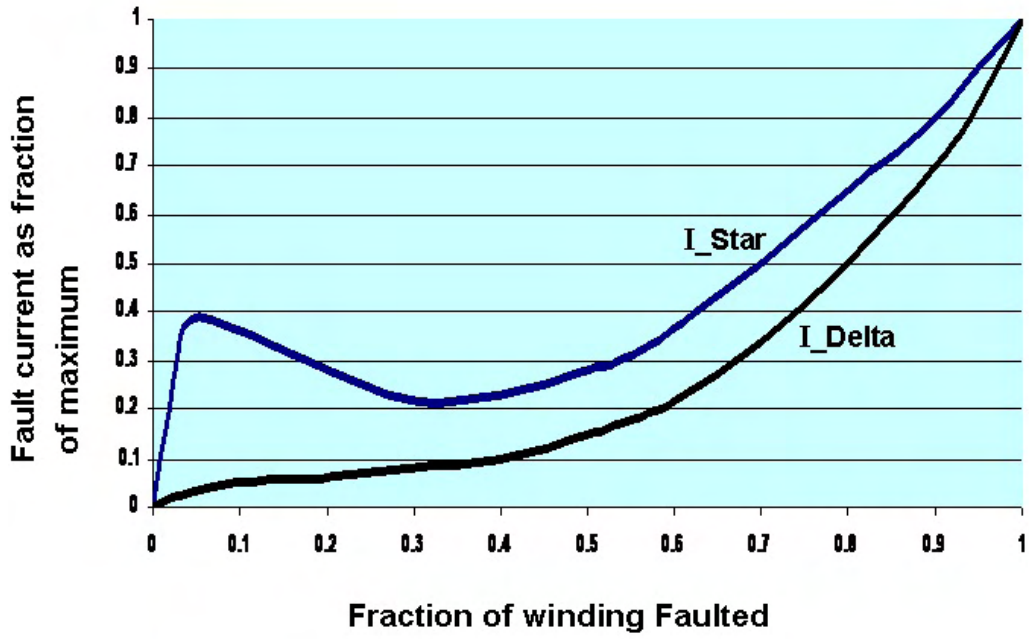

Fig 5

Assume for terminal fault on star winding, the ground fault current is limited to 10 x I^{RATED}.

$I_{STAR}^{MAX} = 10 \times 875\ A$

$= 8.75\ kA$

$I_{DELTA}^{MAX} = 8.75 \times 0.3464$

$= 3.03\ kA$

The current magnitudes on star and delta windings, as a function of fault location 'h', are given in Table II.

Table II				
h	**I_F - kA STAR**	**I_F / I_F MAX**	**I_{DEL} = h x T x I_F A**	**I_{DEL} / I_{DEL} MAX**
0.05	3.33	0.38	58*	0.019
0.1	3.15	0.36	109	0.036
0.2	2.54	0.29	176	0.058
0.3	1.93	0.22	200	0.066
0.35	1.93	0.22	233	0.076
0.4	2.01	0.23	279	0.092
0.8	5.95	0.68	1649	0.544
1.0	8.75	1.00	3031	1.000

3.1 Sensitivity of differential protection

If pick up is set at 10%,

Minimum Pick up current, $I_P = 600 \times 0.1$

$= 60$ *A.*

For faults up to 5% from neutral, current on delta side is less than 60 A (Table II). Thus about 95% of winding is protected by differential.

3.2 Sensitivity of REF protection

The scheme is similar to shown in Fig 3.

CT ratio on phase side = 1000 / 1

CT ration on neutral side = 1000 / 1

For minimum setting of 10%,

Minimum Pick up current $= 1000 \times 0.1$

$= 100$ *A*

Except for dead fault on neutral, current on *star* side is greater than 100 A. For example, even at 5% from neutral, fault current on star side is 3.33 kA. (Table II). Almost 100% of winding is protected (corresponding figure is 95% in case of differential).

4.0 Internal fault on delta winding

The phase voltages ($V_R = V_Y = V_B = 1.0$ pu) and line voltages ($V_{RY} = V_{YB} = V_{BR} = \sqrt{3}$ pu) are shown in Fig 6.

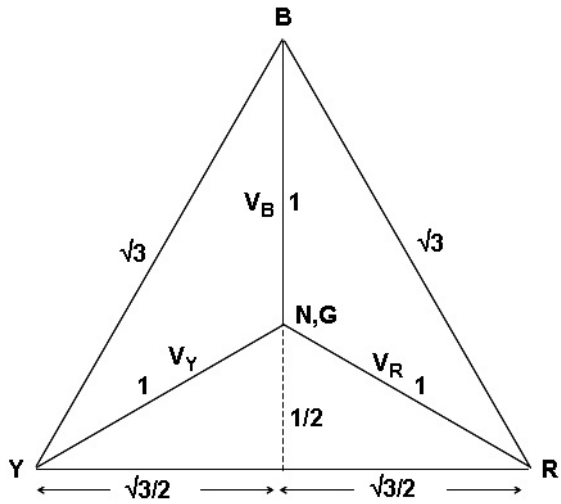

Fig 6

No part of delta winding has voltage to neutral / ground less than 0.5 pu. In star winding voltage varies from 1.0 pu at terminal to 0 at neutral. The corresponding figure for delta winding is 1.0 pu at terminal to 0.5 pu at midway of winding. Hence the range of variation of fault current magnitude is also less in delta compared to star. For a fault at middle of delta winding, voltage is 0.5 pu and the impedance is also 0.5 pu. For the transformer considered in previous examples,

$$Fault\ Current, I_F = \frac{0.5}{0.5}$$
$$= 1\ pu$$
$$= 524\ A$$

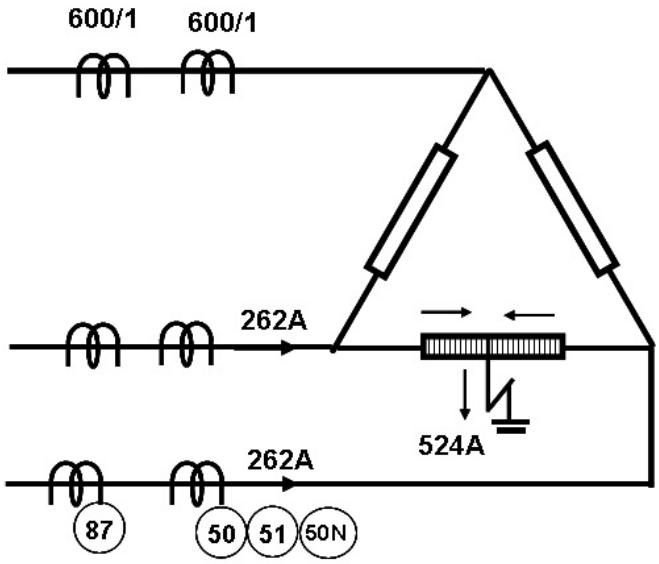

Fig 7

Current through each phase (Fig 7), I_F^P *= 262 A*

4.1 Differential protection

Even if pick up for differential protection is set at 40%, the differential will operate as the pick up current is 240 A (600/1 x 0.4) whilst the fault current through each phase I_F^P is 262 A. If the pick up for differential is set at 10%, it offers positive protection for faults on delta winding.

4.2 Over-current protection

Instantaneous phase & ground over-current (50,50N) and IDMT phase over-current (51) relays are provided on delta side of transformer (Fig 7). Typically 50 is set at 1000% and 51 is set at 150%.

Pick up for instantaneous element (50) = 600 x 10

= 6000 A

Pick up for IDMT element (51) = 600 x 1.5

= 900 A

For fault on delta winding, current through each phase I_F^P is only 262 A and the above two relays will not pick up.

Regarding 50N, the maximum setting possible is 44% (600 x 0.44 = 264 A). If the setting is kept low (say 10%), it may pick up during transformer charging.

The superiority of differential protection now becomes clear as it is the only sensitive protection to detect reliably faults on delta winding.

5.0 Conclusion

For faults on star winding in resistance grounded system, sensitivity of REF protection is far superior to that offered by differential protection.

For faults on star winding in solidly grounded system, sensitivity of REF protection is better than that offered by differential protection though the comparison is not as dramatic as in the case of resistance grounded system.

For faults on delta winding, differential offers the most reliable protection compared to over current protections.

6.0 References

[1] P M Anderson, Power System Protection, McGraw Hill, N.Y. 1999

Comments from Scrutineers' and Author's Replies

1.0 Scrutineers' Comment

Examples with voltage tap changer transformer can also be considered.

Author's Reply

Yes. The proper value of T in Tables I and II for different tap settings can be used. However this will not change the final conclusion regarding superiority of REF protection.

2.0 Scrutineers' Comment

The sensitivity is discussed on earth faults only. This should be mentioned.

Author's Reply

Yes. We are discussing only about earth faults.

3.0 Scrutineers' Comment

In Fig 5, the star side fault current increases as fraction of winding faulted decreases, it does not become zero.

Author's Reply

In case of solidly grounded system, leakage reactance is a complex function of fault location h and this leads to the peculiar curve shown in Fig 5. Extensive discussions on this subject are available on page 678 of reference given in the article.

4.0 Scrutineers' Comment

The over current protection acts as a back up to differential protection. The settings of O/C and E/F will be graded to the downstream relays.

Author's Reply

The over current protections on delta side will not reliably back up differential protection for faults on delta side. Of course, the phase over current relays on delta side will be graded with down stream phase over current relays on star side. However, since delta offers zero sequence isolation, coordination is not required between ground over current relays on delta side and star side.

ieema journal

Peculiarities of Delta Connection in Electrical Power Systems

Dr K Rajamani,

Power System Consultants, MUMBAI

(December 2003, IEEMA Journal, Page 38 to 42)

ieema journal

Peculiarities of Delta Connection in Electrical Power Systems

Dr K Rajamani, Power System Consultants, Mumbai

1.0 Introduction

In the first course in Electrical Engineering, one is taught about the equivalence between star and delta winding and the formula for conversion from star impedance to delta impedance and vice versa. An impression is created that, looking from terminals, performances of star and delta windings are identical. Though this is true for positive (and negative) sequence quantities, the performances of star and delta windings are dramatically different for zero sequence quantities. In this article, we will illustrate a few examples in which presence of delta winding leads to peculiar phenomena in power systems.

2.0 Third harmonic, Zero sequence and Delta

The theory of symmetrical components enables one to evaluate fault current distribution for unbalanced faults like line-to-ground fault in power system. The zero sequence currents (I_0) which are equal in magnitude but with no phase angle difference among them flow in the three phases at any point in the network. The ground relay (51N) in fact measures the $3I_0$ flowing at the relay location (Fig 1). The point to be noted is that this zero sequence current is at 50 Hz.

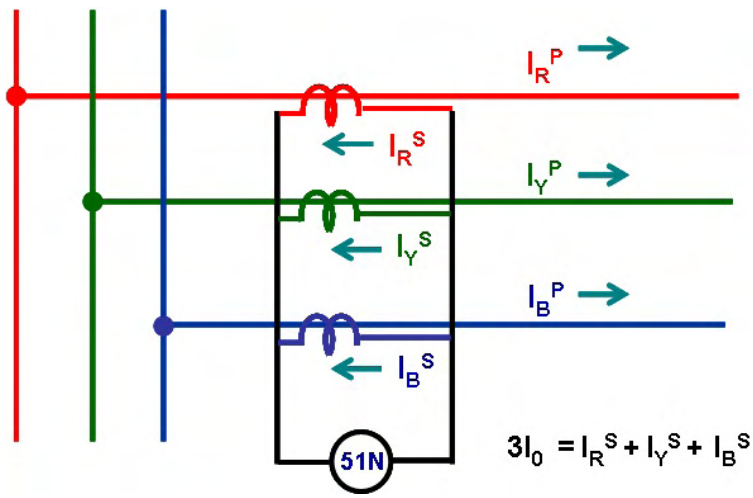

Fig 1 Ground Relay Connection

In Table 1, phase angle relationship for (odd) harmonics is shown. From this table it can be seen that multiples of 3rd harmonic (3, 9, 15,..) are essentially zero sequence components. 3rd harmonic is a zero sequence quantity at 150 Hz, 9th harmonic is a zero sequence quantity at 450 Hz, and so on. In case of positive (or negative) sequence

December 2003, IEEMA Journal, Page 38 to 42

quantities, neutral grounding is immaterial as neutral current is zero. This is precisely the reason why the classical conversions of star to delta and delta to star are possible for positive (or negative) sequence quantities.

Table 1				
Phase angle of harmonic components				
Harmonics Number	**Phase R**	**Phase Y**	**Phase B**	**Phase Rotation**
Fundamental	0	120	240	(+ve)
Third	0	3 x 120(=0)	3x240(=0)	Zero
Fifth	0	5 x 120(=240)	5x240(=120)	(-ve)
Seventh	0	7 x 120(=120)	7x240(=240)	(+ve)
Ninth	0	9 x 120(=0)	9x240(=0)	Zero
Eleventh	0	11 x 120(=240)	11x240(=120)	(-ve)
Thirteenth	0	13 x 120(=120)	13x240(=240)	(+ve)
Fifteenth	0	15 x 120(=0)	15x240(=0)	Zero

But for the flow of zero sequence current, neutral connection to 'ground' *must* exist (Fig 2). Hence, power engineers use the terms 'zero sequence current' and 'ground fault current' interchangeably. If neutral connection does not exist, as in ungrounded system, suppression of zero sequence current appears as zero sequence voltage. Open delta PT employed in ungrounded system measures this voltage ($3V_0$).

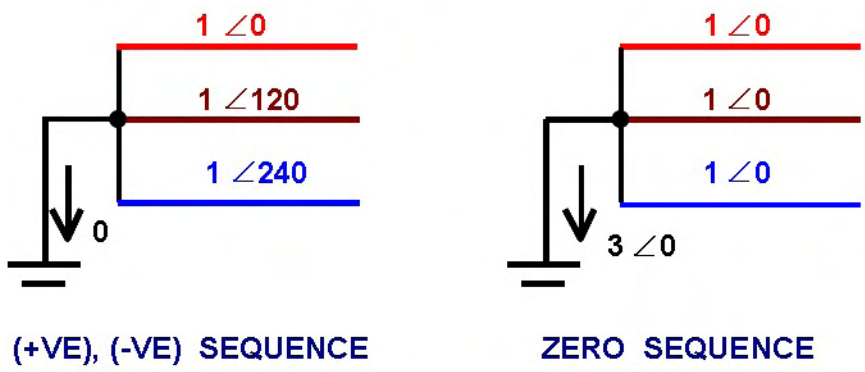

Fig 2 Neutral Current

The peculiarity of delta connection is that zero sequence current can flow within delta but with no current output from terminal. Measurements made on terminal can indicate no current while a large (zero sequence) current is circulating within delta (Fig 3).

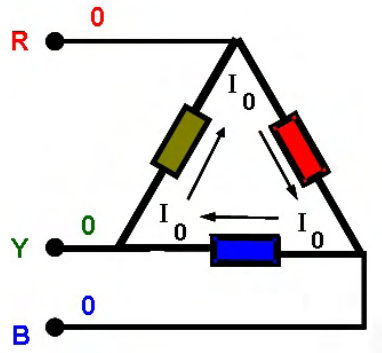

Fig 3 Zero Sequence Current in Delta

If positive (or negative) sequence currents are flowing with in delta, terminal currents must exist, like normal load currents. In Fig 4, vectorial sum of I_{BR} and I_{BY} is not zero but √3 x (Phase current), a well-known relationship.

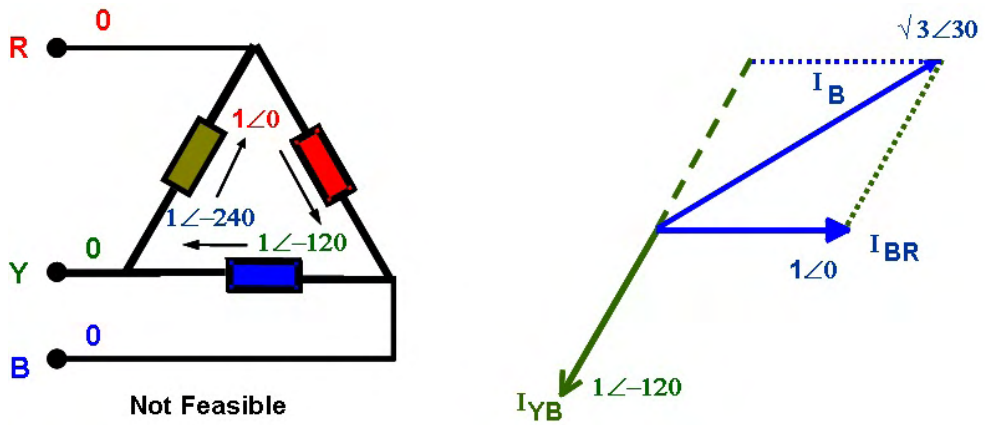

Fig 4 (+ve) Sequence Current in Delta

Transformer theory demands that to induce sinusoidal voltage, the exciting current must have fundamental *and* third harmonic. This is due to non-linearity of magnetic circuit above the knee of (B - H curve). In the case of star-star transformer, the 3rd harmonic component of exciting current flows from the source and returns back to the source via the grounded neutral of transformer. This flow of 3rd harmonic current on incoming line results in increased neutral current flow, problem of resonance with system capacitance and distortion in energy meter readings. In case the transformer has delta winding, 3rd harmonic component of exciting current can circulate within delta and not flow on the line. This is one of the reasons for providing a delta winding (called tertiary) in star-star transformers.

3.0 Inadvertent grounding

The neutrals of generators and star winding of transformers are grounded to establish well-defined return path for earth fault currents. This facilitates selective and speedy isolation of faults by ground fault relays. Sometimes the presence of delta winding in a transformer creates inadvertent ground paths not anticipated during design stage. The situation is illustrated with a following example.

Consider the system shown in Fig 5A. The sub-station SS#1 is fed by 66 kV system through transformer TR#1. There is a tie feeder to sub-station SS#2. For the present, ignore the presence of transformer TR#2.

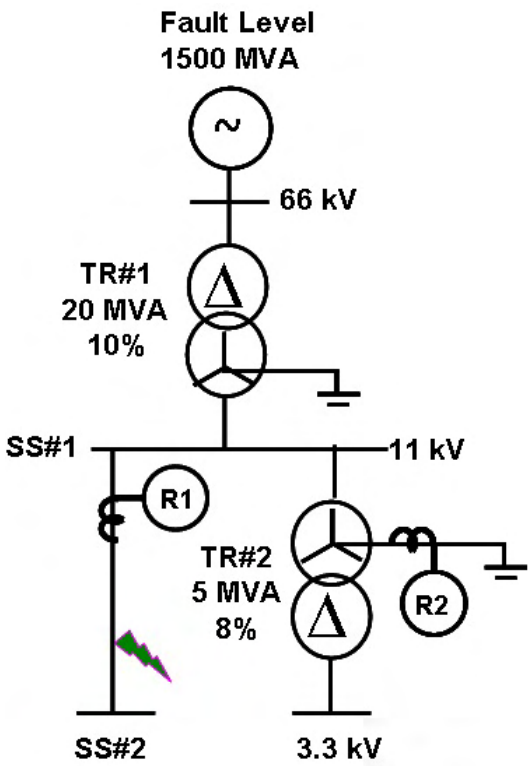

Fig 5A

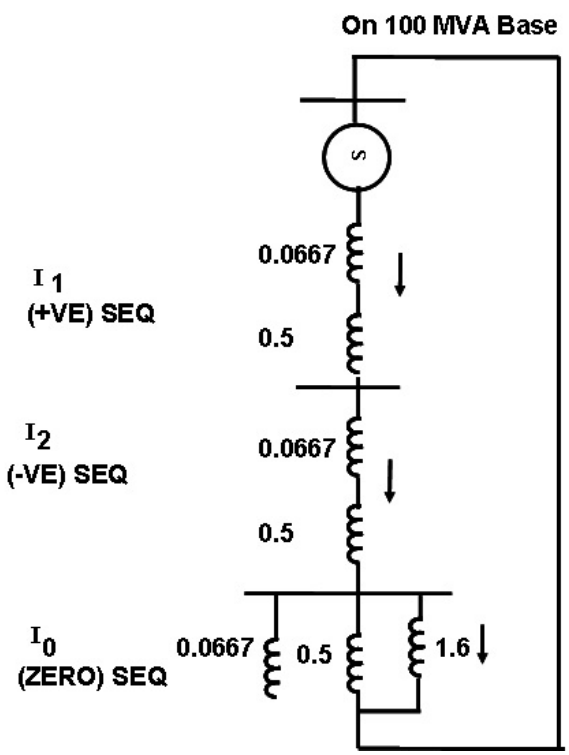

Fig 5B

Inadvertent Grounding

For a line to ground fault on tie feeder, the sequence network interconnection is shown in Fig 5B. Ignore impedance 1.6 shown for TR#2.

Base current at 11 kV,

$$I_B = \frac{100}{\left(\sqrt{3} x 11\right)}$$

$$= 5.2486 \ kA$$

$Z_1 = Z_2 = 0.5667$ p.u.;

$Z_0 = 0.5$ p.u.

$$I_0 = I_1 = I_2 = \frac{1.0}{(Z_1 + Z_2 + Z_0)}$$

$$= \frac{1}{1.6334}$$

$= 0.6122$ p.u.

Fault current $I_F = 3I_0$

$= 1.8366$ p.u.

I_0 in A $= I_0$ in pu x I_{base}

$= 1.8366 \times 5.2486$

$= 9.6401$ kA

The ground relay R1 on tie feeder will sense this fault current and trip the feeder in the desired time as required for proper co-ordination with down stream relays.

Assume that an additional transformer TR#2 is added at sub-station SS#1. Let the vector group of TR#2 be star – delta. For a line to ground fault on the tie feeder, from Fig 5B,

$Z_1 = Z_2 = 0.5667$ p.u.;

$Z_0 = 0.5 \,//\, 1.6$

$= 0.381$ p.u.

$$I_0 = I_1 = I_2 = \frac{1.0}{(Z_1 + Z_2 + Z_0)}$$

$$= \frac{1}{1.5144}$$

$= 0.6603$ p.u.

Total Fault current $I_F = 3I_0$

$= 1.9809$ p.u.

I_0 in A $= I_0$ in pu x I_{base}

$= 1.9809 \times 5.2486$

$= 10.397$ kA

The ground fault current returning through TR#2 = $10.397 \times \left(\frac{0.5}{2.1}\right)$

$= 2.48$ kA

The ground relay R2 on TR#2: 11 kV side will respond to fault on a tie feeder and will trip TR#2 while there is no fault on TR#2 feeder itself! This is due to the fact that zero sequence currents can flow on star side of TR#2 as equivalent zero sequence currents can flow on delta side (Fig 5C). Thus TR#2 intended purely as a distribution transformer offers inadvertent grounding due to selected vector group.

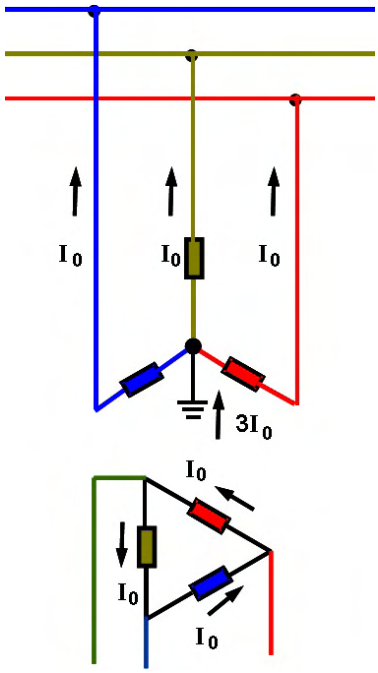

Fig 5C Zero Sequence Current Flow

4.0 Mal-operation of ground relays for external faults

A typical plant distribution is shown in Fig 6A. The vector group of Station Transformer (ST) is star – star – Δtertiary. The tertiary winding enables third harmonic component of exciting current to circulate within delta. But the presence of delta tertiary leads to mal-operation of ground relay on HV side of transformer as explained below.

The ground relay R1 is intended to look for faults within the transformer and the 6.6 kV bus. The setting of relay R1 is done such that it co-ordinates correctly with 6.6 kV downstream relays. But this relay R1 will also sense for ground faults in external grid and trip the transformer even though there is no source on 6.6 kV side of ST. At first it appears impossible that relay R1 will pick up for faults in grid without any source on 6.6 kV side, but the presence of delta tertiary radically alters the situation.

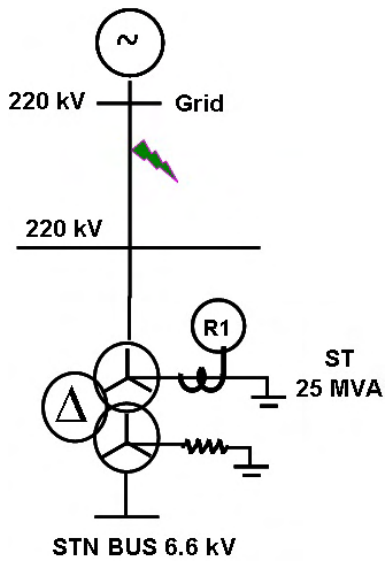

Fig 6A Typical Distribution Scheme

A typical current distribution (in pu on 10 MVA Base) for fault on incoming grid line is shown in Fig 6B. Part of ground fault current returns to grid neutral. But the other part returns through neutral of ST (HV side). The balancing zero sequence currents flow within delta tertiary.

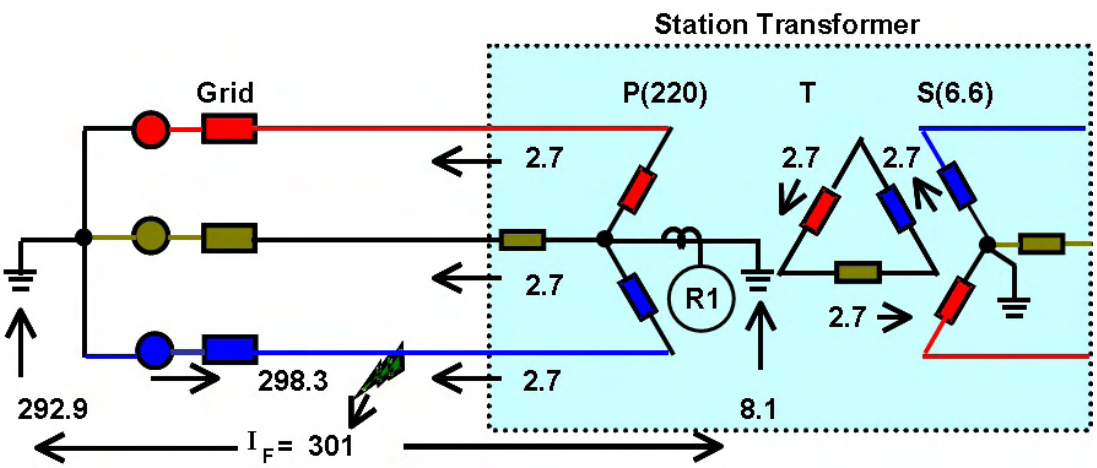

Fig 6B Fault Current Distribution

$$I_{BASE} \text{ @ } 220\ kV = \frac{10}{\left(\sqrt{3}x220\right)}$$

$$= 0.0262\ kA.$$

Current through Relay R1 = 8.1 x 26.2

= 212 A.

If the setting of R1 is lower than the above value, this relay will pick up and trip the transformer.

To overcome the above, it is a normal practice to directionalise the ground relay R1 so that it looks only for faults with in the transformer and 6.6 kV bus. Needless to add that this will require voltage polarization signal from open delta PT output.

5.0 IPCT (Interposing CT) for differential protection of star –star transformer

It is well known that for differential protection of star – delta transformer, the main CTs are connected in star along with star – delta IPCTs to account for phase shift in main power transformer. Hence, it appears logical that for star – star transformer, where there is no phase shift, IPCT for phase matching is not required. However, a majority of standard schemes introduce star – delta IPCTs. The IPCT plays a pivotal role in ensuring stability of differential scheme for external faults, in case the star – star transformer is provided with delta tertiary. The typical current distribution in pu for external fault is shown in Fig 7A.

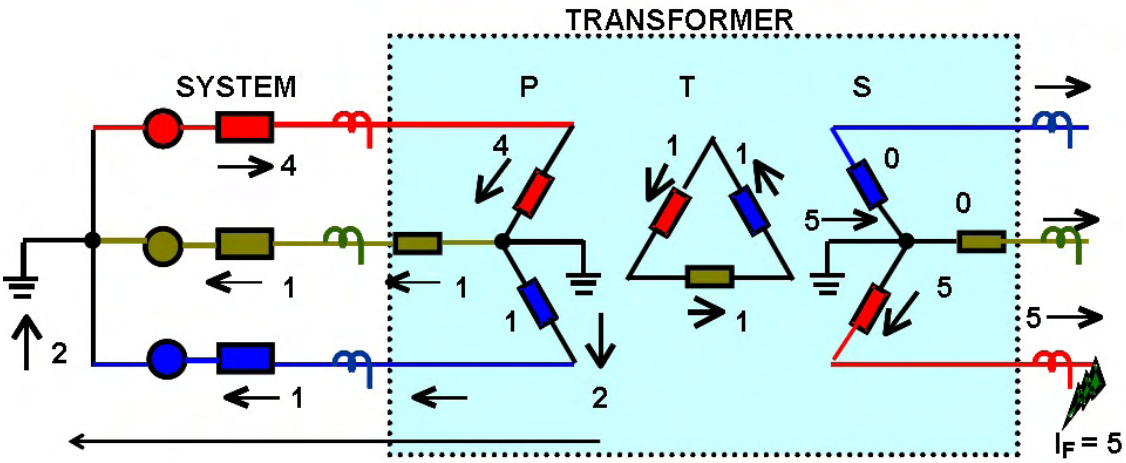

Fig 7A Fault Current Distribution for Through Fault

Because of delta tertiary, per unit ground fault currents flowing on secondary and primary sides are not equal. (in fact the difference is contributed by tertiary). Hence, the currents measured by line CTs on secondary and primary sides (accounting for turns ratio) are not equal; spill current flows in operating coil of relay making the differential scheme to pick up for external faults. By providing a star - delta IPCT (Fig 7B), through circuit zero sequence unbalance is prevented from entering the operating coil of relay, ensuring stability for external faults. Thus the presence or absence of tertiary winding has significant impact on protection schemes.

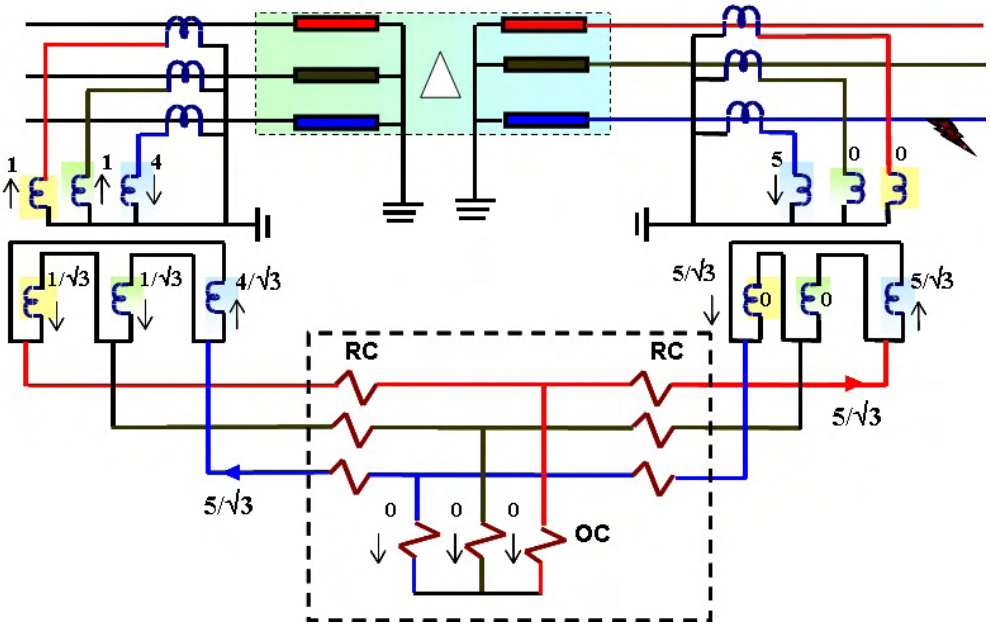

Fig 7B Star – Delta IPCT for Differential Protection

6.0 Single Phasing in star and delta connected motors

One of the most frequently encountered problems in Low Tension motors is 'Single Phasing'. In the case of single phasing, the line currents increase to √3 times the normal value. The protective device (usually thermal overload relay like bimetal) senses the line current and operates as per its time – current characteristics.

The scenario for star connected motor is shown in Fig 8A. Under single phasing condition, one winding does not carry any current and the other two windings carry equal current.

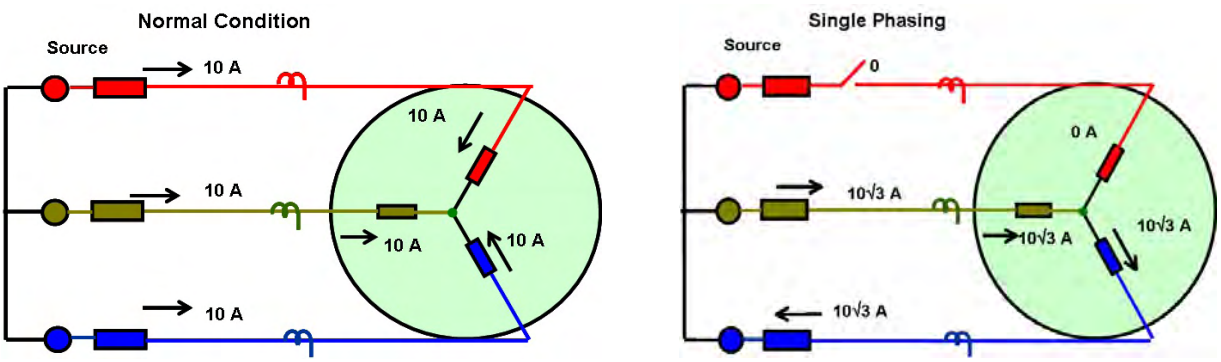

Fig 8A Star Connected Motor

I_L_S_N: Line current in Star winding under Normal condition

I_P_S_N: Phase current in Star winding under Normal condition

I_L_S_1: Line current in Star winding under single phasing condition

I_P_S_1: Phase current in Star winding under single phasing condition

$$\frac{I\_L\_S\_1}{I\_L\_S\_N} = \frac{I\_P\_S\_1}{I\_P\_S\_N} = \sqrt{3}$$

The scenario for delta connected motor is shown in Fig 8B. Under single phasing condition, all the three windings carry current.

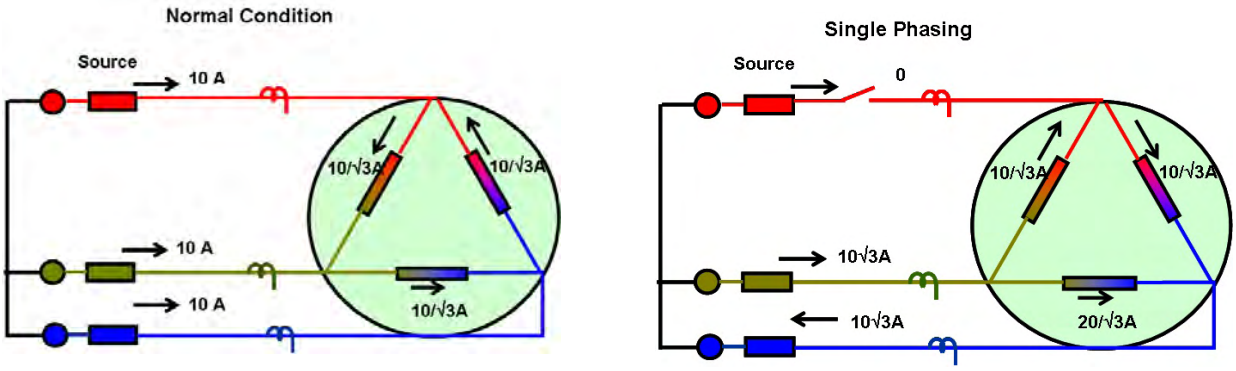

Fig 8B Delta Connected Motor

I_L_D_N: Line current in Delta winding under Normal condition

I_P_D_N: Phase current in Delta winding under Normal condition

I_L_D_1: Line current in Delta winding under single phasing condition

I_P_D_1: Phase current (Max) in Delta winding under single phasing condition

$$\frac{I\_L\_D\_1}{I\_L\_D\_N} = \sqrt{3} \quad ; \quad \frac{I\_P\_D\_1}{I\_P\_D\_N} = 2$$

Measurements made on line side truly reflect the overload on phase winding in case of star winding. But in case of delta winding, the overload on line side is only √3 times while the overload on phase winding is twice. Thus, overload devices connected to CTs on line side *under-protect* the motor.

7.0 Reciprocity in star – delta transformer for ground faults

A line-to-ground fault on star side of delta-star transformer gets reflected as line-to-line fault on delta side of transformer (Fig 9A).

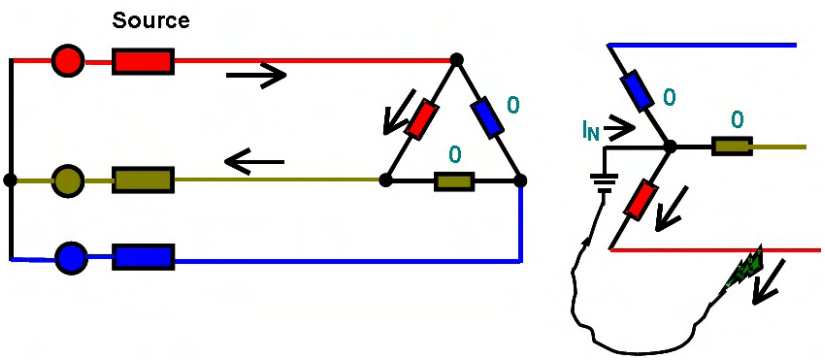

Fig 9A L-G Fault on Delta – Star Transformer

A line-to-ground fault on delta side of star-delta transformer, in presence of grounding (zig-zag) transformer, gets reflected as line-to-line fault on star side of transformer (Fig 9B).

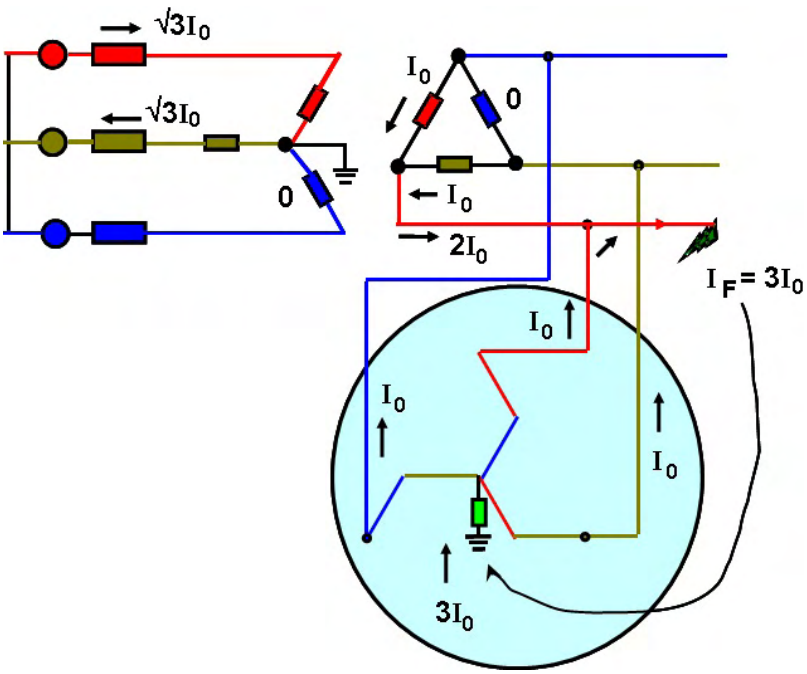

Fig 9B L-G Fault on Star - Delta Transformer

8.0 Neutral shift in presence of delta winding

8.1 Case 1

The 11 kV system shown in Fig 10A is ungrounded. Phase and line voltages are shown for a line to ground fault on R phase on 11 kV side. The line voltages V_{RY}, V_{YB} and V_{BR} are unaffected (equilateral triangle) and remain at 11 kV. (It may be mentioned in passing that line voltage triangle is almost equilateral even for high and low resistance grounded system). The R phase voltage V_{RG} goes to zero but Y and B phase voltages

(V_{YG} and V_{BG}) rise to 11 kV. The neutral shift V_{NG} at any point in network is equal to V_0. If an open delta PT is connected, it will measure

$$3V_0 = V_{RG} + V_{YG} + V_{BG}$$
$$= \sqrt{3} \times 11 \text{ kV.}$$

In this case, thus

(i) No change in line voltage

(ii) Large open delta voltage

(iii) Change in phase voltage

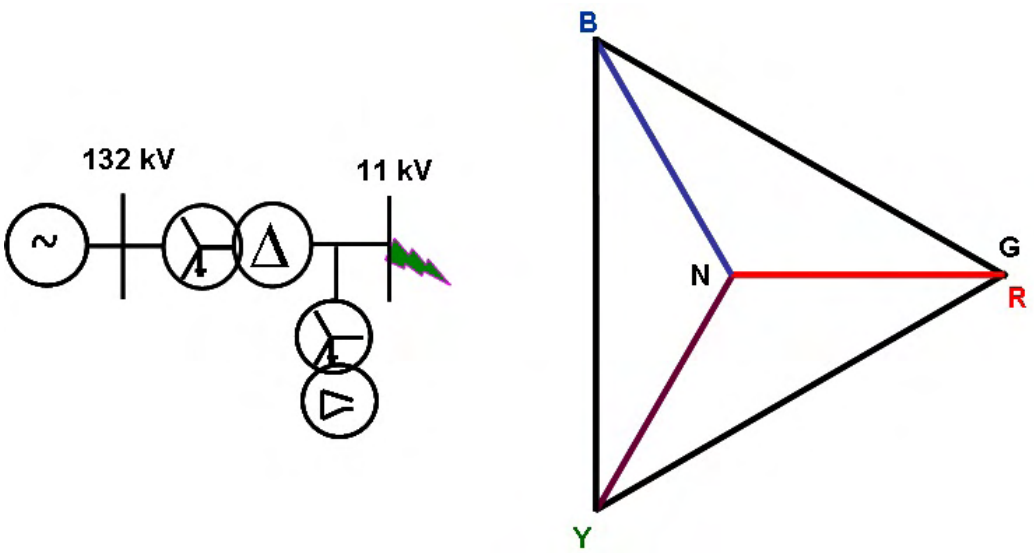

Fig 10A L-G Fault in Ungrounded system

8.2 Case 2

Consider the system shown in Fig 10B. The voltage vectors on star and delta sides are shown for ground fault on star side. On delta side, the line voltage triangle is almost isosceles. One phase voltage V_{RG} is near normal but other two phase voltages (V_{YG} & V_{BG}) are almost half of normal value. But open delta voltage ($V_{RG}+V_{YG}+V_{BG} = 3V_0$) is zero! In this case, on delta side, thus

(i) Change in line voltage

(ii) Open delta voltage is Zero

(iii) Change in phase voltage

From the above it is evident that neither the line voltage nor open delta voltage is a foolproof indicator of voltage balance. In Case 1, the line voltages appear balanced and in Case 2 open delta voltage is zero. Hence the true quantity which characterizes correctly the voltage unbalance under all operating conditions is the phase voltage. It is for this reason that metering and protection (e.g. under voltage relays) equipment shall preferably be connected to phase voltages and not line voltages.

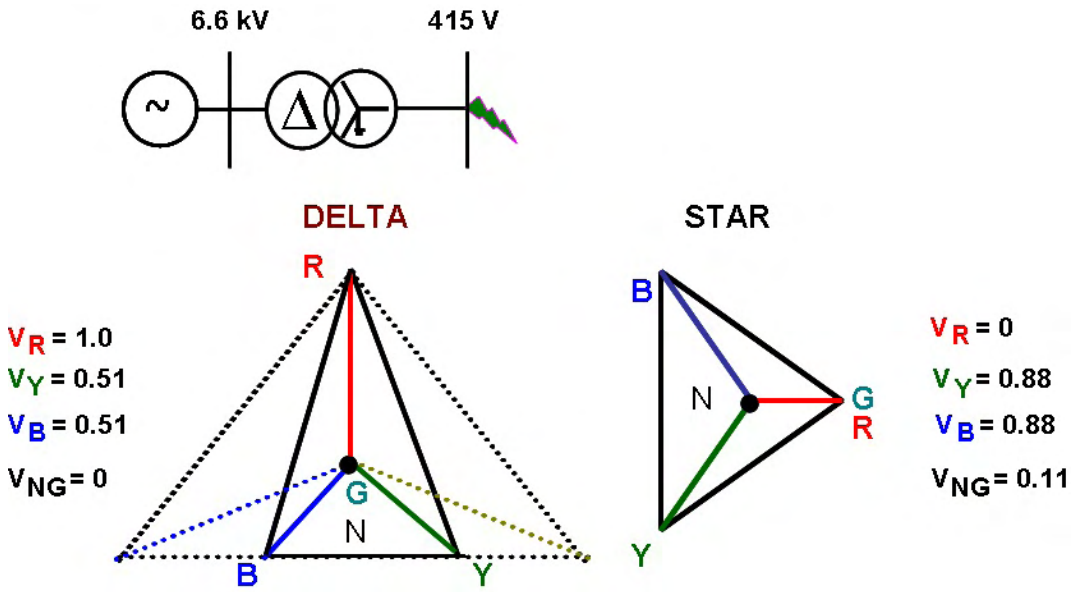

Fig 10B Voltage shift across Transformer

9.0 Conclusion

The delta connection in power systems presents peculiar problems. This article gives insight into some of the problems. The practicing engineers are encouraged to critically look at delta connections they come across. This is not only intellectually stimulating but may reveal a lot of surprises.

ieema journal

Overload Protection of Electrical Equipment

Dr K Rajamani,

Reliance Infrastructure Ltd., MUMBAI

(June 2004, IEEMA Journal, Page 30 to 34)

ieema journal

Overload Protection of Electrical Equipment

Dr K Rajamani, Reliance Infrastructure Ltd., Mumbai

1.0 Introduction

Among the practicing engineers, widespread confusion to distinguish between over load and over current protection exists. This article clarifies the basic issues involved. The salient features of over load protection of motor, transformer and generator are listed. The need for accurate data in the over load region for thermal withstand curve of motor is brought out. The pivotal role of temperature sensors in over load protection of equipment is emphasized. The effect of temperature on insulation life of electrical equipment is discussed that will be useful to assess residual life of insulation.

2.0 Case Studies

As a first step towards understanding underlying concepts, the setting of over current relay on incomer to MCC will be discussed. Refer Fig 1.

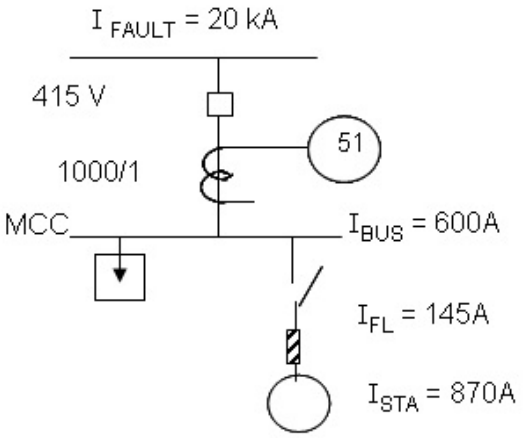

Fig 1 Relay Setting

The data considered are:

Maximum running load current of bus: I_{BUS} = 600A

Full load current of biggest motor: I_{FL} = 145A

Starting current of biggest motor: I_{STA}= 870A

Starting time of motor: 3.5 sec.

Fault level at MCC: I_{FLT} = 20kA

CT ratio: 1000/1

June 2004, IEEMA Journal, Page 30 to 34

2.1 Case 1

Set the plug based on maximum running load current of bus or say with 20% margin.

$$PS = \frac{(600 x 1.2)}{1000}$$

$$= 0.72$$

Set PS = 0.75.

The corresponding Primary Operating Current (POC)

$$POC = 0.75 \times 1000$$

$$= 750 \text{ A}$$

Plug Setting Multiplier (PSM)

$$PSM = \frac{\text{Fault Current}}{POC}$$

$$= \frac{20{,}000}{750}$$

$$= 26.7$$

For IDMT relays, the characteristic flattens out for PSM greater than 20. (Refer Fig 2).

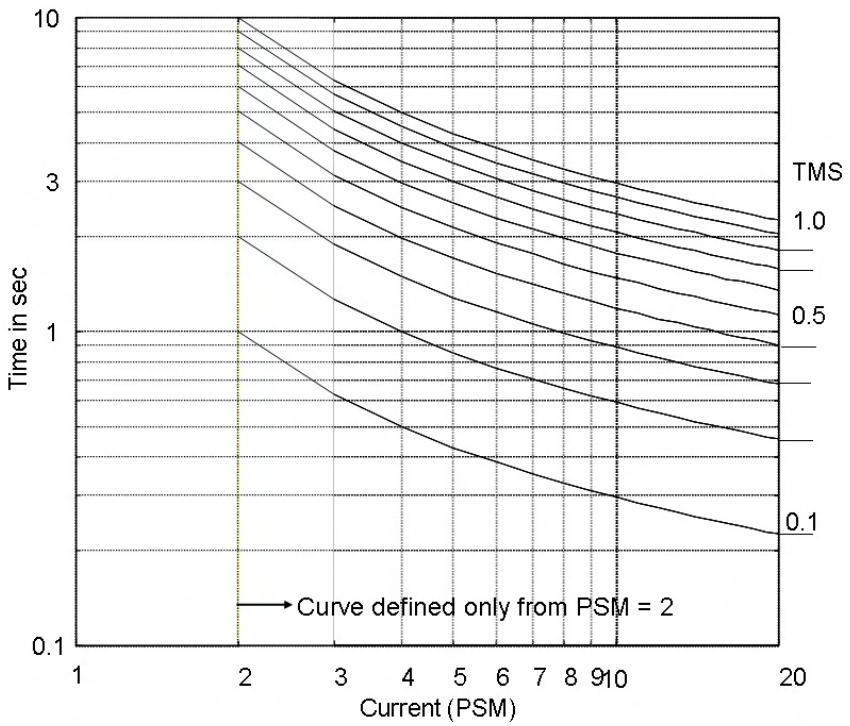

Fig 2 IDMT characteristics

For fault on outgoing motor feeder, the fuse will operate in, say, 0.01 sec. Considering coordination margin of 0.15 sec between fuse and relay, the Desired Operating Time (DOT) of relay is 0.16 sec.

For NI characteristics, Operating Time (OT) at any Time Multiplier Setting (TMS) is given by:

$$OT = \frac{(TMS x 0.14)}{(PSM^{0.02} - 1)}$$

Set TMS = 0.07. With PSM = 20, OT = 0.16 sec

The curve for Case 1 is shown in Fig 3. On Fig 3, the starting characteristic of motor is also plotted. This intersects with relay characteristic at t = 0.9 sec. Since the starting time of motor is 3.5 sec, the relay will pick up during starting of the biggest motor and incomer to MCC will trip. This is not correct.

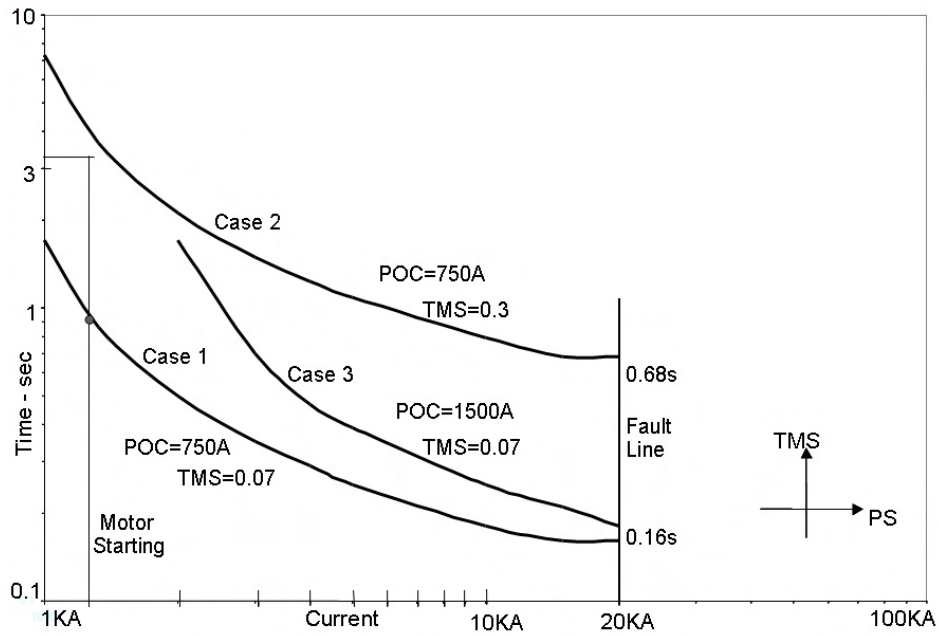

Fig 3 Case studies

2.2 Case 2

PS is retained as in Case 1. TMS is increased from 0.07 to 0.3 so that the relay does not pick up during motor starting. The relay characteristic for this case is shown in Fig 3. (Note that increase of TMS shifts the curve vertically upwards). The motor starting characteristic does not intersect with relay characteristic and the relay will not pick up during starting of biggest motor on the bus. However, the operating time for fault current (20 kA) increases from 0.16 to 0.68 sec. Since

operating time of MCC incomer has increased, the operating time of upstream relays will also correspondingly increase to obtain co-ordination. This is not desirable, as electrical faults shall be cleared within the shortest possible time.

2.3 Case 3

The plug setting is increased to ride over starting transients.

$$Set\ PS \geq \frac{(I_{BUS} - I_{FL} + I_{STA})}{CT\ Ratio}$$

$$\geq \frac{(600 - 145 + 870)}{1000}$$

$$\geq 1.325$$

$$Set\ PS = 1.5$$

$$POC = 1000 \times 1.5$$

$$= 1500\ A$$

$$PSM = \frac{20{,}000}{1500}$$

$$= 13.3$$

Set TMS as 0.07 as in case 1.

The relay characteristic for this case is shown in Fig 3. (Note that increase of PS shifts the curve horizontally to the right). The motor starting characteristic does not intersect with relay characteristic and the relay will not pick up during starting of biggest motor on the bus. The operating time for fault current also remains low at 0.18 sec as in Case 1. The operating times of upstream relays also will not increase beyond acceptable limits.

The above case study illustrates the fallacy in choosing PS based on running load current and may be with margin to account for over loads. Set the PS *liberally* to overcome any transients. Since POC is very much lower than fault current, secure operation during faults is not sacrificed. But any increase of TMS shall be done with at most caution, as relay operating time for fault current proportionately increases.

3.0 Over load and over current

The practicing engineer feels uneasy with case 3 as the PS is set corresponding to POC of 1500A while running load current is far below at 600A and the relay does not cover the over load region. But let us pause for a moment and understand distinct regions for over load and over current. The over load region

is typically between 110% to say 140% and the over current region is above 200%. For example, the characteristic of an over current relay is shown in Fig 2 and it can be seen that the curve is defined only from 200%. Below 200% the relay manufacturer is not expecting the over current relay to offer sensible protection to the protected object. Even IEEE Std 37.12 defines over current withstand capability of transformer from 200% onwards.

The over load withstand time of equipment is of the order of minutes. The generator can withstand 130% load for one minute and transformer can withstand 130% load for two hours!

The over current is short circuit current and the short circuit has to be cleared within one second. Critical Clearing Time (CCT) for generating units is typically with in one second. If the fault clearance time is higher than CCT, unit looses synchronism with the rest of the system and trips. Also voltage dips that accompany faults for more than 1 to 1.5 seconds lead to induction motor stalling and voltage collapse.

The overload withstand characteristic of transformer and over current relay characteristic are shown in Fig 4. The over current relay characteristic lies far below the transformer withstand characteristic and will initiate premature tripping if used in over load region. If at all over load protection is to be provided, its characteristic must lie just below the withstand characteristic as shown.

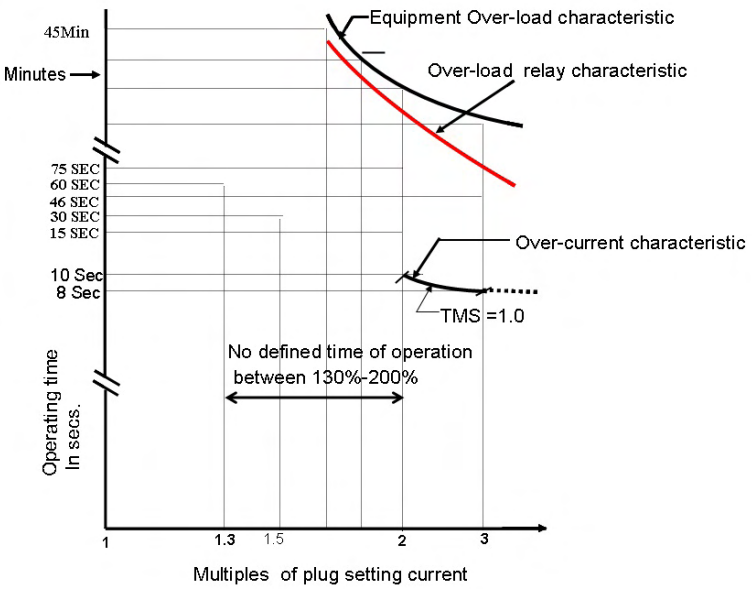

Fig 4 Over-current and Over-load characteristics

Consider the network shown in Fig 5. The major loads are motors. Bimetal for LT motors and thermal element of MPR (Motor Protection Relay) for HT motors, offer over load protection. Every transformer has built in over load protection through OTI and WTI (Oil and Winding Temperature Indicators). Hence in practice, there is no necessity to use over current relays for over load protection.

The over current relay is of go / no-go type. At any instant, if the current exceeds the set value for specified time, it initiates tripping. It does not have memory.

The over load relay, on the other hand, has memory. It takes into account the past history – the protected object is already very hot, hot, cold, etc. It tries to imitate the thermal image of the object. For the same amount of over load, the tripping time can be very different depending on past history.

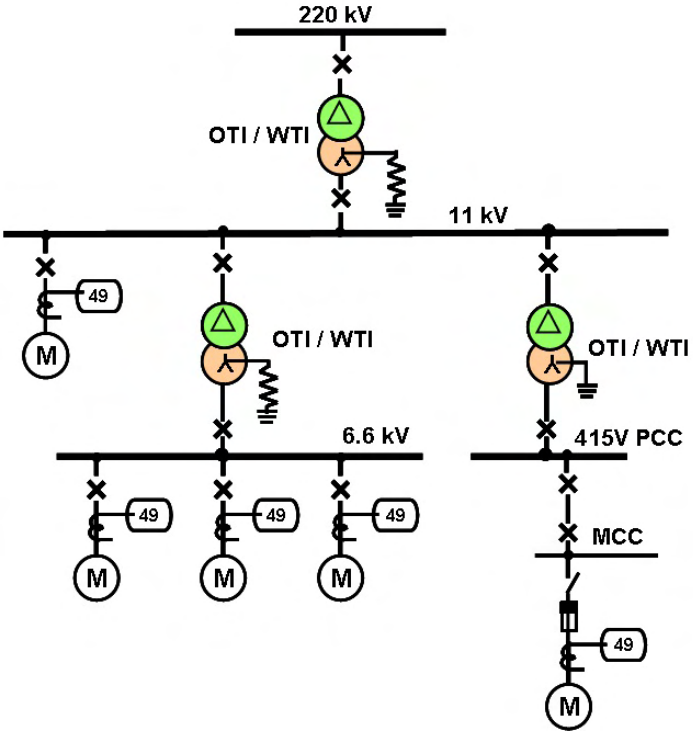

Fig 5 Power network

4.0 Over load protection of HT motors

The thermal unit (I_{TH}) of composite MPR protects the motor against over loads. The sensing current for thermal unit takes both positive and negative sequence currents into account. Since a small negative sequence current can cause large thermal stress, it is given more weightage. The current fed into thermal element is given as:

$I_{EQ} = \sqrt{(I_{POS}^{2} + k\, I_{NEG}^{2})}$, where k is typically between 3 to 6. Let the motor be operating on rated load (I_{POS} = 1 pu). Assume the unbalance in supply voltage is 5%. The negative sequence reactance of motor is about 16%. The resultant negative sequence current is: I_{NEG} = 0.05 / 0.16 = 0.31 pu. The current sensed by thermal element for k =6 will be,

$$I_{EQ} = \sqrt{1^2 + \left(6 \times 0.31^2\right)}$$

$$= 1.26 \text{ pu.}$$

Thus the thermal element also acts as a backup to negative sequence element of MPR.

To set the thermal element, motor withstand characteristics and relay characteristics are required and this is where the problems starts. A typical motor thermal withstand characteristic is shown in Fig 6. Actually this curve is *not* of much use as accurate interpolation in the region of interest (110% to 140%) for overload is not possible. Some times the curve itself starts from 140%! Values from 150% to 600% are of least practical significance.

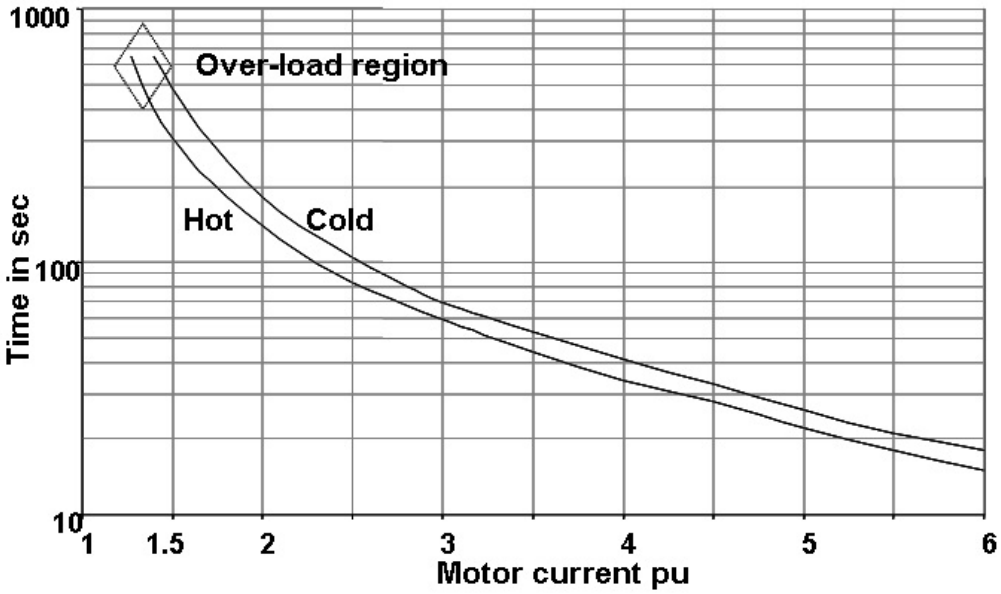

Fig 6 Motor thermal withstand characteristics

The starting characteristic of induction motor is shown in Fig 7.

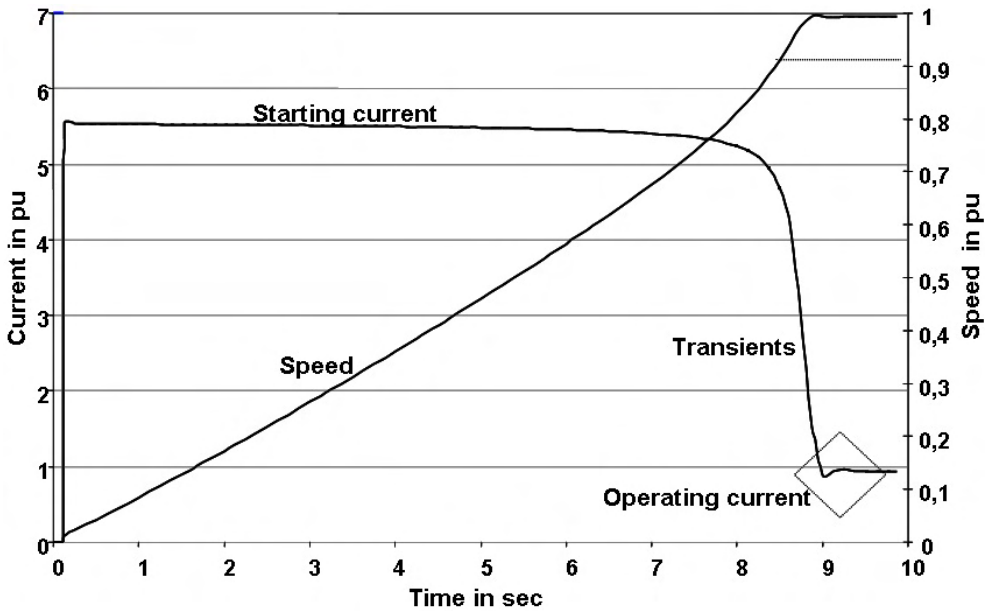

Fig 7 Starting characteristics of Induction Motor

During normal running condition the motor current is from 30% to 100%, during over load condition it is from 100% to 140% and during starting / stalling condition it is about 550 to 600%. Except for transients, sustained operation of motor in the region of 150% to 600% is not practical. Either the motor operates in the normal / over load region or it stalls. *Hence, it is recommended that the user must insist the motor vendor to furnish the withstand data in tabular form as illustrated below:*

% Current	Hot withstand time(sec)
110	3000
120	300
130	150
140	100
150	70

Some times, even the relay characteristics suffer from the same deficiency. A typical one is shown in Fig 8. Again in the region of interest of 110% to 140%, interpolation is very approximate. *The relay manufacturer can give the characteristic in terms of an expression valid in the region of interest.*

A remark about 'numerical relay' is relevant here. The user is cautioned against false sense of 'accurate protection' when the input data itself for motor hot and cold withstand times are highly approximate in the overload region.

It is not enough for the motor vendor to give only thermal heating time constant τ as the user may not know how to generate withstand curve from τ. Ultimately the user needs to fit the relay curve just below the motor curve (Fig 4).

In older version of relays, thermal element may sometimes pick up during motor starting and the thermal setting has to be raised. In modern relays, thermal element can be disabled during starting (clip control logic) and thus avoid nuisance tripping.

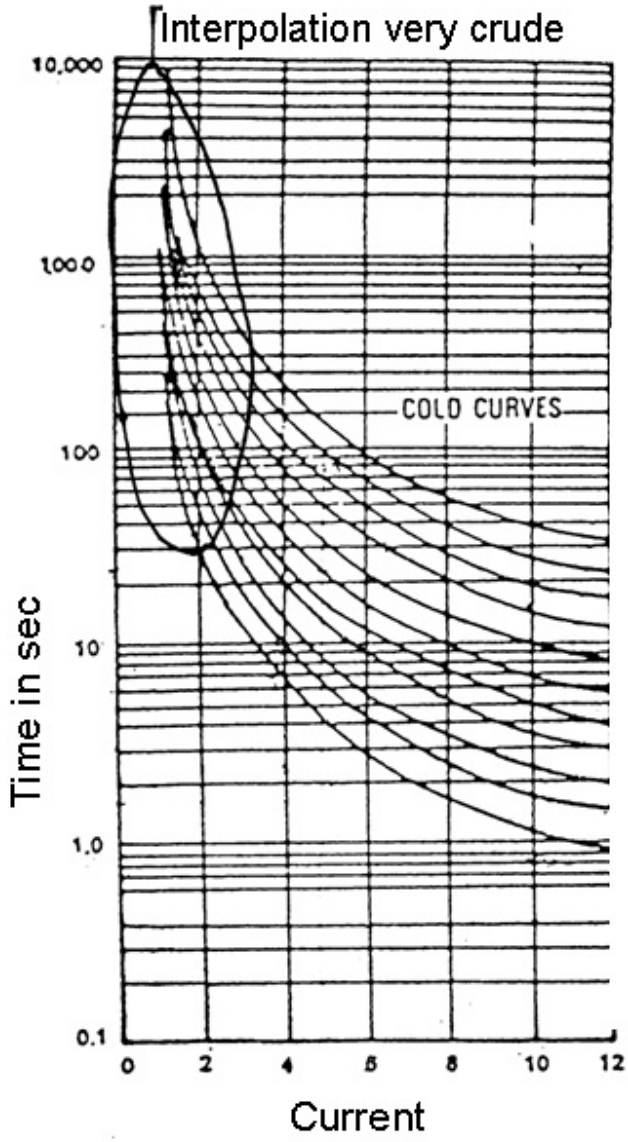

Fig 8 Relay Curve

In this case, back up to stalling protection by thermal element is not available if motor stalls during starting. However this is a rare occurrence.

4.1 Remarks on use of RTD

The over load protection based on current sensing is not fail-safe. It does not take cognizance of cooling circuit status. Even for normal current flow, the temperature rise can be high if cooling circuit fails. Finally the proof of pudding is temperature. If temperature rise is within limits, the motor is safe and beyond the limits, it has to be tripped. RTD and thermistor enable direct measurement of temperature. RTD location is important, as it must reflect winding 'hot spots'. Generally it is located where the hot air leaves the machine. RTD (PT 100) characteristic is shown in Fig 9.

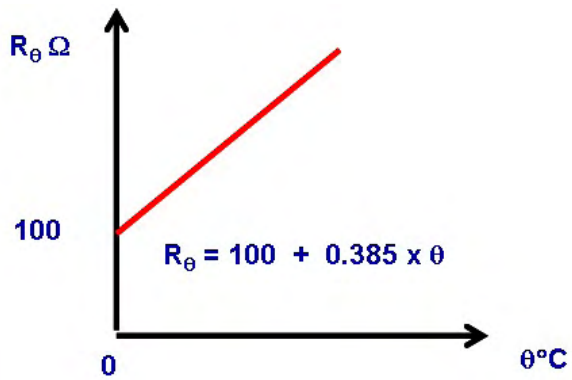

Fig 9 RTD characteristic

Since the characteristic is linear, it can be used for both measurement and trip/alarm. Thermistor characteristic is shown in Fig 10.

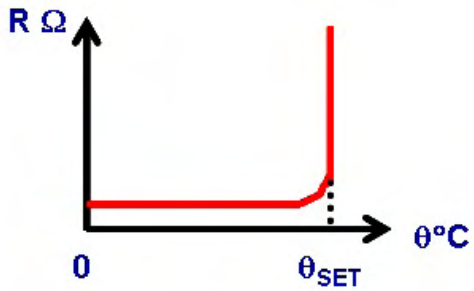

Fig 10 Thermistor characteristic

Since its characteristic is nonlinear, it can be used for only for trip/alarm. Modern numerical relays can accept RTD / thermistor inputs directly and there is no need for separate scanners. The practicing engineer has more faith on protection based on RTD / thermistor as it truly reflects the thermal state of machine. Sometimes, modern MPR is fitted to an old motor whose thermal withstand

characteristics are unknown. In this case, it is more sensible to provide over load protection based on RTD readings rather than on 'fictitious' I_{TH} setting.

Three wire RTD measurement is generally used (Refer Fig 11). The lead resistance between relay and motor does not significantly distort temperature readings. A precise current I_C is injected at Y and voltage is measured between Y and Z. Then the same current I_C is injected at X and voltage is measured between X and Z.

$V_{YZ} = I_C (2R_L)$

$V_{XZ} = I_C (2R_L + R_{RTD})$

$\Delta V = V_{XZ} - V_{YZ} = I_C (R_{RTD})$

$R_{RTD} = \Delta V / I_C$

From the RTD characteristic, temperature can be derived.

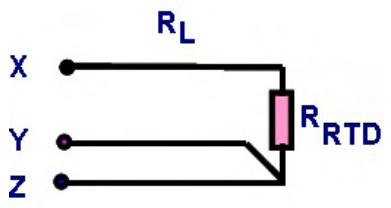

Fig 11 Three wire RTD

Among the five major protection elements of MPR (I_{TH}, I_{STAL}, I_2, I1(t) and I_O), the maximum discussion is usually on I_{TH} and as anticipated has least impact. The reason why thermal is not a serious issue is because the way motor specification has evolved. Presently insulation class of motors is specified as F / B i.e., class 'F' insulation but cooling circuit designed to limit temperature rise as per class 'B'. The average expected insulation life graph is shown in Fig 12. The temperature limit for Class 'B' is 130°C and for Class 'F' is 155°C. *They are defined with respect to 20,000 hours of operation.* The life doubles for approximately every 10°C decrease in temperature. Consider the machine designed for F / B. At 130°C, the margin in life between class 'F' and class 'B' is 5 times (100,000/20,000). The effect of overload is ultimately temperature rise and since there is ample margin in insulation life, the impact of overload is exaggerated.

Some standards specify Service Factor (SF). A motor with SF of 1.1 can work at 10% over load without the danger of immediate failure but may result in shortening of insulation life. It is akin to specifying insulation class as F / B.

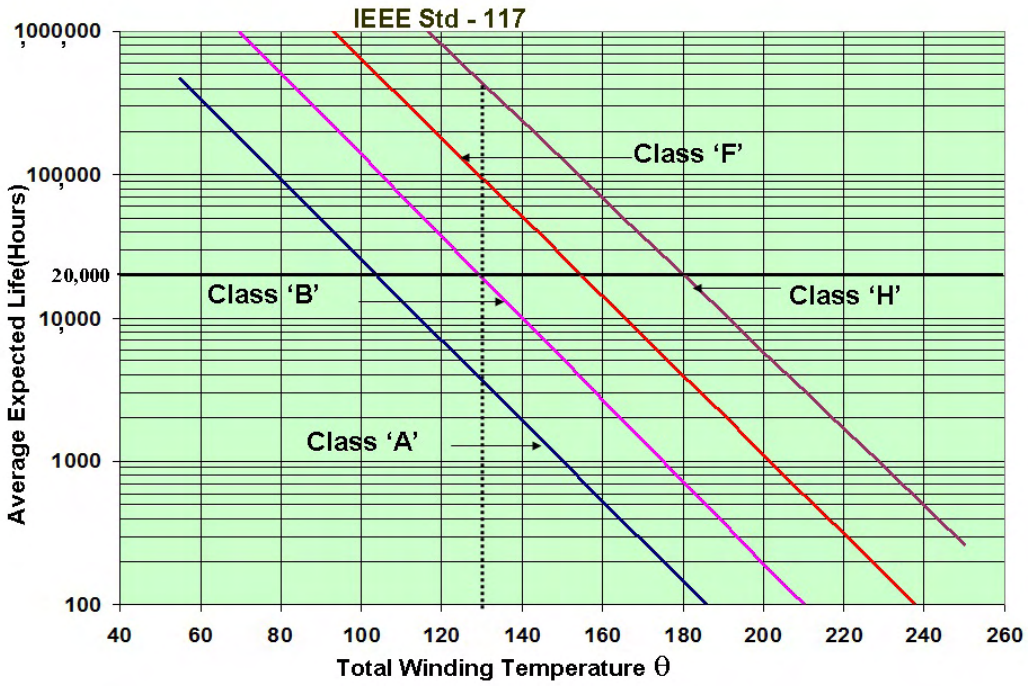

Fig 12 Insulation life

5.0 Over load protection of transformer

The over load withstand time is shown below:

% Current	Current Withstand time (Minutes)
130	120
145	80
160	45
175	20
200	2

When the over load withstand time is in minutes, it is absurd to expect over current relays to offer sensible protection against over loads. As stated earlier, OTI and WTI offer the necessary protection.

The over load on transformer results in increase in oil and winding temperatures. The life of insulation is affected correspondingly. When one talks of transformer life, it is essentially life of insulation. The relative rate of using insulation life is given in Fig 13.

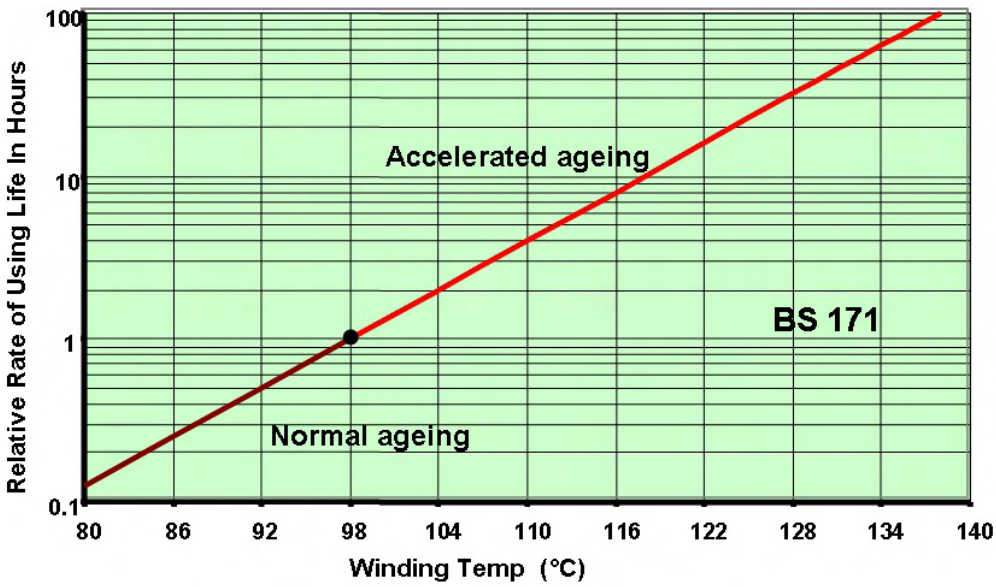

Fig 13 Transformer Insulation Life

If winding temperature (θ_W) is maintained less than 80°C, loss of insulation life is negligible. If θ_W is greater than 80°C, relative rate of using insulation life increases. The rate of using insulation life doubles for every 6°C increase in θ_W. If the transformer is operated at 104°C, for every hour of operation 2 hours of insulation life is lost. If the transformer is operated at 110°C, for every hour of operation 4 hours of insulation life is lost. To illustrate the concept further, four different loading conditions are shown in Table 1.

Table 1				
Period 1	**Period 2**	**Period 3**	**ΣLoss**	**Loss – Hrs/day**
24 Hours @80°C			24 x 0.125	3
24 Hours @98°C			24 x 1	24
9 Hours @80°C	7 Hours @98°C	8 Hours @104°C	9 x 0.125 + 7 x 1 + 8 x 2	24
24 Hours @104°C			24 x 2	48

Assume the transformer life is 25 years.

In case 1, transformer is loaded such that all the time θ_W is less than 80°C. The loss of life is only three hours per day of operation. Even after 25 years, residual life is left.

In case 2, transformer is loaded such that all the time θ_W is 98°C. The loss of life is 24 hours per day of operation. For every day of operation, one day life is lost. After 25 years, no residual life is left.

In case 3, transformer is loaded for 9 hours at 80°C, 7 hours at 98°C and 8 hours at 104°C. Here also, for every day of operation, one day life is lost. After 25 years, no residual life is left as in case 2. But the point to be noted is that *over loading per se is not detrimental if the transformer operates for some time under loaded* (θ_W is 80°C or less).

In case 4, transformer is loaded such that all the time θ_W is 104°C. The loss of life is 48 hours per day of operation. For every day of operation, two days life is lost. After 12 to 13 years, the transformer needs to be replaced.

The following guidelines for transformer over loading are suggested:

(i) For 'normal' duty cycle, current shall not exceed 150% I_{RAT}.

(ii) For 'emergency' duty, current can exceed 150% I_{RAT} provided associated cable, switchgear, tap changer and bushing are suitably rated.

(iii) Under no circumstances, winding temperature shall exceed 140°C and oil temperature shall exceed 115°C.

(iv) Avoid operation of OLTC if current exceeds the rated current.

(v) Periodically calibrate WTI as per IEC 354.

6.0 Over load protection of generator

The over load withstand time (as per ANSI C50.13) is shown below:

% Current	Withstand time (secs)
116	120
130	60
154	30
226	100

In addition, some manufacturers state that their alternator can be loaded up to 110% for one hour every 12 hours. It may be emphasized here that whether the prime mover can supply the corresponding MW shall be checked.

The current relay used for over load protection is wired *only for alarm*. Typically it is set for 115% and 30 seconds. It is left to the operator to take corrective action to relieve the over load on the machine.

June 2004, IEEMA Journal, Page 30 to 34

As in motor, the most reliable over load protection is provided by RTDs on stator. They not only respond to current but also to cooling circuit healthiness. A typical cooling scheme is shown in Fig 14. The temperature rise is influenced by inlet cooling water temperature, cooling water flow rate, hydrogen pressure & purity and integrity of heat exchanger in addition to stator current. Typical setting is 120°C for alarm and 130°C for trip. For machines with class 'F' insulation, operating at 120°C, expected life is 200,000 hours (Refer Fig 12). Assuming 6500 hours per year of operation, operating life is about 31 years.

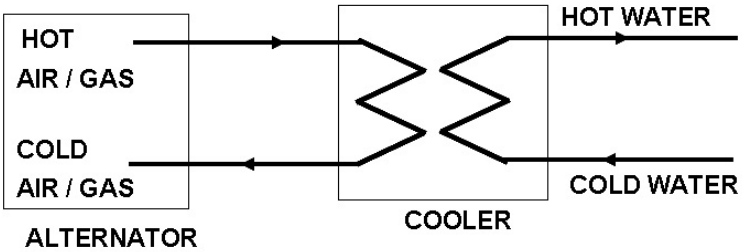

Fig 14 Alternator Cooling

7.0 Conclusion

The subtle differences between over load and over current protection were clarified. The temptation to set over current relays for over load protection shall be avoided. It is generally recognized that temperature sensing offers reliable protection for over loads. The specific features for over load protection of motor, transformer and generator were elaborated. The relationship among over load, temperature rise and insulation life was discussed. The ideas presented here will hopefully make the practicing engineer to take healthy but *not* alarmist view on over load protection.

8.0 References

[1] Power system protection: P M Anderson.

[2] J & P Transformer Handbook: A C Franklin and D P Franklin.

[3] Guide for over loading of oil-immersed transformer: IS 6600.

[4] Performance and design of alternating current machines: M G Say.

June 2004, IEEMA Journal, Page 30 to 34

ieema journal

Earthing of Electrical System – Part I

Dr K Rajamani,

Reliance Infrastructure Ltd., MUMBAI

(August 2004, IEEMA Journal, Page 37 to 40)

ieema journal

Earthing of Electrical System – Part I

Dr K Rajamani, Reliance Infrastructure Ltd., Mumbai

1.0 Introduction

Earthing of electrical system is a unique topic. It is very important from the view of safety and protection. The discussions usually centre on meeting local regulatory requirements. But there is a lot of myth in this area carried from the past. The objective of this article is to clarify and clear these myths and bring out the salient features that truly improve the earthing system performance.

2.0 Distinction between grounding and earthing

Grounding implies connection of *current carrying* parts to ground. It is mostly either generator or transformer neutral. Hence it is popularly called 'neutral grounding'. Grounding is for *equipment safety*. In case of resistance grounded system, it limits the core damage in stator of rotating machines. In case of solidly grounded system, substantial ground fault current flows enabling sensitive fault detection and fast clearance.

Details of grounding practices will be covered in another article.

Earthing implies connection of *non-current carrying* parts to ground like metallic enclosures (Fig 1).

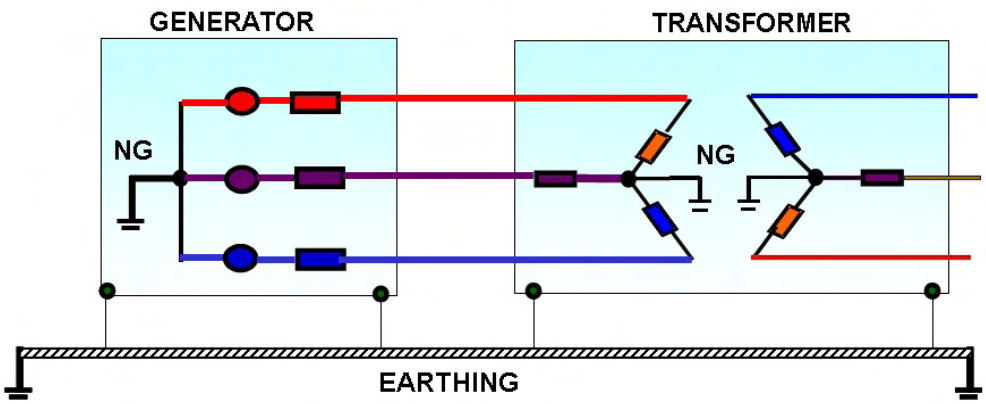

Fig 1 Neutral Grounding and Earthing

Another term used rather loosely is 'equipment grounding'. Earthing is for *human safety*. Under balanced operating conditions of power systems, earthing system does not play any role. But under ground fault condition, it enables the ground fault current to return back to the source without endangering human safety.

August 2004, IEEMA Journal, Page 37 to 40

3.0 Earth as conductor

Contrary to popular perception, 'mother earth' is a bad conductor. Resistivity (ρ) of earth is typically 100ΩM. In comparison, ρ of copper is $1.7 \times 10^{-8}\Omega$M and GI is $10^{-7}\Omega$M. Taking 25x4mm Cu as reference, to obtain the same resistance, the size of GI will be 65x10mm. The corresponding figure for earth is 800x 800meters (158acres)! This comparison clearly shows that wherever possible, metallic conductor is a preferred alternative to earth to bring the fault current back to the source.

4.0 Electrode resistance to earth

A lot of conceptual confusion arises as the practicing engineer extrapolates 'conventional ohms law resistance' to electrode resistance. It does *not* reflect the situation where you apply a voltage across the electrode and measure the current and the resulting resistance is less than, say, 1Ω. For electrode resistance to earth, current is injected into the earth by electrode and the electric field travels through the earth. The voltage appears at certain distance from electrode and the resulting impedance is 'electrode resistance to earth'. The concept is similar to CT where the flow of primary current results in voltage appearing across CT secondary that drives the current through the connected burden (Fig 2).

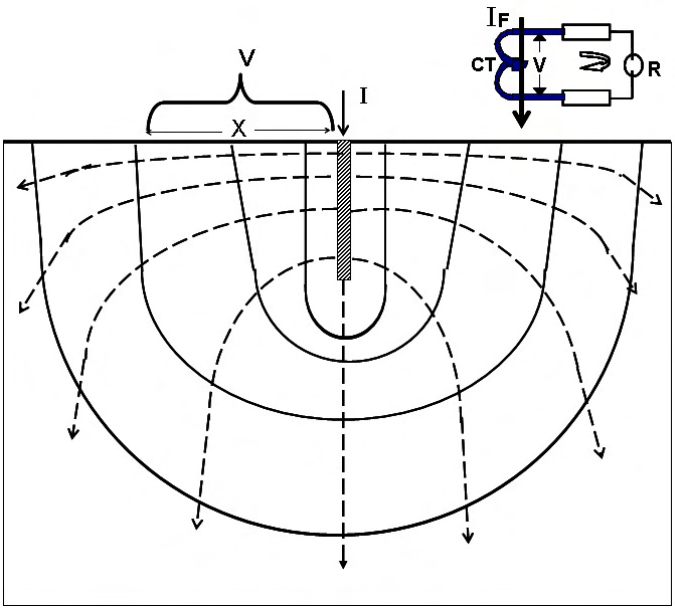

Fig 2 Resistance Area of driven earth rod

In majority of power system applications, current is injected into earth at the point of fault for a very short duration. In High Voltage Distribution System (HVDS) applications, load current (single phase) is injected into earth on a continuous basis if earth return is used.

5.0 Hemispherical electrode

Consider a hemispherical electrode used for injecting the current. Current flows through a series of hemispherical shells of earth of continuously increasing cross section (Fig 3). The resistance offered by earth to spread of electric field is given by,

$$R_x = \int_0^x \frac{\rho dx}{2\pi X^2}$$

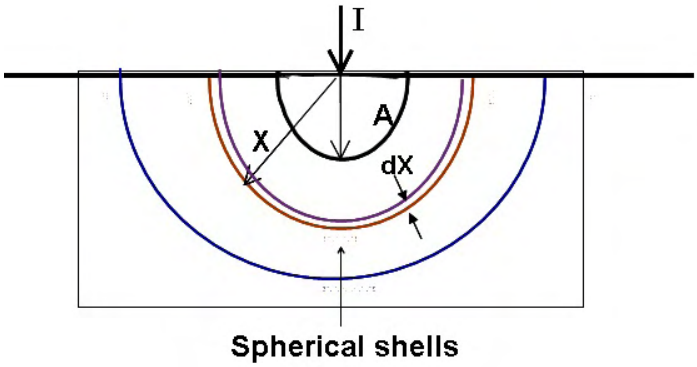

Fig 3 Resistance to earth of hemispherical electrode

The resistance as a function of distance from electrode is shown in Fig 4.

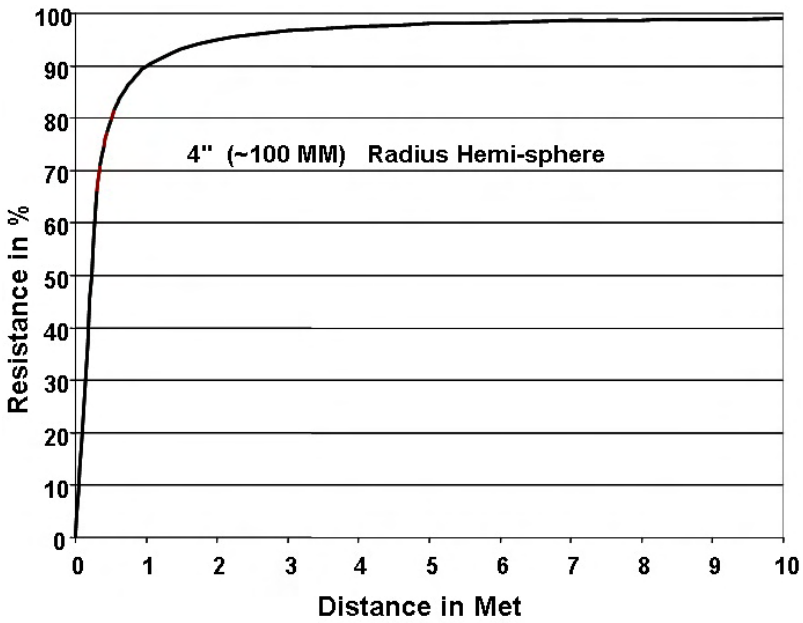

Fig 4 Resistance to earth of hemispherical electrode

The most striking aspect of this curve is that almost 95% of final resistance is contributed by soil within 5 meters from electrode. Consider two locations A and B 100 KM apart with respective earth grids. Assume current is discharged at A. Only the soil within first five to 10 meters from A offers substantial resistance. The resistance offered by earth

subsequently to reach B is very minimal. This confirms our practice of treating earth pits. By treating the soil *locally* around the electrode we are able to reduce electrode resistance, as the influence of earth away from electrode is minimal.

Another way to appreciate 'local effect' is based on the fact that earth with its huge mass offers almost ideal equipotential surface. A very large charge is required to change earth potential every where. Any disturbance due to current injection is felt only locally.

6.0 Pipe electrode or driven rod

The resistance area for this case is shown in Fig 2. At sufficient distance from electrode, the electric field encounters shells that are almost hemispherical. Hence the conclusions drawn for hemispherical electrode are also valid here.

The resistance of pipe electrode (Fig 5) is given by:

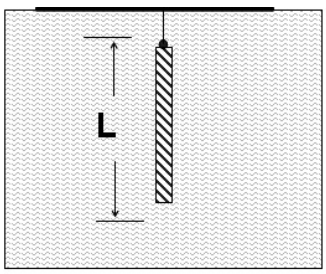

Fig 5 Pipe electrode

$$R = \left(\frac{\rho}{2\pi L}\right)\left[ln\left(\frac{8L}{\Phi\, x\, 2.7183}\right)\right] \qquad \text{.....(1)}$$

L: Length in Met; Φ: Diameter in Met

The variation of resistance with length and diameter is given in Fig 6.

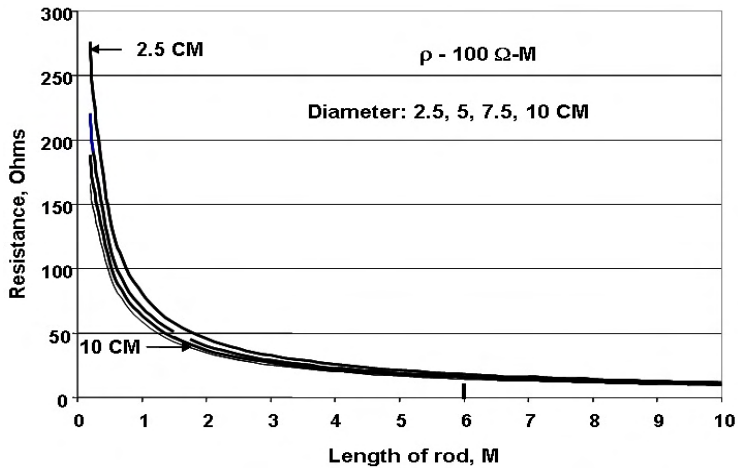

Fig 6 Resistance of rod electrode

The length of electrode has major impact while the diameter has very minor influence. As an example, consider the case for length of 6M.

For Φ = 2.5CM, R = 16.4Ω

For Φ = 10CM, R = 15.3Ω

For 300% increase in diameter, resistance decreases by paltry 7%.

7.0 Strip or horizontal wire electrode

The earth mats of EHV switchyards extensively use strip electrodes. The resistance of strip electrode (Fig 7) is given by the Ryder's formula:

$$R = \frac{\rho}{2\pi L}\left[ln\left(\frac{8L}{T}\right) + ln\left(\frac{L}{h}\right) - 2 + \left(\frac{2h}{L}\right) - \left(\frac{h^2}{L^2}\right)\right] \qquad \text{.....(2)}$$

L: Length in Met

h: Depth in Met

T: Width in Met (for strip)

:2 x diameter in Met (for wire)

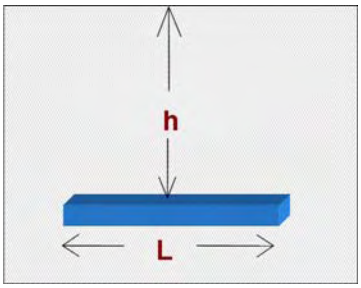

Fig 7 Strip electrode

The variation of resistance with length and diameter is given in Fig 8.

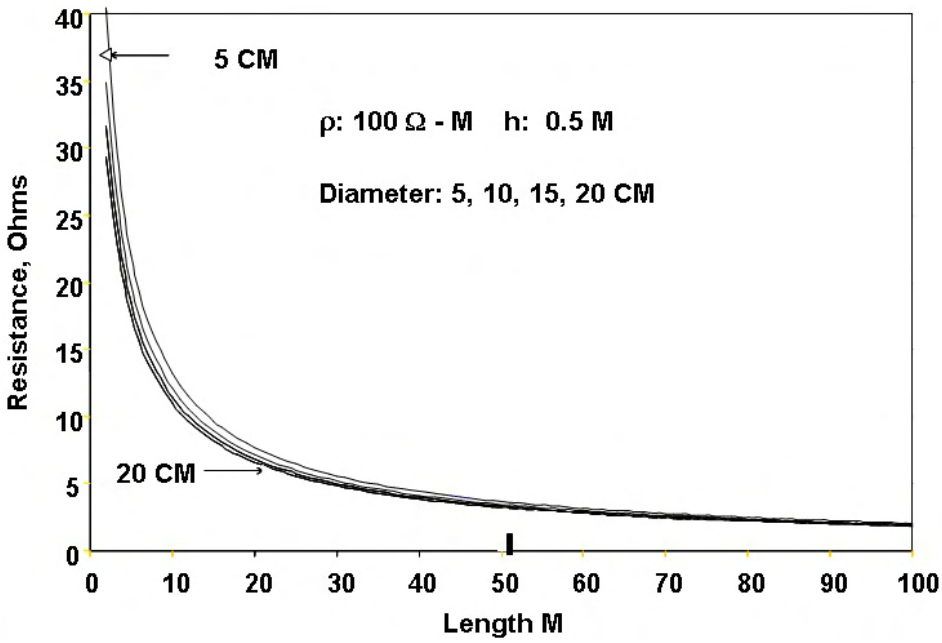

Fig 8 Horizontal wire electrode

As in pipe electrode the length of electrode has major impact while the diameter has very minor influence. As an example, consider the case for length of 50M.

For Φ = 5CM, R = 3.7Ω

For Φ = 20CM, R = 3.2 Ω

For 300% increase in diameter, resistance decreases by only 14%.

8.0 Influencing factors for electrode resistance

The major factor is the *length*. Diameter/width (cross section) has very minor influence. The other interesting observation is that the electrode resistance is not dependent on type of electrode material like Cu, Al or GI. It is a function of physical dimensions (mainly length) and not on physical properties. A horizontal earth strip of 75x10mm Cu and 45x10mm GI, both of same length will offer almost same electrode resistance! In conventional ohms law resistance, increased cross sectional area or use of Cu would signify reduced resistance but they are irrelevant as regards electrode resistance to earth is concerned.

Finally, the soil resistivity (ρ) has a linear impact.

9.0 Plate electrode

In early days only plate electrodes were used. It was presumed that to get low electrode resistance to earth, surface area should be large (again the extrapolation of conventional ohms law resistance). In some cases efforts were made to cover the entire site with plate electrodes! This fallacy has persisted for a long time. In Fig 9 one electrode which is a solid plate and the other an annular ring but both of them with same radius of 50CM are shown. Calculations show that resistance to earth in both cases is 29.2Ω.

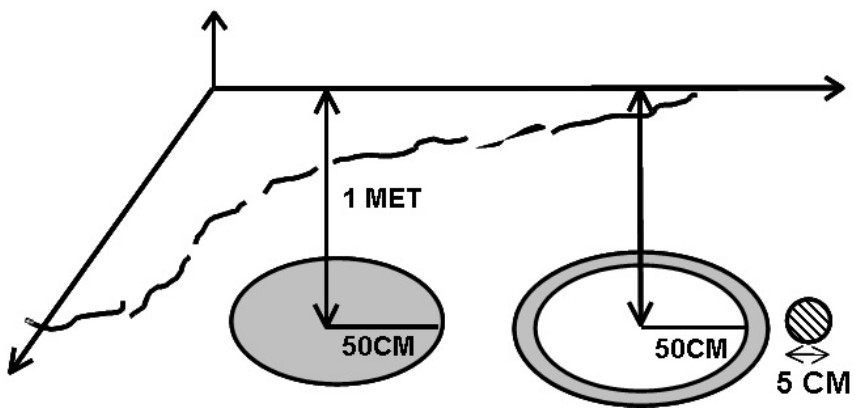

Fig 9 Resistance to earth of plate electrode

In Fig 10 plate electrode and strip electrode are shown having same volume. But resistance to earth of plate electrode is almost three times that of strip electrode. Intuitively it can be seen that linear dimension of plate electrode is 4M(perimeter) while that of strip electrode is 13M thus affirming the hypothesis that electrode resistance is dominated by 'length' of electrode buried. Thus it is concluded that plate electrode is very inefficient. It is rarely used in modern times.

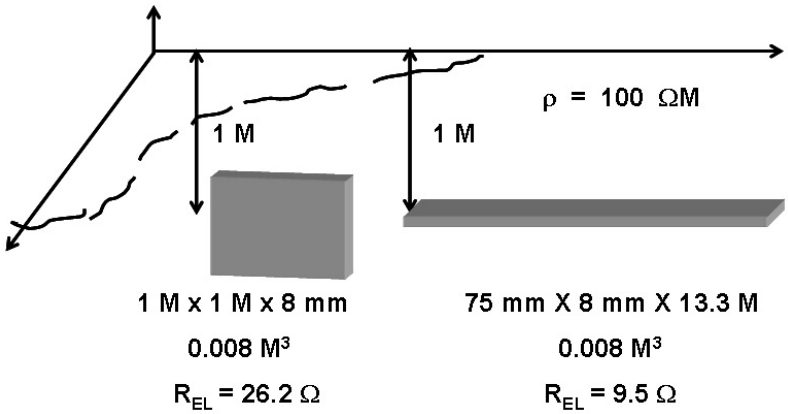

Fig 10 Resistance to earth of plate / strip electrode

10.0 Parallel electrodes

To obtain low effective earth grid resistance, electrodes are connected in parallel. If resistance to earth of one electrode is 2Ω, the common perception is that effective resistance will be 1Ω if two such electrodes are connected in parallel. This is again due to our extrapolation of 'conventional ohms law' concept. Theoretically, the effective resistance will be half of 2Ω *provided the separation distance between electrodes is adequate*. For discharging the electric field effectively, each electrode needs exclusive soil below it. If the rods are too close, resistance area of one electrode will interfere (Fig 11) with that from other and expected gain is not realized.

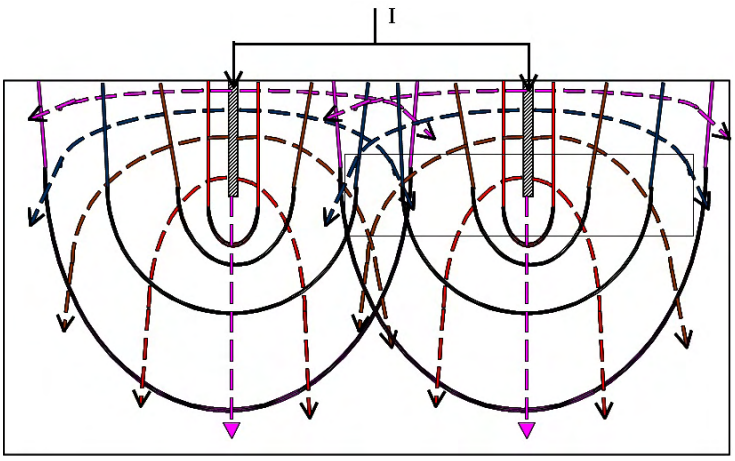

Fig 11 Overlapping resistance areas of two earth rods

Fig 12 shows the relationship between percentage effective resistance and separation distance. As a rule of thumb, if the rod length is L, separation distance shall be 2L (Fig 13).

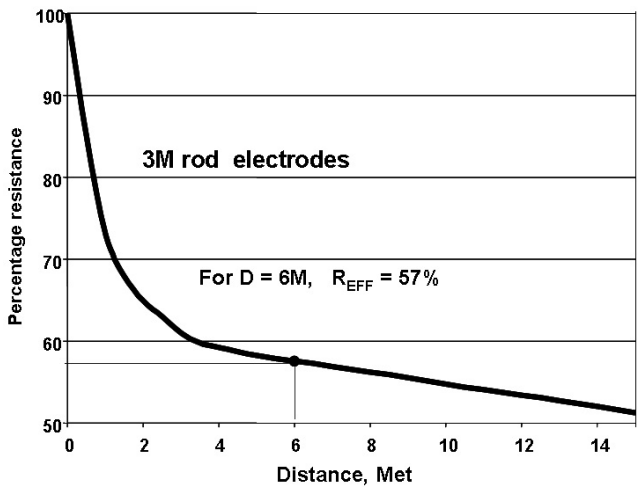

Fig 12 Effective Resistance Vs Separation distance

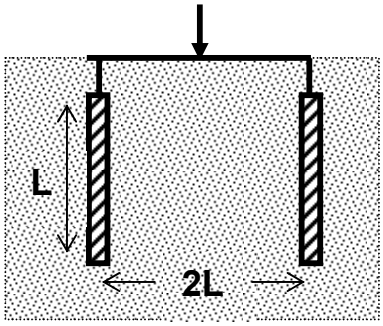

Fig 13 Separation distance

We will now detour a bit to review the sequence impedance of transmission line. Consider a D/C EHV line with panther conductor (Fig 14).

The following values can be obtained from any line parameter evaluation program considering only one circuit or both the circuits:

	S/C	D/C
Z_{POS}(Ω/KM)	0.15 + j 0.41	0.08 + j 0.22
Z_{ZERO}(Ω/KM)	0.37 + j 1.29	0.29 + j 1.04

Positive sequence impedance of D/C line is almost 0.5 times S/C line as expected. But Zero sequence impedance of D/C line is only about 0.8 times of S/C line. The intuitive rational for this is that positive sequence does not involve earth return while zero sequence involves earth return. Only if the separation distance between the two circuits is large, they will behave like two single circuit lines and the resulting effective zero sequence impedance will be nearly 0.5 times for S/C line. This is seldom achieved in practice.

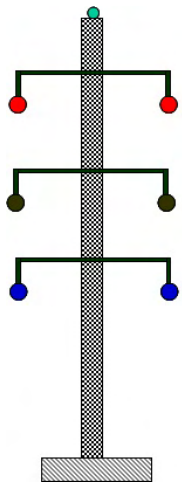

Fig 14 D/C Line

Fig 15 shows the relationship between percentage effective resistance and separation distance for three-electrode case. The electrodes shall be at the corner of equilateral triangle with side 2L where L is the rod length.

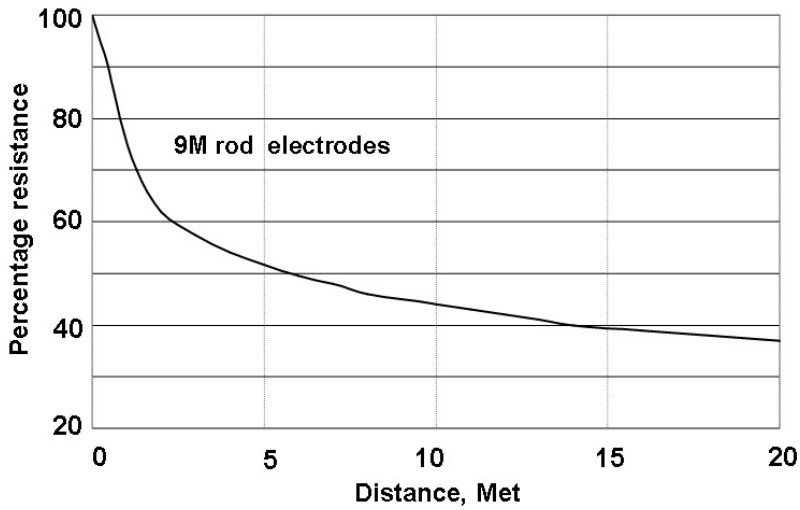

Fig 15 Effective resistance Vs Separation distance (3 rods)

11.0 Resistance of earthing grid

In EHV switchyard, earthing grid is formed by a mesh of horizontal strip electrodes and vertical rod electrodes (Fig 16).

The resistance to earth of the entire grid is given by the famous Sverak formula:

$$C_1 = \frac{1}{L};\ C_2 = \frac{1}{\sqrt{(20A)}};\ C_3 = 1 + h\sqrt{\left(\frac{20}{A}\right)}$$

$$R_G = \rho\left[C_1 + C_2\left\{1 + \left(\frac{1}{C_3}\right)\right\}\right] \qquad \text{.....(3)}$$

h: depth of grid, Meter

A: area of earthing grid, M^2

L: total length of buried conductor including rod electrodes in Meter

ρ: resistivity in ΩM

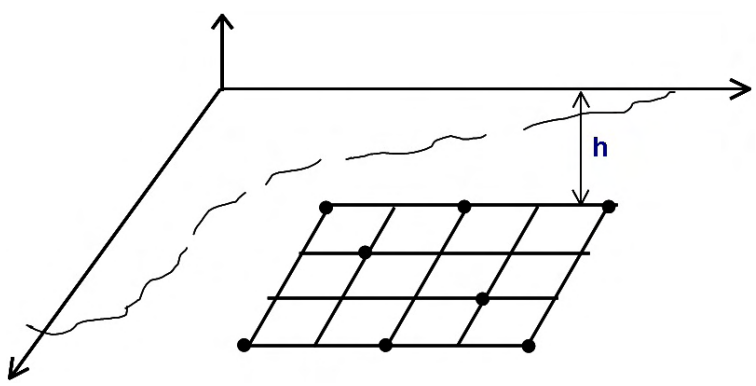

Fig 16 Switchyard Earthing grid

Consider the example shown in Fig17.

Gross errors can arise if the evaluation is done based on formula for individual electrodes as shown below.

For vertical rod electrodes,

ρ =100ΩM; L = 6M; Φ = 0.05M (2")

Applying Eqn (1), R = 15.5625Ω

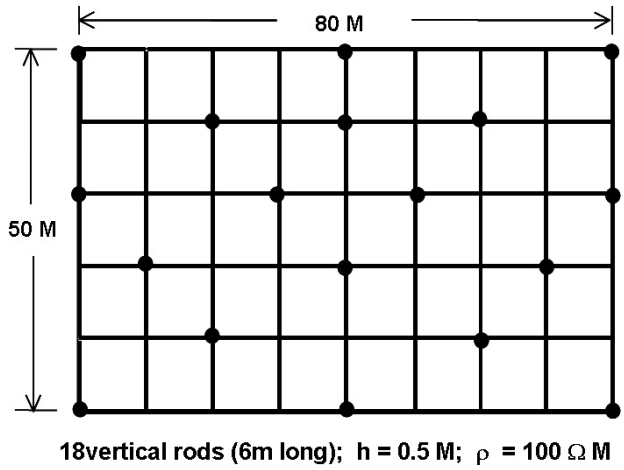

Fig 17 Rectangular Earthing grid

For 18 rods in parallel, R_V = 15.5625/18 = 0.8646Ω

For horizontal electrodes,

T = 0.1M

$L = L_H = 9 \times 50 + 6 \times 80$

$= 930M$

Applying Eqn(2), $R_H = 0.2866\ \Omega$

Effective grid resistance $R'_G = R_V // R_H$

$= 0.2152\ \Omega$

But as per Sverak formula {Eqn (3)},

$A = 80 \times 50$

$= 4000M^2$

$L_V = 18 \times 6$

$= 108M$

$L = L_H + L_V$

$= 1038\ M$

$h = 0.5\ M$

$R_G = 0.79\ \Omega$

It is found that R_G is much greater than R'_G derived from series and parallel combination of horizontal and vertical electrodes. This is due to the fact that resistance areas of earth for individual electrodes are not independent and partially overlap which is accounted for in

Sverak's formula. If GPR (Ground Potential Rise), step and touch potentials are calculated based on R'_G, it could be unsafe design.

The earth grid resistance, as per Sverak's formula, also is not dependent on type of electrode material like Cu/Al/GI or cross section of conductor. It is a function of physical dimensions (mainly length) and not on physical properties.

12.0 Methods to reduce electrode resistance to earth

From Equations (1) to (3), two possibilities exist.

One method is to reduce soil resistivity (ρ) to a low value. Typical figures for different types of soil are as follows.

Soil type	Wet soil	Moist soil	Dry soil	Bed rock
(ρ-ΩM)	10	100	1,000	10,000

Soil resistivity could be reduced by treating the soil (watering, adding coke, wood charcoal, bentonite clay). Common salt is also a popular additive. Performance over time is shown in Fig 18.

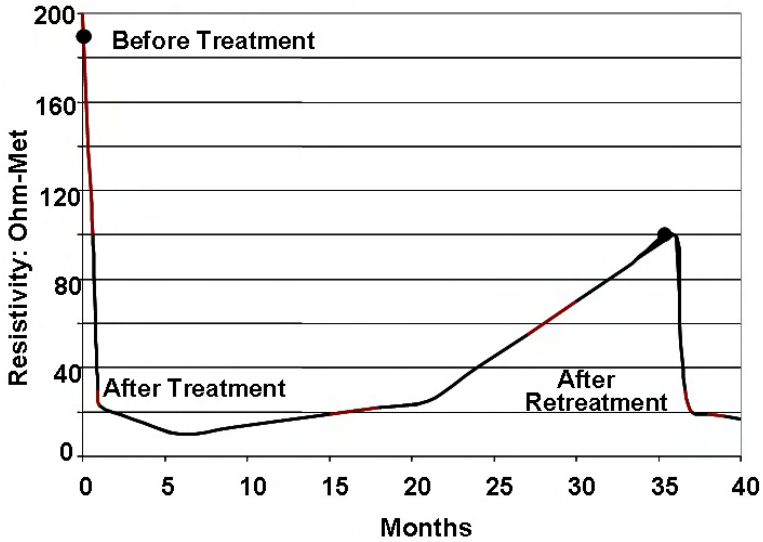

Fig 18 Effect of artificial treatment

After treatment there is gradual decrease in soil resistivity. However there is a gradual increase in soil resistivity with time as salt is washed away by continual water seepage. Hence re-treatment is required to be carried out once in about three years as a regular maintenance practice.

The second method is to increase the length of buried conductor to the maximum extent possible. This is a one step procedure and the increased cost has to be borne at the beginning.

If parallel electrodes are considered for individual earth pits to get low resistance, it must be emphasized that unless sufficient spacing exists between electrodes, desired reduction is not realized in practice.

13.0 Electrode sizing

The choices for the type of material and size are only with respect to the amount of fault current to be discharged to earth. The current density (A/mm^2) as per IS-3043 is given below:

Material	Cu	Al	GI
0.5 sec rating	290	178	113
1 sec rating	205	126	80

Earthing grid for EHV switchyards are designed for 0.5 sec duty and for others 1 sec duty is selected.

As an example, consider an EHV earthing grid of GI to discharge 40 kA. The minimum cross section required is 353 mm^2 (= 40,000/113). The selected size is, say, 50x8mm GI strip electrode.

Except for carrying ground fault current for certain duration, neither the material type nor cross section plays any significant part in further earthing grid design. It may be mentioned here that they do not have significant influence on step and touch potentials either. This will be covered in a future article.

14.0 Conclusion

The basic concepts in earthing are brought out. Different types of electrodes and their resistance to earth are discussed. The major influencing factors on electrode resistance are length and soil resistivity. Neither the cross section nor material type has significant impact on electrode resistance. If multiple electrodes are used at the same location, there has to be minimum distance among them to get desired results. The ideas presented here will enable the practicing engineer to review existing earthing system and identify areas for improvement.

15.0 References

[1] IEEE Std 80 - 2000: Guide for safety in AC substation grounding.

[2] IS 3043: Code of practice for earthing.

[3] Earthing principles and practices: R W Ryder.

[4] Electrical earthing and accident prevention: edited by M G Say.

ieema journal

Earthing of Electrical System – Part II

Dr K Rajamani,

Reliance Infrastructure Ltd., MUMBAI

(May 2005, IEEMA Journal, Page 32 to 36)

ieema journal

Earthing of Electrical system – Part II

Dr K Rajamani, Reliance Infrastructure Ltd., Mumbai

1.0 Introduction

In Part I, fundamentals of earthing system like electrode resistance, factors influencing electrode resistance and electrode sizing were discussed. In this part we will graduate further towards EHV earth mat design considering human safety. The principles of Ground Potential Rise, step and touch potentials are explained. The concepts of earthing in LV and MV systems are brought out.

2.0 Human element

Electric 'shock' is possible only when the human body bridges two points of *unequal* potential. This is the reason why a bird can sit comfortably on a 220 kV line conductor without getting electrocuted as the voltage between its legs (IR drop) is insignificant.

Maximum tolerable current for a human body is about 160 mA for one second. If this limit is exceeded, it results in death due to ventricular fibrillation (heart attack). Allowable body current I_B (Amperes), for two body weights, as per IEEE Std-80 is given below:

$$I_B = \frac{0.116}{\sqrt{T_S}} \quad \textit{for a body weight of 50 Kg}$$

$$= \frac{0.157}{\sqrt{T_S}} \quad \textit{for a body weight of 70 Kg}$$

where T_S is the duration of current exposure (fault clearance time).

For various exposure times, the withstand currents are as follows:

Table 1

T_S	I_B(50 Kg)	I_B (70 Kg)
0.2 sec	259 mA	351 mA
0.5 sec	164 mA	222 mA
1.0 sec	116 mA	157 mA

For shorter duration, body can withstand higher current magnitude. The advantage of high speed protection (less than 100 msec) from human safety point of view is evident now.

The average value of human body resistance (R_B) under dry conditions is 8 to 9 KΩ. But for design purposes, conservative value of 1 KΩ is assumed, as per IEEE Std-80.

May 2005, IEEMA Journal, Page 32 to 36

3.0 Ground Potential Rise

Ground Potential Rise (GPR) is the voltage to which the earth mat is going to rise when it discharges the current. If I_G is the current discharged to earth and R_G is the earth grid resistance (Fig 1),

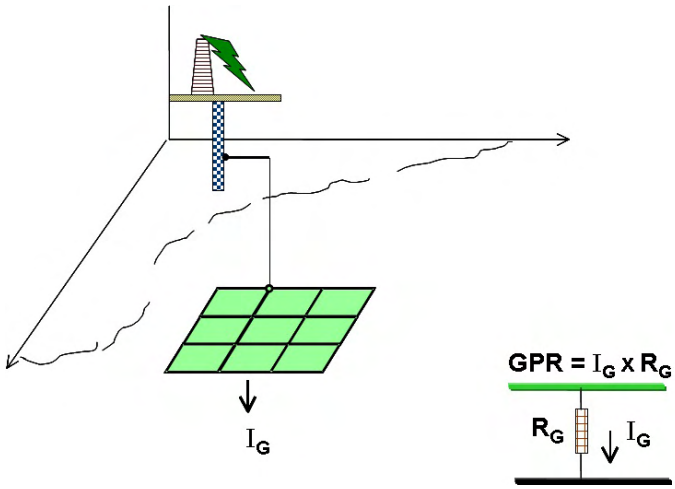

Fig 1 Ground Potential Rise

$GPR = I_G \times R_G$

$I_G = K \times I_F$

To emphasize the point that I_G is always *not* equal to ground fault current (I_F), three cases are considered.

3.1 Case 1

Fault is within the switchyard and transformer connection is star – delta (Fig 2). Entire fault current is discharged to earth to return to source 2. In this case, K = 1.

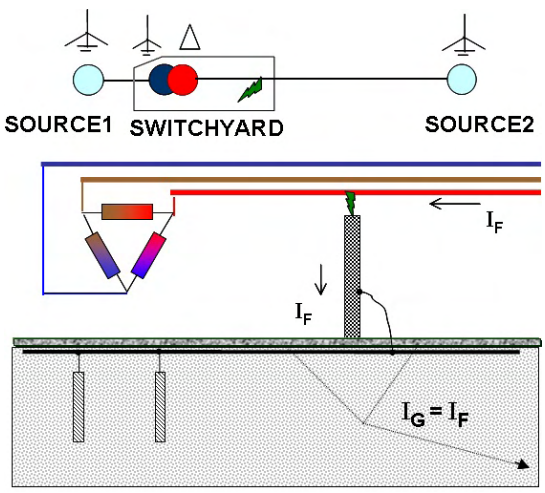

Fig 2 Fault within sub-station (star-delta)

May 2005, IEEMA Journal, Page 32 to 36

3.2 Case 2

Fault is within the switchyard and transformer connection is delta – star (Fig 3). Part of the fault current (I_{F1}) returns to local transformer via metallic conductor (earth mat) and does not contribute to GPR. The other part (I_{F2}) is discharged to earth to return to source 2 and contributes to GPR. In this case, K < 1.

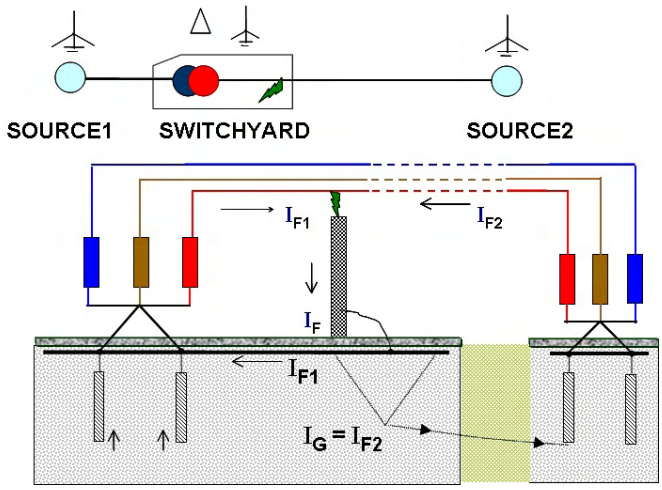

Fig 3 Fault within sub-station (delta-star)

3.3 Case 3

Fault is on transmission line and transformer connection is delta – star (Fig 4). Part of the fault current (I_{F1}) returns to transformer at source 1 via earth and contributes to GPR. The other part (I_{F2}) returns to source 2 via earth and contributes to GPR at the other switchyard. In this case also, K < 1.

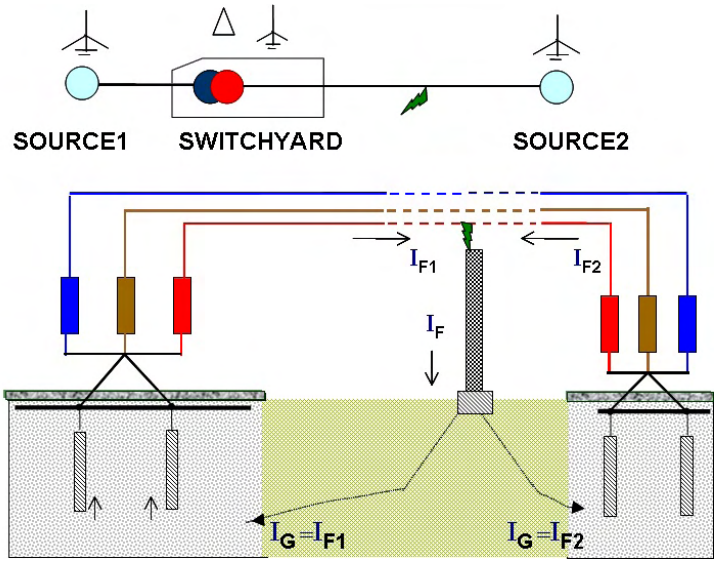

Fig 4 Fault on transmission line

4.0 Fault on transmission line

In case 3 we ignored the effect of earth wires (or shield wires). If earth wire is considered (Fig 5), part of ground fault current returns to source via metallic earth wires.

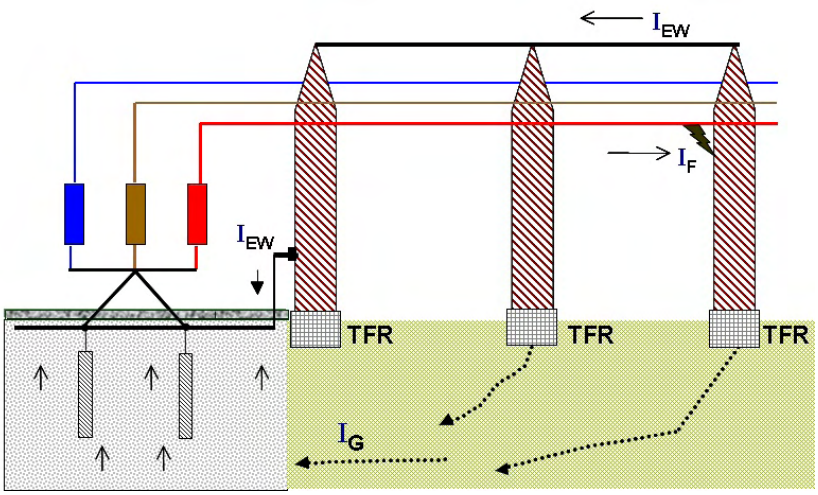

Fig 5 Effect of earth wire on transmission line

The other part that returns via earth *only* contributes to GPR. Current diverted to earth wire depends on:

(i) Number of earth wires (1 or 2)

(ii) Material of earth wire (Steel, Al)

(iii) Size of earth wire (EBB ¼, EBB 5/6, ..)

(iv) Tower footing resistance (5Ω, 10Ω,..)

It shall be ensured that the earth wire on end tower shall have a *direct metallic connection* to switchyard earth mat.

5.0 Step and Touch Potentials

Step and touch potentials refer to the potential experienced by a person standing on the surface when earth mat buried, say 750 mm, below surface has risen to GPR. Step potential is the difference in surface potentials experienced by person bridging a distance of 1 meter with his feet without contacting any other grounded object. Touch potential is the difference between GPR and the surface potential at the point where person is standing, while his hand is in contact with grounded structure. (Fig 6).

May 2005, IEEMA Journal, Page 32 to 36

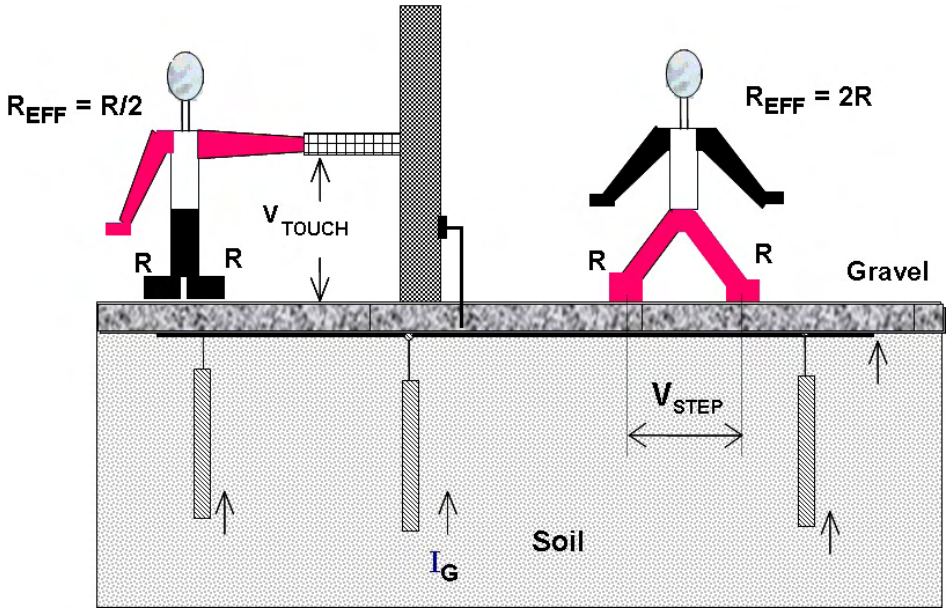

Fig 6 Touch and Step potentials

If resistance offered by each foot is R, intuitively it can be seen that for step potential the resistance offered is 2R while for touch potential it is R/2. Hence the deciding criteria for design will be touch potential as less resistance is involved. *Step potential is usually academic.*

Also another subtle difference is that the touch potential is the difference between GPR and surface potential while the step potential is the difference between two surface potentials (Fig 7).

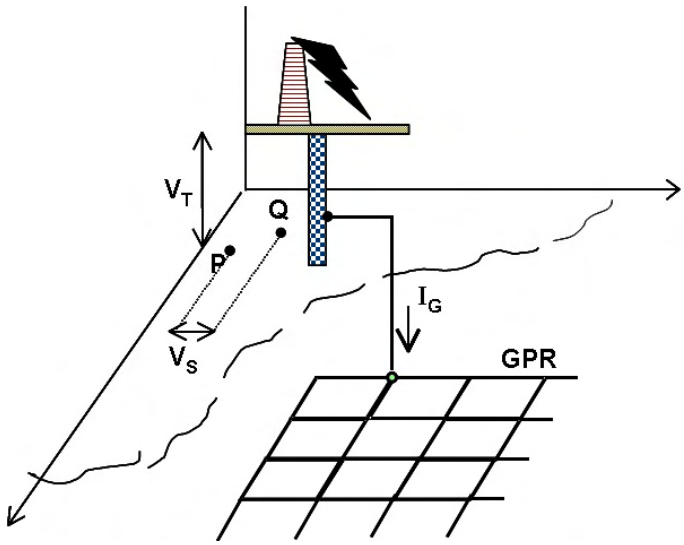

Fig 7 GPR, Touch and Step potentials

May 2005, IEEMA Journal, Page 32 to 36

6.0 Effect of thin layer of crushed rock

In outdoor switchyard, a thin layer (4" to 5") of crushed rock is spread on the surface (Fig 6). Resistivity of gravel (ρ) is 2000ΩM while that of soil is 100ΩM. Since ρ of gravel is high, only a high voltage can force the current through the body to cause injuries. The gravel acts like insulator and throws the electric field generated by GPR back to the soil.

7.0 Allowable touch and step potentials

$E_{TOUCH}^{LMT} = (R_G + 1.5 \times \rho_{SL} \times C_S)\ I_B$ ..... **(1)**

$E_{STEP}^{LMT} = (R_G + 6 \times \rho_{SL} \times C_S)\ I_B$ .....**(2)**

R_G: Body resistance, 1000Ω

ρ_{SL}: Surface layer resistivity, 2000ΩM (typical)

I_B: Permissible body current (refer section on Human element)

C_S: Reduction factor (0 to 1)

If no gravel is spread, $\rho_{SL} = \rho_{SOIL}$, $C_S = 1$

$$C = 0.09 \times \left[1 - \left(\frac{\rho_{soil}}{\rho_{SL}}\right)\right]$$

$$Cs = 1 - \left[\frac{C}{(2h + 0.09)}\right] \quad \text{..... (3)}$$

h: thickness of gravel

Example 1

For the following data, E_{TOUCH} and E_{STEP} are found.

Weight of man = 70 KG

Fault duration = 0.5 sec

ρ_{SOIL} = 100ΩM

ρ_{SL} = 2000ΩM

h = 0.1M (4")

From (3), C_S = 0.705

From Table 1, I_B = 0.222 A

From (1), E_{TOUCH}^{LMT} = 691 V

From (2), E_{STEP}^{LMT} = 2100 V

The grounding grid is designed such that design touch and step potentials are less than the above limits.

8.0 Design touch and step potentials

For the given grid geometry, the following formula are derived:

$$K_1 = \frac{D^2}{16hd}; \quad K_2 = \frac{(D+2h)^2}{Dd}$$

$$K_3 = \frac{h}{4d}; \quad K_4 = \frac{1}{\sqrt{(1+h)}}$$

$$K_5 = \frac{8}{[\pi(2n-1)]}; \quad K_6 = \frac{1}{2h}$$

$$K_7 = \frac{1}{(D+h)}; \quad K_8 = \frac{\left(1-0.5^{N-2}\right)}{D}$$

$$K_T = \left(\frac{1}{2\pi}\right)\left[ln(K_1+K_2-K_3)+K_4\,ln(K_5)\right]$$

$$K_s = \frac{1}{\pi}\ (K_6+K_7+K_8)$$

$K_I = (0.656 + 0.172\ n)$

$$E_{TOUCH}^{DSN} = \frac{(\rho I_G\ K_T\ K_I)}{(L_H + 1.15\,L_v)} \qquad \text{.....(4)}$$

$$E_{STEP}^{DSN} = \frac{(\rho I_G\ K_S\ K_I)}{(L_H + 1.15\,L_v)} \qquad \text{.....(5)}$$

Where,

D = Spacing between parallel grid conductors, M

d = Diameter of grid conductor, M

h = Depth of grounding grid, M

n = Number of parallel conductors in one direction

I_G = Current discharged into the earth, A

L_H = Total length of horizontal conductors, M

L_V = Total length of vertical rods, M

The design is acceptable if $E_{TOUCH}^{DSN} < E_{TOUCH}^{LMT}$ and $E_{STEP}^{DSN} < E_{STEP}^{LMT}$.

Example 2

To meet touch and step potential limits worked out in Example 1, following grid parameters were assumed:

I_G = 15 kA; h = 0.75 M

d = 37.5 mm (equivalent size: 75 x 10 mm)

Grid pattern is as shown in Fig 8. Only Typical conductors are shown.

Spacing: 6M

Vertical electrodes: 18 Nos, 6M long

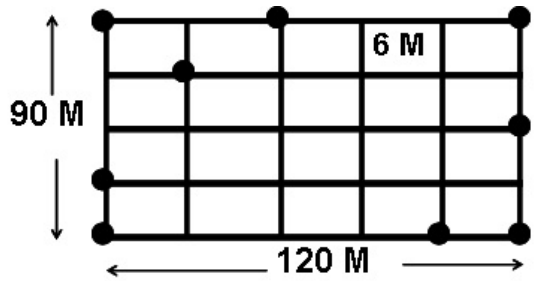

Fig 8 Grid Pattern

$L_V = 6 \times 18$

$= 108$

$$N_X = \left(\frac{120}{6}\right) + 1$$

$= 21$

$$N_Y = \left(\frac{90}{6}\right) + 1$$

$= 16$

$$N = \sqrt{N_X N_Y}$$

$= 18.3$

$L_H = (21 \times 90) + (16 \times 120)$

$= 3810M$

From Eqns (4) & (5)

$E_{TOUCH}^{DSN} = 616\ V$

$E_{STEP}^{DSN} = 453\ V$

Since the design values are within limits, the selected grid pattern is acceptable.

9.0 Influence of cross section

From Eqn (5), it is seen that *step potential is independent of diameter (cross section).* The variation of touch potential with diameter, using Eqn (4), is shown in Fig 9. For 400% increase in diameter, the reduction in touch potential is only 35%. Thus it is concluded that cross section has minor influence on touch and step potentials while the linear dimension (length) has significant impact.

May 2005, IEEMA Journal, Page 32 to 36

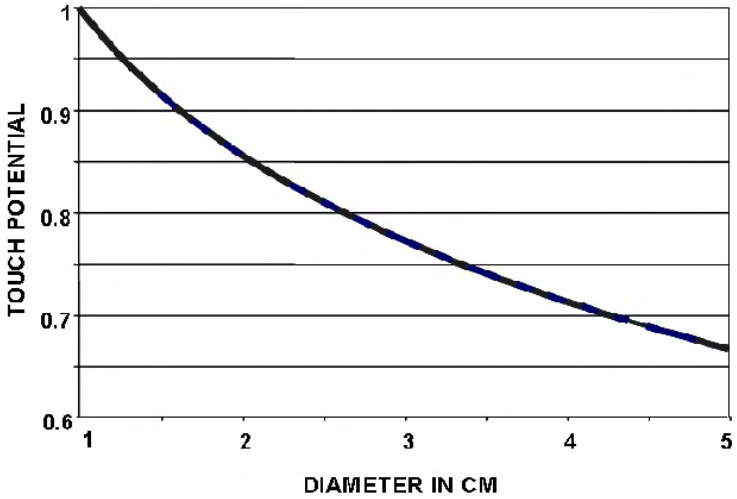

Fig 9 Touch Voltage vs Conductor Size

10.0 Earthing in LV system

For easy conceptualization single phase network is considered. Three case studies are discussed to bring out the points.

10.1 Case 1: Source grounded, equipment ungrounded

The source is grounded through electrode at E_1 (Fig 10).

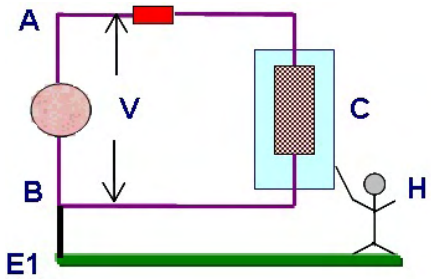

Fig 10 Source grounded Equipment ungrounded

Let resistance of electrode be 1Ω. The equivalent circuit is shown in Fig 11.

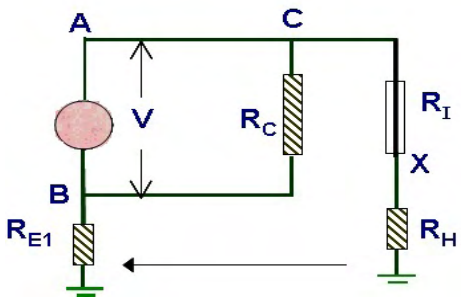

Fig 11 Equivalent Circuit

In the figure, R_C: Equipment load resistance (e.g. 230^2 / 1000 = 53 Ω, for 1kW load)

R_I : Equipment insulation resistance

R_H : Human body resistance, say 2kΩ

Under normal healthy conditions, R_I is very high (MΩ). Even if the equipment surface is touched, current through the person is negligible.

Under insulation failure conditions, R_I is zero. Current through the person when he touches the surface of equipment is:

$$I_H = \frac{V}{(R_H + R_{E1})}$$

$$= \frac{240}{(2000+1)}$$

$$\cong 120\ mA$$

This current is too small for the fuse to operate. But even this small current is high enough to cause injury to a person (the limit is 116mA for 1 sec for 50Kg man– refer Table 1).

10.2 Case 2: Source grounded, equipment grounded

The source and equipment are grounded through electrodes at E_1 and E_2 (Fig 12).

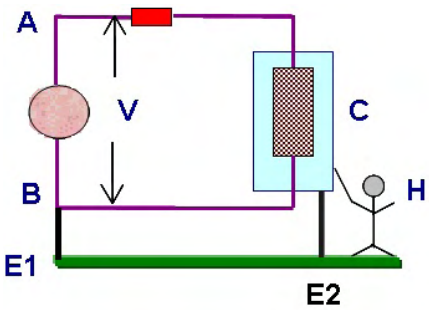

Fig 12 Source grounded Equipment grounded

The equivalent circuit is shown in Fig 13.

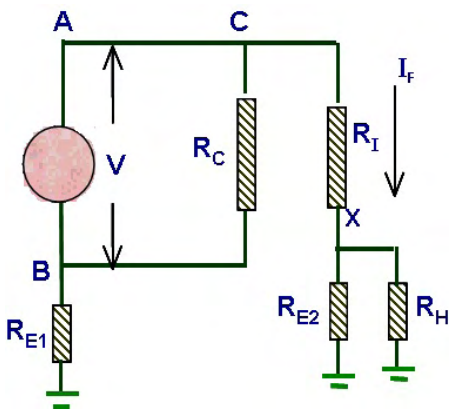

Fig 13 Equivalent Circuit

The fault current with R_I= 0 is given by,

$$I_F = \frac{240}{(1+1)}$$
$$\cong 120\ A$$

The current through person is:

$$I_H = \left[\frac{1}{(1+2000)}\right] x120$$
$$= 60\ mA$$

The fault current I_F is significant but not high enough and the fuse may or may not trip in desired time. The current through body is less but may still cause injuries.

10.3 Case 3*:* Source grounded, equipment grounded with bonding conductor (Fig 14).

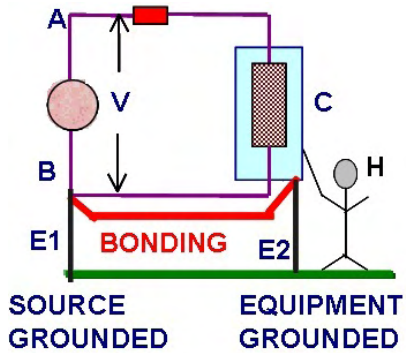

Fig 14 Bonding conductor

The equivalent circuit is shown in Fig 15. It is same as Case 2 but with bonding conductor running between equipment and source. Bonding establishes physical metallic connection between equipment and source. The resistance of bonding conductor R_B is small. Even assuming R_B = 0.01Ω , fault current,

$$I_F = \frac{240}{0.01}$$
$$= 24\ kA$$

Since substantial fault current flows, fuse blows instantaneously and human safety is inherently achieved.

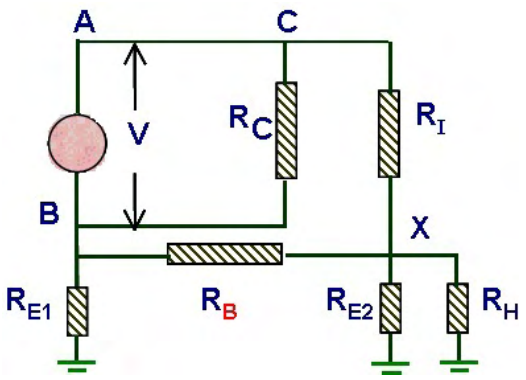

Fig 15 Equivalent Circuit

The above case studies illustrate an important concept that in LV (and also MV) systems, for getting the fault current back to the source, 'mother earth' should not be dependent upon. The fault current shall be carried back to the source through metallic connection (say 65 x 10mm strip). Since no current is injected into the earth, touch and step potentials are irrelevant in these cases.

11.0 Earthing in TPN system

Majority of problems in ground fault relaying could be due to unsound earthing practices. The correct method is shown in Fig 16. The connection shown in Fig 17 is wrong.

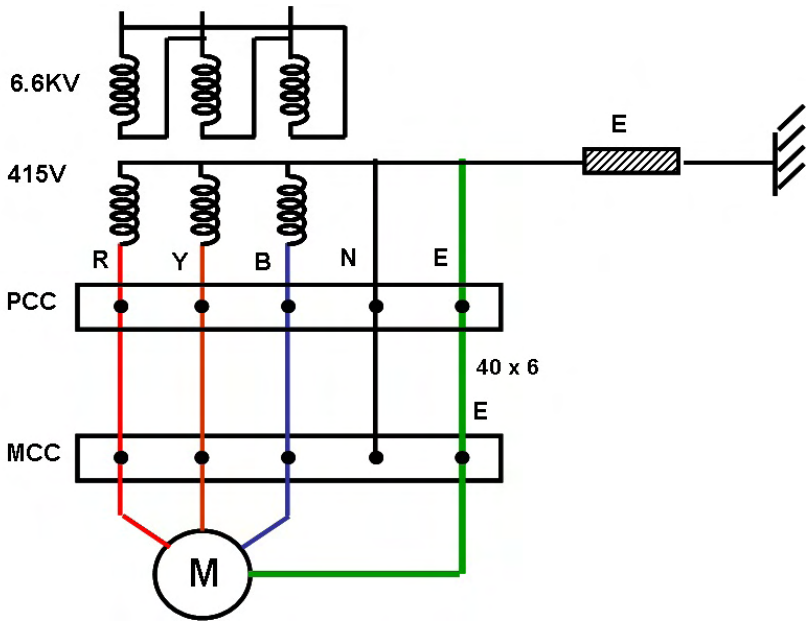

Fig 16 Correct Method

May 2005, IEEMA Journal, Page 32 to 36

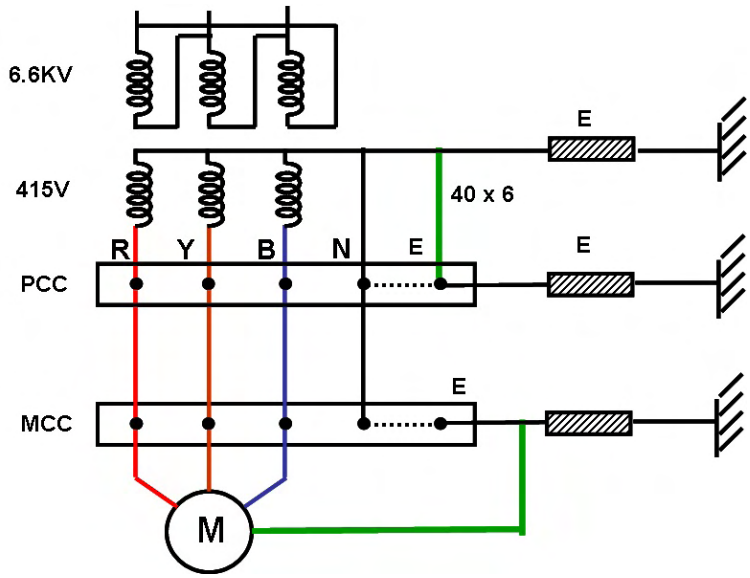

Fig 17 Wrong Method

The basic premise is that neutral must carry only (steady state) unbalance current whilst the earthing conductor shall carry only ground fault current. *Neutral and earthing conductor shall not be interconnected at any place except at service entrance* (neutral of feeding transformer). Consider three LT switchgears A, B and C with A feeding B and B feeding C. Metallic earthing conductor must run between C to B, B to A and A to service neutral. For this reason, in literature it is sometimes referred as 'earth *continuity* conductor'.

12.0 Earthing in MV resistance grounded system

Here also the earthing conductor must run all over the concerned area. This is to ensure that fault current returns to NGR only through a metallic path (Fig 18). Touch and step potentials are irrelevant in this case also.

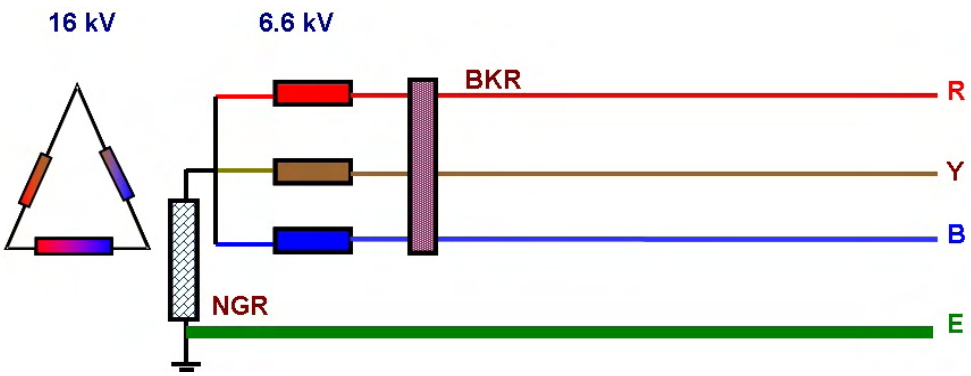

Fig 18 Earthing in MV System

May 2005, IEEMA Journal, Page 32 to 36

13.0 Earthing in MV ungrounded system

At first it looks strange to talk of earthing conductor in ungrounded system. Two motor feeders fed by ungrounded system are shown in Fig 19.

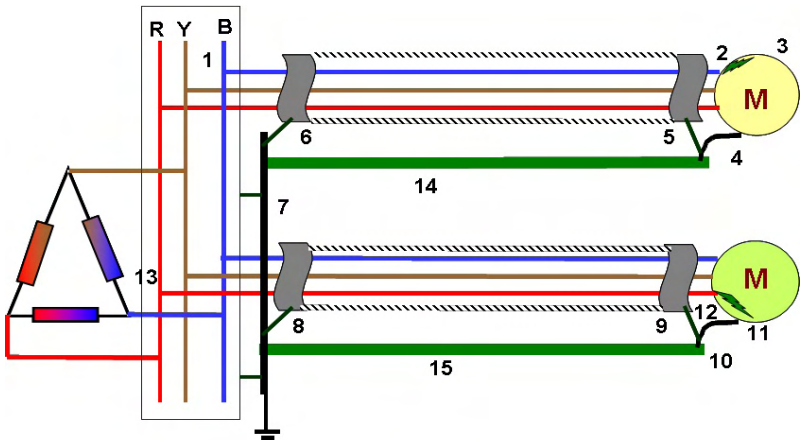

Fig 19 Earthing in Ungrounded System

Of course for one ground fault, no current flows. Assume two ground faults, on Phase R in one motor and on Phase B in another motor. Under ideal conditions it must lead to flow of large phase to phase fault current to be sensed by over current relays. Without earthing conductor, the path taken will be (through cable armour) from (1) to (13) creating a phase to phase short circuit.

If the armour can not sustain the flow of fault current, it will be damaged. If the cable does not have armour, even phase to phase fault current will not flow! On the other hand if earth continuity conductor is provided, the path taken will be [1 to 4, 14, 7, 15, 10 to 13]. This facilitates flow of fault current without impediment that improves relaying performance.

14.0 Conclusion

The basic factors that influence EHV switchyard earth mat designs were discussed. The underlying concepts of GPR, touch and step potentials were explained with examples. The cross section of conductor has minor impact on touch and step potentials while the length has significant impact.

Regarding LV and MV systems, the fundamental axiom is: 'Get the fault current back to the source through metallic conductor and not through mother earth'. This will mitigate some of the ground over current relaying problems experienced at site.

The materials presented in Parts 1&2 of the paper can be gainfully employed by the practicing engineer to critically look at existing design practices.

May 2005, IEEMA Journal, Page 32 to 36

15.0 References

[1] IEEE Std 80 - 2000: Guide for safety in AC substation grounding.

[2] IS 3043: Code of practice for earthing.

[3] Earthing principles and practices: R W Ryder.

[4] Electrical earthing and accident prevention: edited by M G Say.

Comments from Scrutineers' and Author's Replies

1.0 Scrutineers' Comment

Is Delta – Delta type transformer connection permitted in practice? If there is such a connection, is it not desirable to have 'fictitious neutral' created by earthing transformer or resistances.

Author's Reply

Delta – Delta connection is very rarely used in utility and industrial systems. Obviously special means to earth ungrounded systems are called for. For detailed discussions, J&P transformer hand book can be referred.

2.0 Scrutineers' Comment

Is it not true that the touch potential hazard becomes cognizable when the metallic enclosure is not solidly earthed or the earth connection is broken or when there is severe unbalance in three phase currents?

Author's Reply

The enclosed Fig A explains the concept. Unbalance current flows through neutral conductor and does not pose hazard as long as neutral conductor is sized properly.

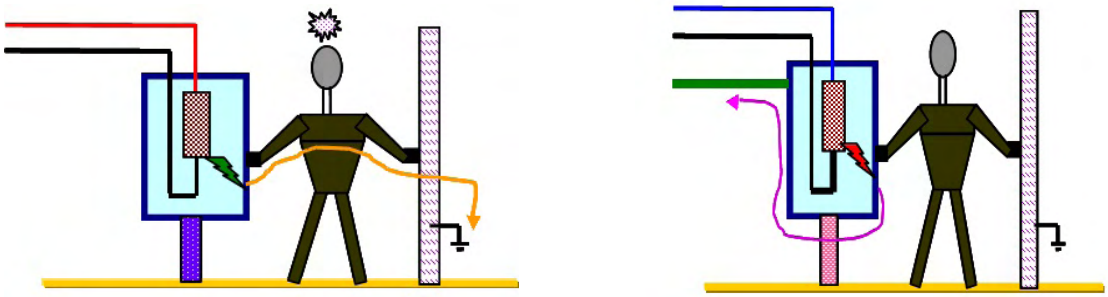

Fig A

Unsafe Earthing:
No Earth continuity Conductor

Safe Earthing:
With Earth continuity Conductor

May 2005, IEEMA Journal, Page 32 to 36

3.0 Scrutineers' Comment

Is residual current relay a reliable 'touch shock' protection?

Author's Reply

Earth leakage circuit breakers that are set to trip typically around 30mA offer reasonable protection.

4.0 Scrutineers' Comment

The fault current assumed in the example is extremely low (15kA). Even in LV circuits the HRC fuses cater to currents of 35 kA.

Author's Reply

Magnitude of fault current is in the range of 10kA to 40kA from 415V to 400kV systems. It depends on the size of equipment (generator or transformer) at that voltage level. The value of 15kA assumed in the example is the current discharged to earth which could be much less than the fault current as explained in the article.

5.0 Scrutineers' Comment

I request the author to reconsider his remark touch potential is academic. The shock and reaction of 4 legged animals due to step potential is a near sure indication of lightning surge. Step potential hazard is very high and can literally kill a person.

Author's Reply

The exact opposite is stated in the paper step potential is academic. Since allowable touch potential is much less than allowable step potential, Earthing grid designed for touch potential usually satisfies step potential. All calculations are done for humans as per standards.

6.0 Scrutineers' Comment

In dealing with LV systems, the calculations are flawed in one respect viz calculations of 'R' – equipment resistance and its use in calculating fault currents. Under fault conditions the source is represented as a voltage source with internal impedance as reflected on the terminals. The bus capacity is assumed infinite. It

may be desirable to analyze the earthing requirements on this basis. Can the authors react?

Author's Reply

Compared to the body resistance (2,000 Ω to 10,000 Ω) the source impedance is not significant. Also, exclusion of source impedance results in more conservative results (increased current).

May 2005, IEEMA Journal, Page 32 to 36

ieema journal

Restricted Earth Fault Protection Practices

Dr K Rajamani,

Reliance Infrastructure Ltd., MUMBAI

(January 2006, IEEMA Journal, Page 92 to 95)

ieema journal

Restricted Earth Fault Protection Practices

Dr K Rajamani, Reliance Infrastructure Ltd.,Mumbai

1.0 Introduction

Restricted Earth Fault (REF) protection is a sensitive protection applied to protect star winding of transformer or generator. In this article, application of REF to LV and MV systems is explained. Four CT and five CT schemes for LV system are covered. Requirement of IPCT for current matching in MV system is brought out. The article ends with testing procedures for ensuring stability and sensitivity of REF scheme at site.

2.0 REF vs Differential

(i) REF compares summated line current against neutral current on the same side of the object. Differential compares line currents on one side of object against line currents on the other side of the object (Fig 1).

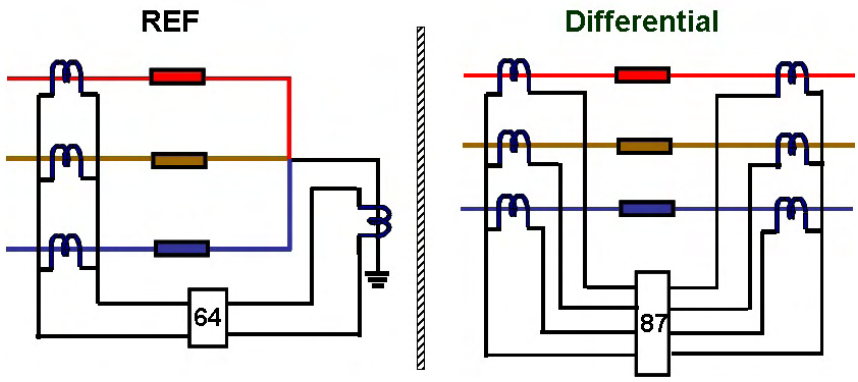

Fig 1 REF vs Differential

(ii) In REF, IPCT (Interposing CT) is required for matching current magnitude only. In differential, IPCT is required for matching both current magnitude and phase angle if required (Fig 2).

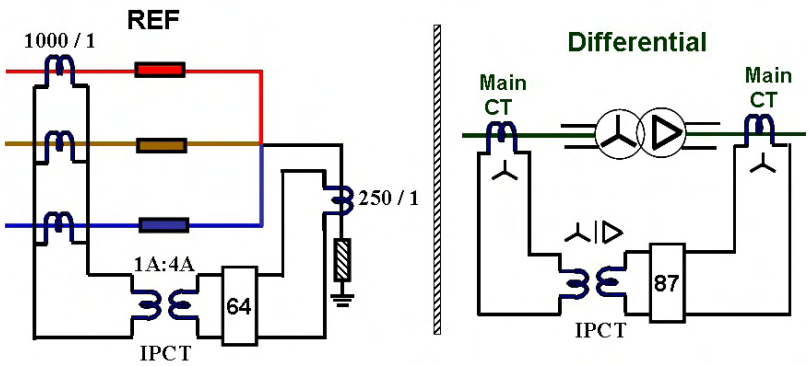

Fig 2 REF vs Differential

January 2006, IEEMA Journal, Page 92 to 95

(iii) Differential responds to both phase –phase fault and ground fault within the protected zone. REF responds to only ground fault within the protected zone.

(iv) The CT secondary current flow for ground fault is shown in Fig 3. For external fault, the current circulates between Line CT (LCT) and Neutral CT (NCT) and no current flows through relay coil. For internal fault, only NCT sees the current but not the LCT. The current from NCT is forced into the relay coil as LCT presents open circuit.

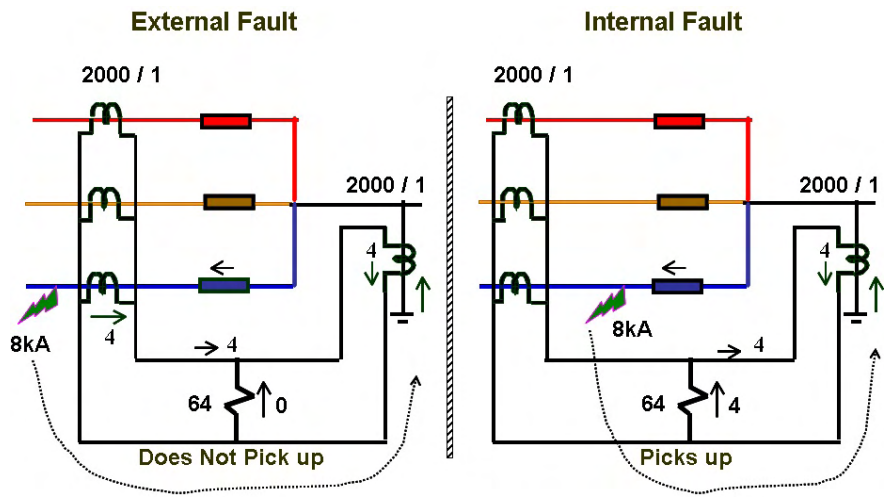

Fig 3 Response to Ground Fault

(v) The current flow for phase-phase fault is shown in Fig 4. In case of external fault, the secondary current circulates between two LCTs. Both LCT and NCT do not see the current for internal fault. Thus REF does not respond to phase-phase fault either within the protected zone or outside the protected zone.

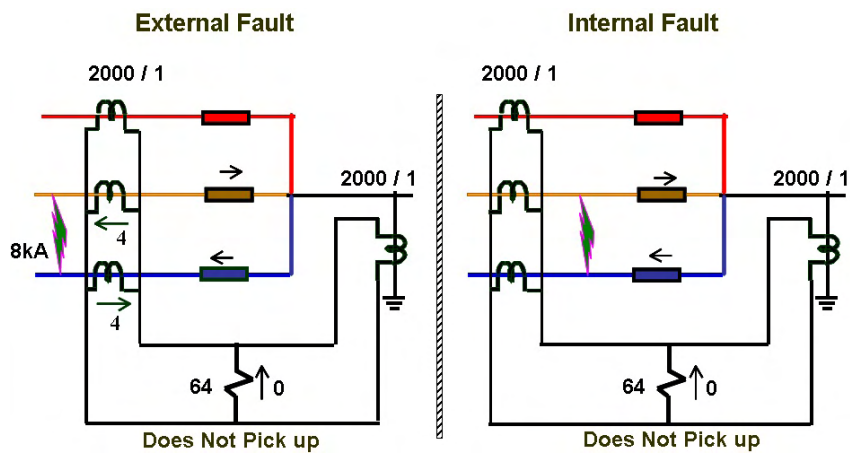

Fig 4 Response to Phase-Phase Fault

(vi) For comparison of sensitivity of REF and Differential schemes, refer [1]

3.0 REF for LV System

Restricted Earth Fault protection is not too popular in LV system for the following reasons:

(i) LV systems are solidly grounded. The earth fault currents are large even if the fault occurs very near to the neutral of the object on star side [1]. Sensitive earth fault protection is easily obtained by providing standby earth fault relay (51SN) connected to CT on neutral (Fig 5). To provide REF protection, extra set of line and neutral CTs of special class are required in addition to the relay itself. The extra cost is not justified for majority of LV systems.

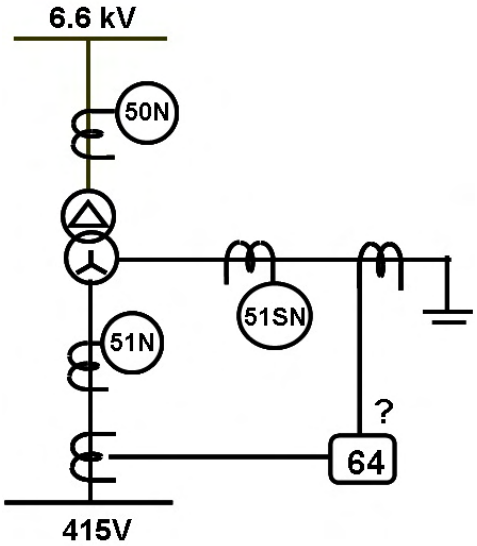

Fig 5 Earth Fault Relays

(ii) Unless proper care is taken during design stage itself, REF scheme for TPN (Three phase + Neutral) system can malfunction and through fault stability can be poor.

However there are entities which have standardized on REF protection for LV system. Also some local authorities insist on provision of REF protection for LV generators. A brief analysis on problems and available solutions when applying REF to LV system follows.

3.1 NCT Located After Bifurcation

The neutral current is *not* accounted for in REF scheme shown in Fig 6. Two cases arise:

(i) Due to large unbalance in loading condition, neutral current can be high. If the setting is low, REF may pick up. This is wrong as there is no genuine ground fault.

(ii) A cardinal principle of system design is that neutral conductor must carry only unbalanced load current and earth conductor (e.g. 25 x 3 mm GI) must carry returning ground fault current [2]. If this is violated, for an external ground fault, the neutral may carry the returning ground fault current, leading to inadvertent REF pick up.

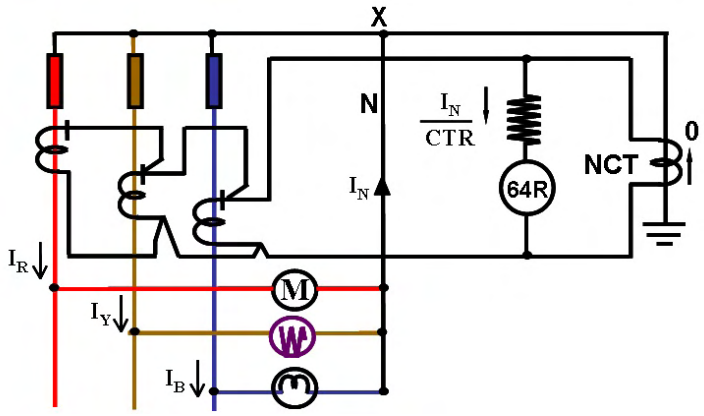

Fig 6 NCT Location – After Bifurcation

3.2 NCT Located Before Bifurcation

To obviate the deficiencies mentioned above, NCT is mounted before bifurcation (Fig 7). The neutral current flows through NCT and balances against summated line current and REF will not pick up. But mounting of NCT as shown in Fig 7 may not be feasible sometimes due to constructional difficulties.

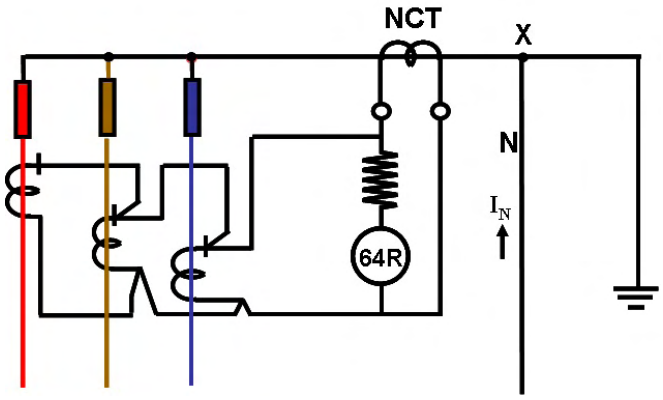

Fig 7 NCT Location – Before Bifurcation

3.3 REF with 5CTs

This is a straight-forward implementation in TPN system but requires extra CT (Fig 8). The neutral current flow is accounted for in REF scheme.

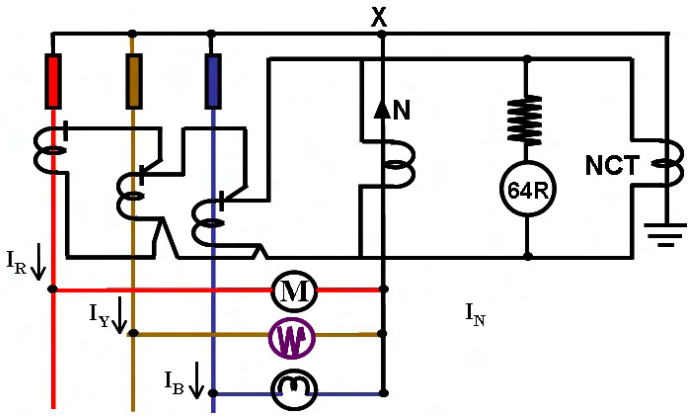

Fig 8 REF with 5 CTs

4.0 REF for MV System

In low resistance grounded system the ground fault current is limited to about 100 - 400A. In this case the LCT ratio will be much higher corresponding to rated load current. The NCT ratio is chosen lower corresponding to restricted ground fault current to improve sensitivity. Since LCTs and NCT are not of same ratio, Interposing CT (IPCT) is required for current matching. If LCT ratio is 1000/1 and NCT ratio is 250/1, 1:4 IPCT is required to balance the current on both sides. The current distributions for external and internal faults are shown in Fig 9. In case of internal fault, LCT does not carry fault current and presents open circuit to IPCT.

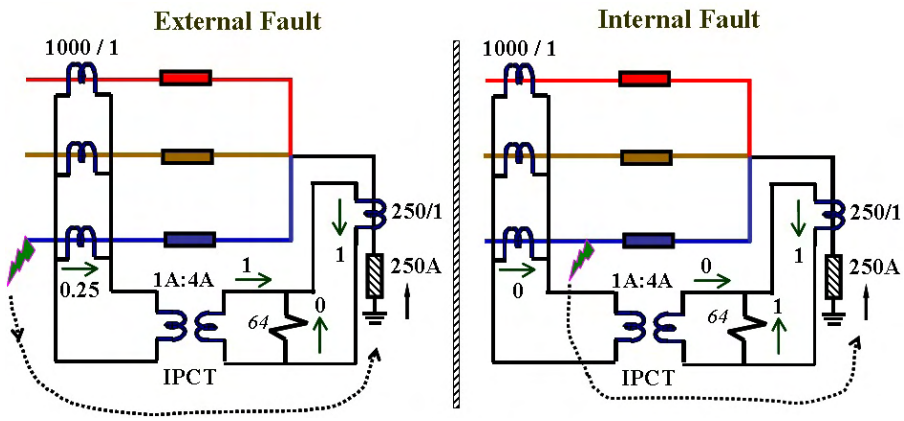

Fig 9 REF with IPCT

4.1 Relay location vs Sensitivity

The relay (64) can be located on either side of IPCT (Fig 10). Assume the relay set current I_{SET} = 0.2A.

If the relay is located towards NCT, I_{RELAY} = 1A = 5 I_{SET}.

If the relay is located towards phase CT, I_{RELAY} = 0.25A = 1.25 I_{SET}.

Thus the relay sensitivity is much higher if it is connected towards NCT and is the preferred location.

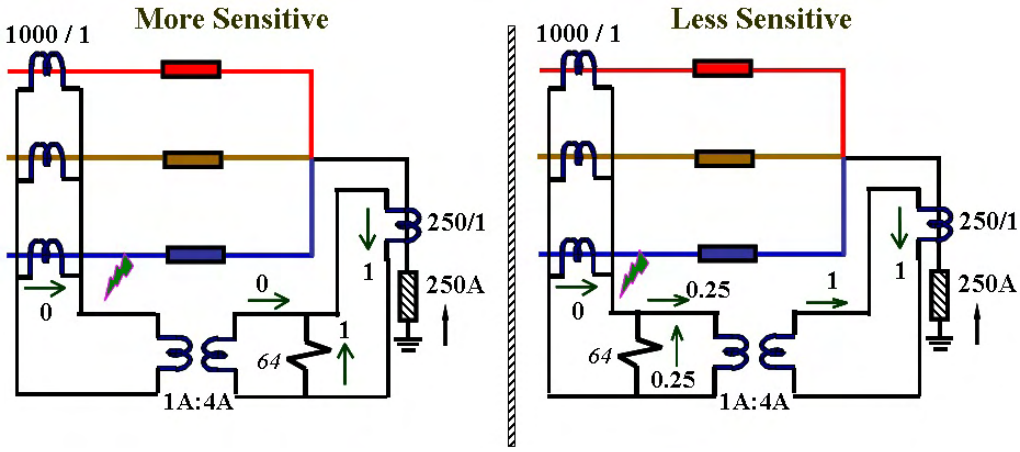

Fig 10 Relay Location vs Sensitivity

5.0 REF Scheme Testing

Some times the malfunctioning of scheme is noticed during:

(i) Faults external to the protection zone

(ii) Switching in a transformer

(iii) Switching in a big motor

The causes of mal-operation are:

(i) Wrong CT polarity (P1, P2, S1, S2 – wrong markings)

(ii) Loose connection

(iii) Wrong CT secondary wiring

(iv) CT saturation (wrong KPV specification)

(v) Absence or wrong IPCT ratio (in case of low resistance grounded MV system)

(vi) Improper relay setting vis a vis the CT characteristics (I_E)

(vii) Improper value of stabilizing resistor

(viii) Faulty relay

The purpose of testing is to ensure:

(i) Sensitivity of the scheme for internal zone ground faults (operate)

(ii) Stability of the scheme against internal zone phase faults (not operate)

(iii) Stability of the scheme against external zone ground and phase faults (not operate)

5.1 Outline of Procedure

The following broad steps cover testing of scheme used for transformer:

(i) Disconnect the transformer from both the sides

(ii) Bypass NGR if present

(iii) Create internal and external zone faults on star side

(iv) Apply three phase test voltage to the other side of transformer

(v) Measure during various faults simulated –

(a) CT Primary and secondary currents

(b) Current through REF relay

6.0 Case study

Consider the transformer with parameters: 20MVA, 33kV/11kV, Delta – Star, Z = 12%

$$I_S^{RAT} = \frac{20000}{\left(\sqrt{3}x11\right)}$$

$$= 1050\ A$$

With the secondary shorted, primary voltage required to circulate rated current is 3960V (33000 x 0.12). If 415V is applied to primary side with secondary shorted (Fig 11),

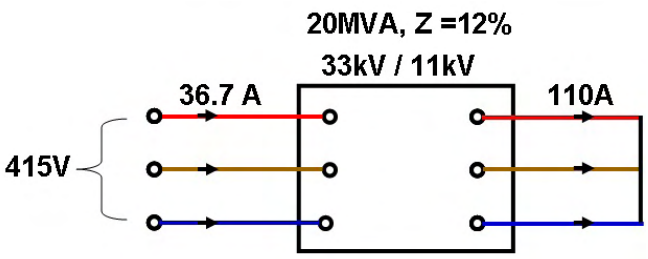

Fig 11 Three Phase Short Circuit

$$I_3^{FLT} = I_S = 1050x\left(\frac{415}{3960}\right)$$

$$= 110A$$

$$I_P = 110x\left(\frac{11}{33}\right)$$

$$= 36.7A$$

In case of three phase fault, $I_3^{FLT} = \frac{1}{Z}\ pu$

6.1 Line to ground fault

In case of unsymmetrical line to ground short circuit, from theory of symmetrical components [3],

$$I_{LG}^{FLT} = \frac{3}{(Z_1 + Z_2 + Z_0)} pu$$

$$Z_1 = Z_2 = Z_0 = Z$$

$$I_{LG}^{FLT} = I_S = \frac{3}{(3Z)}$$

$$= 1.0\ I_3^{FLT}$$

$$= 110A$$

Line to ground fault on star side gets reflected as line to line fault on delta side [4].

$$Turns\ Ratio = \frac{33}{(11/\sqrt{3})}$$

$$= 5.2$$

$$I_P = \frac{110}{5.2}$$

$$= 21.2A$$

The current distribution is shown in Fig 12.

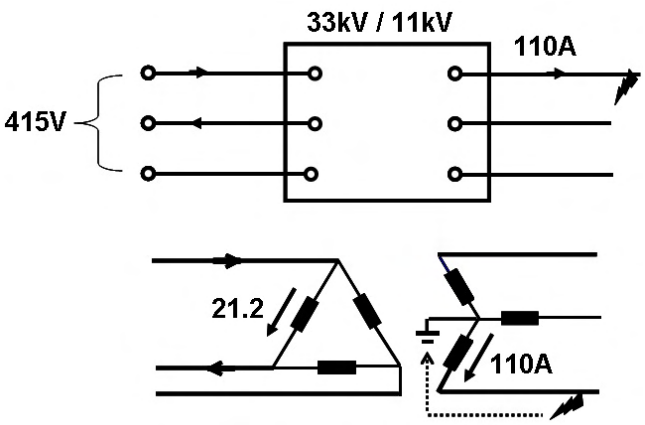

Fig 12 Line to Ground Fault

6.2 Line to Line fault

In case of line to line fault, from [3],

$I_{LL}^{FLT} = 0.866 \times I_3^{FLT}$

$= 0.866 \times 110$

$= 95.3A$

The current distribution is shown in Fig 13.

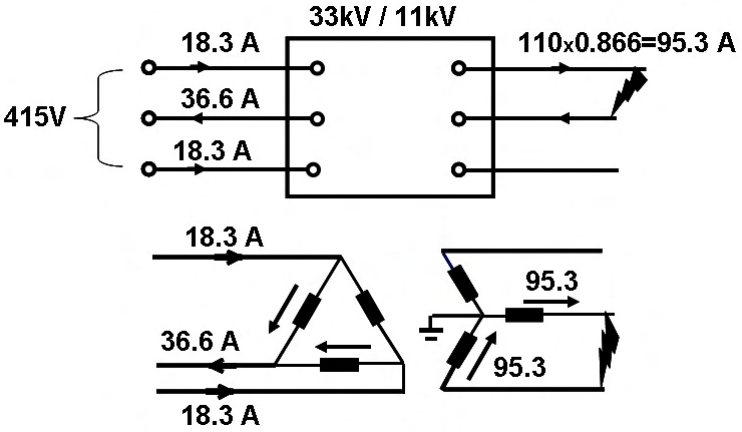

Fig 13 Line to Line Fault

6.3 External Fault Simulation

(i) Short temporarily stabilizing resistor in relay circuit if provided

(ii) Connect R phase to ground (Fig 14)

(iii) Apply 415V on delta side of transformer

(iv) Measure the current through CT secondaries and REF relay

(v) Stability is ensured if current through relay is nearly zero

(vi) Repeat the study for Y phase and B phase

(vii) Remove phase to ground earthing

(viii) Create (R –Y) short circuit (Fig 15)

(ix) Stability is ensured if current through relay is nearly zero

(x) Repeat the study for (Y –B) and (B –R) short circuit

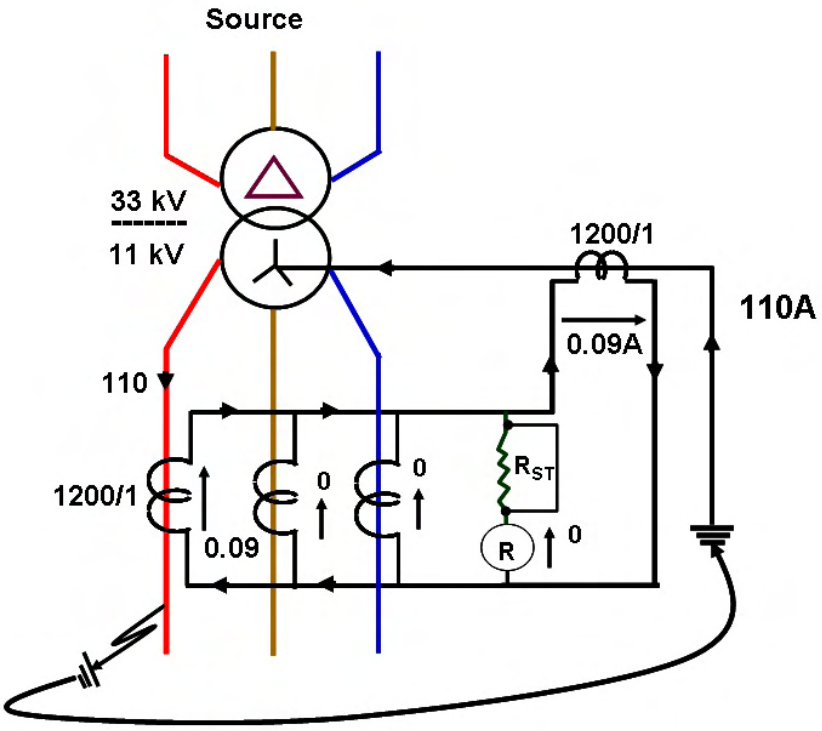

Fig 14 External Ground Fault

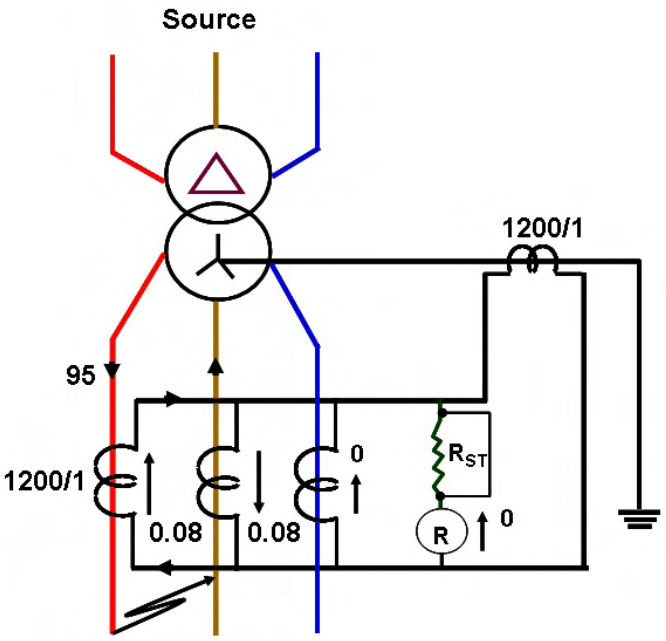

Fig 15 External Phase Fault

The current distribution shall be as per Table 1.

Table 1: External fault simulation						
Sr.No	**Fault**	I_{CT-R}	I_{CT-Y}	I_{CT-B}	I_{CT-N}	I_{RELAY}
1	R - E	0.09	0	0	0.09	0
2	Y - E	0	0.09	0	0.09	0
3	B - E	0	0	0.09	0.09	0
4	R - Y	0.08	0.08	0	0	0
5	Y - B	0	0.08	0.08	0	0
6	B - R	0.08	0	0.08	0	0

6.4 Internal Fault Simulation

Repeat the above studies by shifting the fault point to within zone of protection (Fig 16 and Fig 17). Sensitivity is ensured if current through relay is maximum for ground fault. For phase – phase fault the current through relay shall be nearly zero.

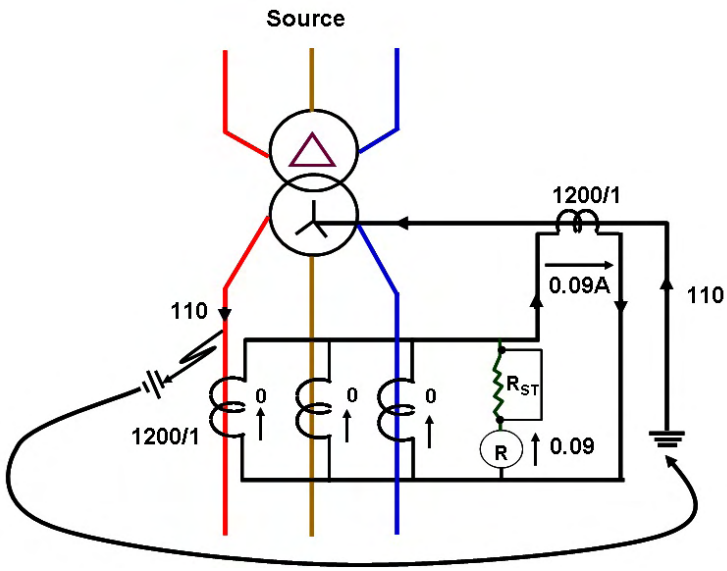

Fig 16 Internal Ground Fault

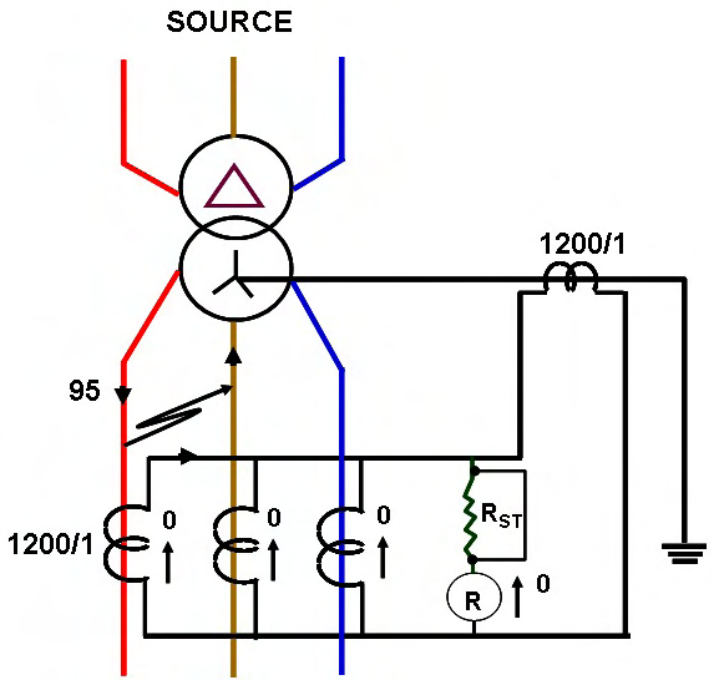

Fig 17 Internal Phase Fault

The current distribution shall be as per Table 2.

Table 2: Internal fault simulation						
Sr.No	**Fault**	I_{CT-R}	I_{CT-Y}	I_{CT-B}	I_{CT-N}	I_{RELAY}
1	R - E	0	0	0	0.09	0.09
2	Y - E	0	0	0	0.09	0.09
3	B - E	0	0	0	0.09	0.09
4	R - Y	0	0	0	0	0
5	Y - B	0	0	0	0	0
6	B - R	0	0	0	0	0

The scheme is certified acceptable if following are observed:

Table 3		
	Relay picks up for phase to earth fault	Relay picks up for phase to phase fault
External	No	No
Internal	Yes	No

7.0 Conclusion

REF is one of the important unit protections available. In many sites REF schemes are disabled since perceived mal-operation has been observed. It could be either due to wrong design or wrong engineering not detected due to inadequate testing. The ideas presented here give the road map to the practicing engineer to successfully commission REF schemes ensuring stability and sensitivity.

8.0 References

[1] "Sensitivity comparison of differential, REF and over-current protections", K Rajamani, IEEMA Journal, Oct 2002, pp 28 – 33

[2] "Earthing of electrical system – Part 2", K Rajamani, IEEMA Journal, May 2005, pp 32 – 36.

[3] Symmetrical components for power system engineering : J Lewis Blackburn, Marcel Dekker Pub.

[4] "Peculiarities of delta connection in electrical power systems', K Rajamani, IEEMA Journal, Dec 2003, pp 38 – 42.

ieema journal

Realistic Specification for Current Transformer

Dr K Rajamani and Bina Mitra,

Reliance Infrastructure Ltd., MUMBAI

(January 2006, TECH-IT 2006 Seminar, IEEMA, Mumbai, Page I-22 to I-28)

Realistic Specification for Current Transformer

Dr K Rajamani and Bina Mitra, Reliance Infrastructure Ltd., Mumbai

1.0 Introduction

Current transformers (CT), though may appear quiet insignificant in the huge electrical power network, play a vital role in protection and metering systems. The key elements in a protection system (Refer Fig.1) are:

(i) Instrument transformers (Current and voltage transformers) – sensors in the system.

(ii) Protective relays – locating and initiating isolation of faults in the system.

(iii) Circuit breaker – isolating faults from the system.

(iv) AC and DC wiring related to the above elements.

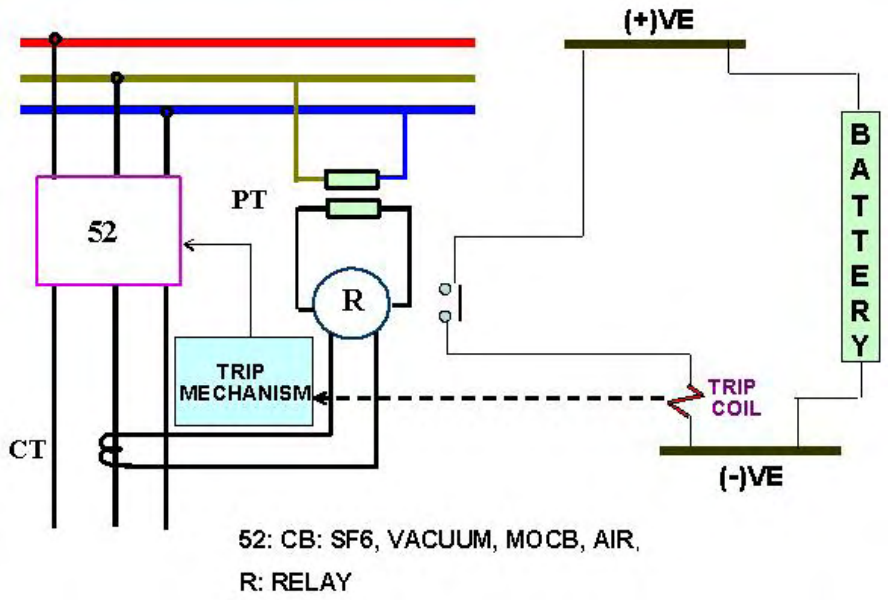

Fig 1 Protection System

Faults in the system can be cleared successfully when all the above elements of protection chain work perfectly. The success of fault clearance, irrespective of use of 'advanced numerical relays' and 'VCBs' is still critically dependent on faithful reproduction of primary quantities on secondary side by instrument transformers. This paper discusses realistic specification of current transformer in particular to achieve the above objective. Initially few basic concepts which play a vital role in specifying current transformer parameters are explained.

1.1 Equivalent circuit of current transformer

Refer Fig. 2 for equivalent circuit of current transformer.

E_S = Secondary induced EMF

V_S = Secondary output voltage

January 2006, TECH-IT 2006 Seminar, IEEMA, Mumbai, Page I-22 to I-28

I_P = Primary current

I_S = Secondary current

I_E = Exciting current

Ic = Core loss component

I_M = Magnetising component

Primary connected to current source

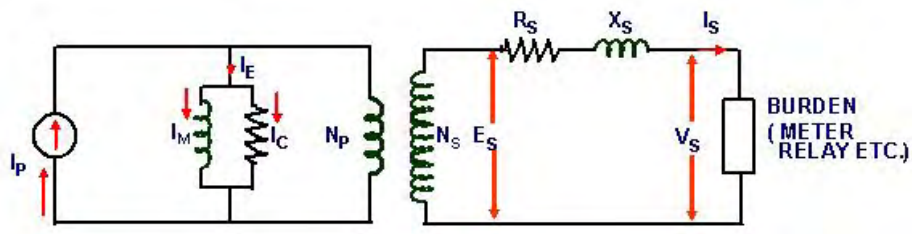

Fig 2 Equivalent Circuit of Current Transformer

1.2 Phasor diagram of current transformer

Refer Fig. 3 for phasor diagram of current transformer.

φ : Flux

I_SR_S : Secondary resistance voltage drop

I_SX_S : Secondary reactance voltage drop

$I_P N_P$: Total primary ampere turns.

I_CN_p : Component of primary ampere turns required to supply core losses (usually very small)

$I_M N_P$: Component of primary ampere turns required to produce the flux.

I_SN_S : Secondary Ampere Turns.

$I_P' N_P$: Component of primary Ampere Turns required to neutralize secondary Ampere Turns; opposite to I_SN_S.

For bar primary, N_P =1

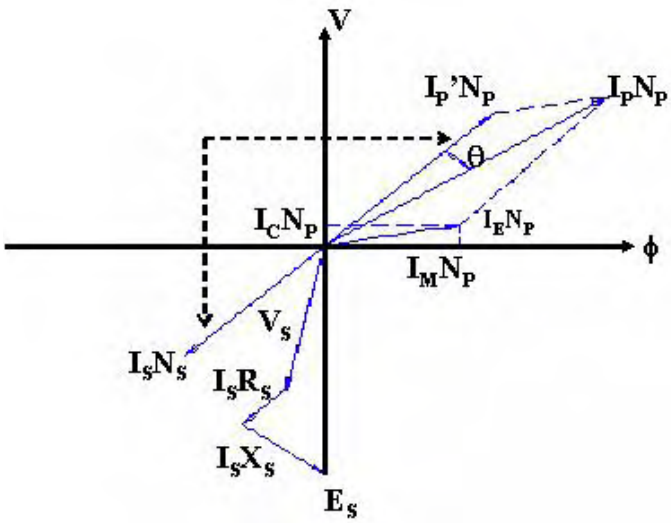

Fig 3 Phasor Diagram of Current Transformer

As seen from the phasor diagram, the primary current I_P is made up of two components:

(i) Exciting current I_E - magnetizes the core and supplies the core losses.

(ii) Reflected secondary current - I_P'.

The errors in current transformation are due to the exciting current. The proportionality between primary current and secondary current is not strictly maintained and results in magnitude (ratio) and phase angle errors.

1.3 CT saturation

When a CT is saturated, the tight linear relationship between primary and secondary is lost and the CT is unable to replicate faithfully. Under healthy conditions very little current is used for excitation and majority of the primary current is transformed into secondary (Refer Fig.4).

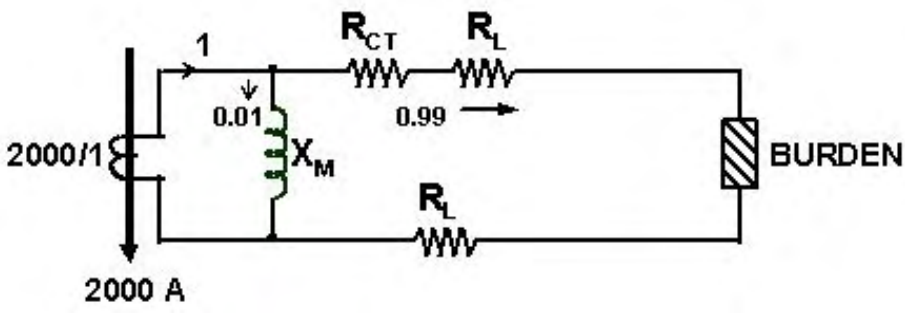

Fig 4 Healthy Current Transformer

However, under saturation conditions, majority of the primary current is used in exciting the core and very little is transformed into secondary current which flows in the burden (Refer Fig 5).

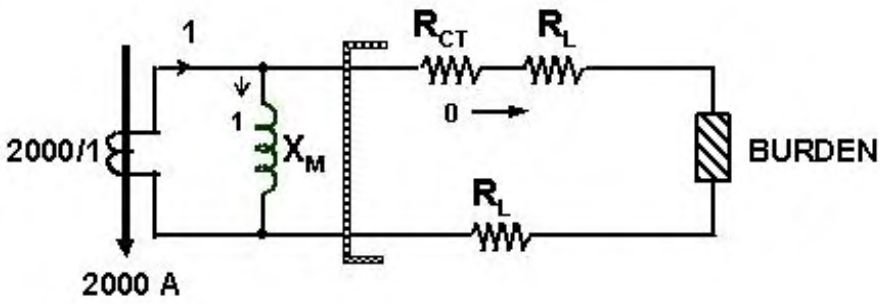

Fig 5 Saturated Current Transformer

The CT excitation characteristic linearity is maintained up to knee point voltage (Vk) (defined later) (Refer .Fig.6). Beyond knee point voltage, current transformer starts saturating.

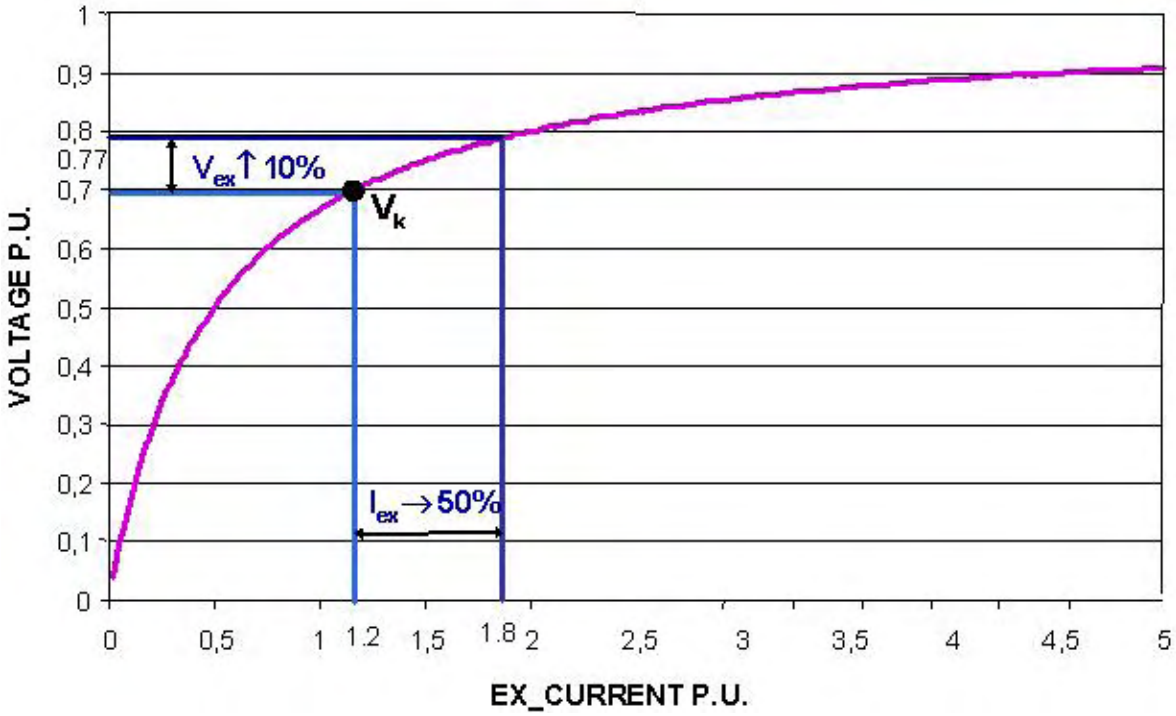

Fig 6 CT Excitation Characteristic

1.4 Voltage developed across CT secondary

Another important function of a current transformer is to develop enough voltage to drive required current through circuit burden in addition to faithfully reproducing the primary current. In case of CT saturation, since major portion of primary current is used in exciting the core, the CT is unable to develop enough voltage across CT secondary to drive the required current through the connected burden. This concept plays an important role in specifying parameters for both general protection class and special protection class CTs.

2.0 Current Transformer Classification

Current transformers may be classified in the following categories based on the application:

(i) General protection class used for protective relaying.

(ii) Special protection class (Class PS) used in current balance protection schemes.

(iii) Metering class used in metering circuits.

3.0 Parameters For Current Transfomer Specification

The key parameters required for complete current transformer specification:

(i) C.T. Ratio

(ii) Number of cores

3.1 Parameters based on application of current transformer

3.1.1 General protection class

(i) Accuracy class

(ii) Accuracy limit factor (A.L.F)

(iii) Rated burden

3.1.2 Special protection class

(i) Knee point voltage (Vk)

(ii) Exciting current (Iex)

(iii) Secondary winding resistance (Rct)

3.1.3 Metering class

(i) Accuracy class

(ii) Instrument security factor (I.S.F)

(iii) Rated burden

4.0 CT Ratio

CT ratio is defined as the ratio of rated primary current to the rated secondary current.

4.1 Rated primary current

Factors influencing rated primary current:

(i) Rating based on continuous thermal rating

I_A: Maximum load current (mandatory) + 20% overload capacity.

(ii) Rating based on short time thermal rating

I_B: Rated short time current for 1 sec / 150

The higher current of the above two values (I_A, I_B) decides primary current rating. This ensures robust construction of the current transformer.

Short circuit current through the current transformer can be maximum 150 times the rated CT current for 1 sec. Based on I^2t criteria, in case fault current (I_F) is larger than 150 times the rated primary current, then short circuit withstand time will be less than 't' seconds,

$$t = \frac{150^2 \; I_P^{\,2}}{I_F^{\,2}}$$

The fault shall be cleared within ' t ' seconds to avoid CT damage.

Eg: CT Ratio = 200 / 1

Fault Current I_F = 40kA

Short Circuit withstand time, $t = \dfrac{150^2 \; x \; 200^2}{40000^2}$

$= 0.57 \; sec$

January 2006, TECH-IT 2006 Seminar, IEEMA, Mumbai, Page I-22 to I-28

The fault shall be cleared within 0.6 sec to avoid damage of current transformer.

A special mention is required for CTs used for equipment of small rating connected to high voltage and high short circuit level networks. In such networks low ratio CTs will be heavily saturated under short circuit conditions causing mal operation of over current protection. For such situations IEEE (C37.20.2) recommends use of two sets of CTs. One set with a low ratio to be used for metering and another set with a high ratio to be used for protection. The combination can thus provide accurate metering and adequate short circuit protection. This may be useful particularly in design of auxiliary system of power plants where the motor rating at 6.6kV can vary from 200kW to 9000kW. The rating of CT for protection application may be standardized as per the criteria given above whereas the ratings for metering CTs may vary as per the individual load ratings.

4.2 Rated secondary current

The standard CT secondary current ratings are 1A and 5A. The selection is based on the lead burden used for connecting the CT to meters/ relays. 5A CT can be used when current transformer and protective devices are located within same switchgear. 1 A CT is preferred if CT lead goes out of the switchgear. For example, if CT is located in switch yard and CT leads have to be taken to relay panels located in control room which can be away, 1A CT is preferred to reduce the lead burden. For CT with very high lead length, CT with secondary current rating of 0.5A can be used.

In large generator circuits, where primary rated current is of the order of few kilo-amperes only 5A CTs are used. 1A CTs are not preferred since the turns ratio becomes very high and CT becomes unwieldy.

5.0 General Protection Class

5.1 Accuracy class

Standard accuracy classes available are 5P and 10P. The figure '5' in '5P' indicates the accuracy limit in percent expressed in terms of composite error. Generally, 5P Class CTs are employed.

5.2 Accuracy limit factor (A.L.F)

Accuracy limit factor (A.L.F) is the ratio of largest value of current to CT rated current, up to which CT must retain the specified accuracy.

Example: C.T.: 5P20, 5 VA. In this case, ALF = 20 and composite error < 5 % up to 20 times rated current for burden of 5VA. If the actual burden < 5 VA, composite error is less than 5%, even for currents > 20 times rated current.

Specifying ALF > 20 is not useful as relay operating time characteristic flattens out at 20 times rated current (Refer Fig.7).

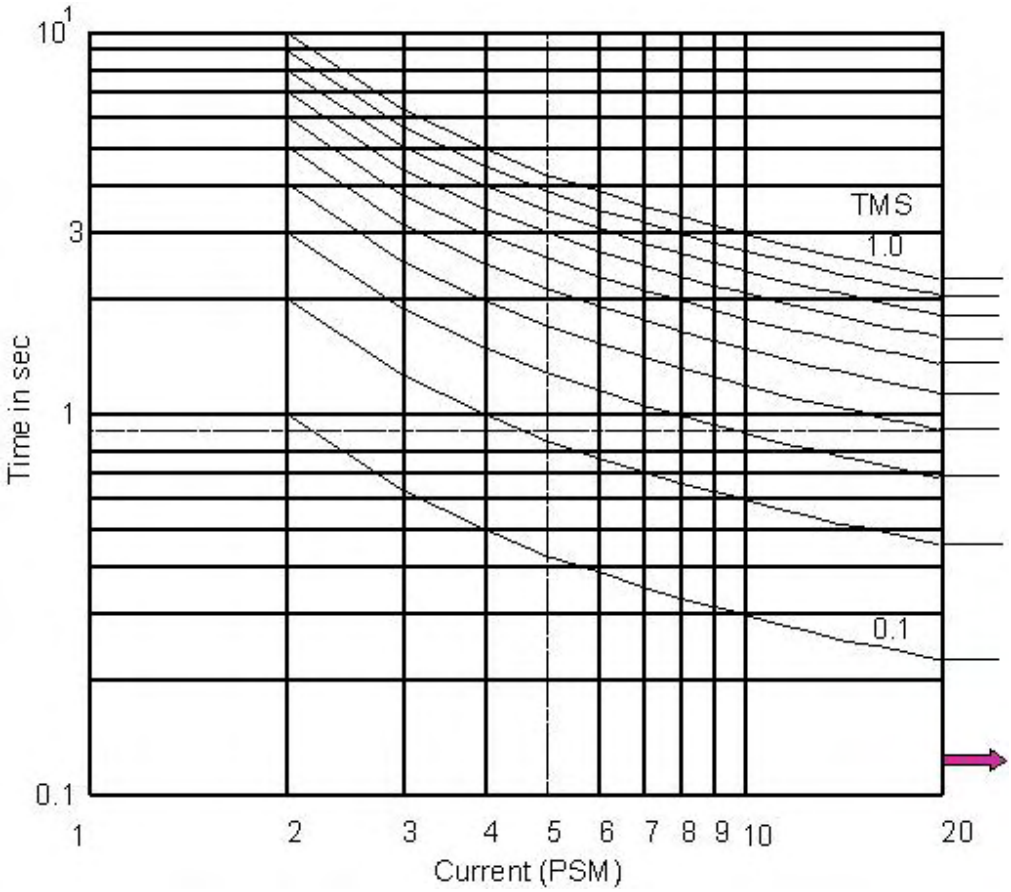

Fig 7 IDMT Characteristics

A.L.F. is relevant only for protection class CTs since it is required to retain specified accuracy at current values above normal rating to faithfully reflect the fault currents. A.L.F is not relevant for CTs mounted on neutral circuit in medium and high resistance grounded systems and for metering class.

5.3 Rated burden

Burden is the load burden in VA, of all equipment connected to CT secondary circuit, at rated CT secondary current.

Burden and accuracy limit factor (ALF) are two sides of the same coin. The selection of these two parameters depends on the voltage required to be developed by the current transformer during faults. For protection class CTs the actual voltage required on CT secondary (Refer Fig. 8)

$V_{ACTUAL} = I_F (R_{CT} + 2 \times R_L + R_R)$, *where*

I_F = *Reflected fault current,* R_{CT} = *CT resistance,*

R_L = *Lead resistance,* R_R = *Relay resistance*

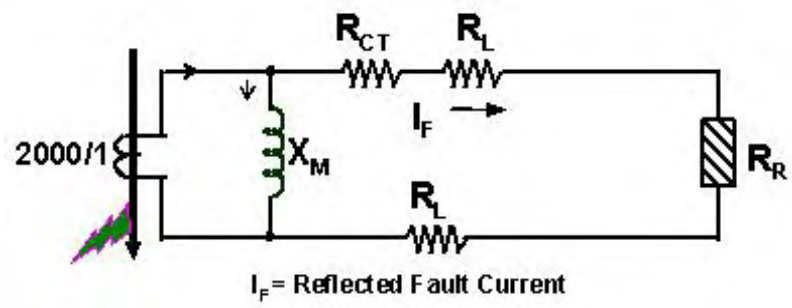

Fig 8

It may be mentioned in passing that, even if very low burden numerical relays are used, only R_R in above expression is low but other factors are significant.

The design value of CT secondary voltage is given by

$$V_{DESIGN} = \frac{\textit{Burden x Accuracy Limit Factor } (A.L.F)}{I_{RAT}\textit{(Secondary)}}$$

As the rated CT secondary current is known, any standard value of A.L.F and burden may be selected to satisfy

Design voltage across CT > Actual volts required,

$V_{DESIGN} > V_{ACTUAL}$

Example:

CT : Ratio - 800 /1: 5P20, 10 VA

I_F =30kA; R_{CT} = 3Ω ; R_L = 1Ω; R_R = 0Ω

$$V_{ACTUAL} = \left(\frac{30000}{800}\right) x(3+2x1)$$

$$= 187.5\ V$$

$$V_{DESIGN} = \left(\frac{20\ x10}{1}\right)$$

$$= 200\ V$$

The chosen parameters are acceptable since $V_{DESIGN} > V_{ACTUAL.}$

6.0 Special Protection Class

6.1 Knee point voltage (Vk)

Knee point voltage (V_K) at which CT starts saturating is defined as the point where exciting current increases by 50% for 10% increase in voltage (Refer Fig. 6). Knee point voltage is relevant only during external fault conditions and does not have significance during normal operating conditions. The knee point voltage (Vk) for Class PS CTs used in high impedance scheme is calculated for the worst condition that one of the CTs is fully saturated and the other CT has to develop

enough voltage to drive current through the other CT circuit to ensure stability during external fault.

A typical current balanced scheme which operates by sensing the difference of two or more currents measured by the CTs located on two sides of the protected object is shown in Fig. 9.

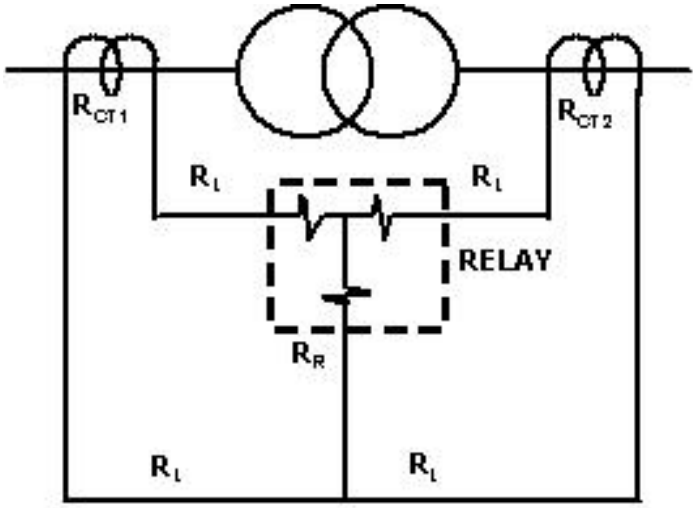

Fig 9 Current Balanced Scheme

During internal fault conditions, CT2 presents an open circuit (Refer Fig. 10).

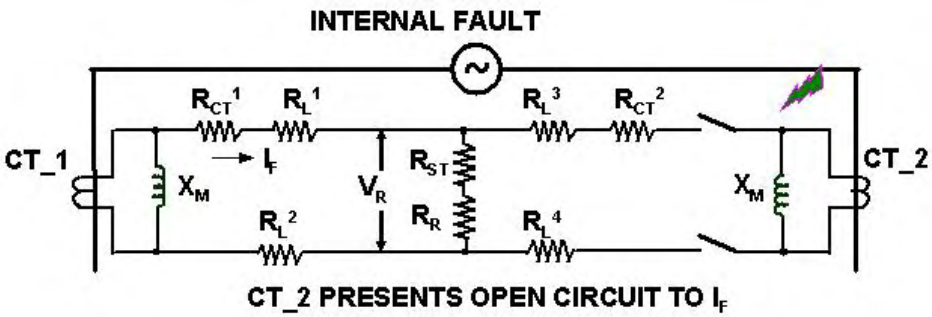

Fig 10

During external fault conditions CT2 presents short circuit when it is saturated (Refer Fig. 11).

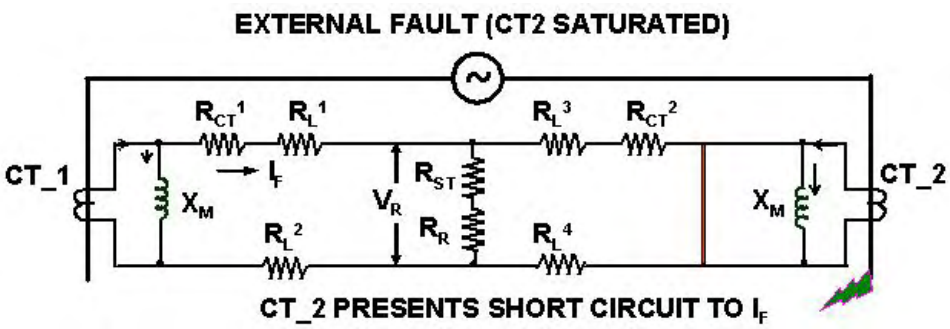

Fig 11

Now, CT1 has to develop enough voltage to drive current through the complete CT circuit.

$V_{REQUIRED}$ during external fault condition with CT2 saturated,

$V_{REQUIRED} = I_F (R_{ct1} + R_{L1}+R_{L3}+R_{ct2} + R_{L4}+ R_{L2})$

Assuming, $R_{ct1} = R_{ct2} = R_{ct}$ *and*

$R_{L1}= R_{L3}= R_{L4}= R_{L2}= R_L$

$V_{REQUIRED} = I_F (2 R_{ct} + 4 R_L)$

$V_{REQUIRED} = 2 \times I_F (R_{ct} + 2 R_L)$

Therefore, knee point voltage, for Class PS CTs is

$V_k (min) > V_{REQUIRED} = 2 \times I_F (R_{CT} + 2 R_L)$

where,

V_K (min) = Minimum Knee Point Voltage

I_F = Max. through fault current to which CTs are subjected to.

R_{CT} = C.T secondary resistance typically varies from 1 to 8 Ω

R_L = Lead resistance typically 8 ohms / km for 2.5 mm^2 Cu control cable

Modern numerical relays offer low impedance biased schemes as an alternate which achieves stability during through faults by algorithmic calculation after measuring CT secondary currents. In such cases, the CT requirements furnished by relay manufacturer may be followed.

6.1.1 Fault current for CT sizing

Following guidelines are used for choosing appropriate fault current I_F for knee point voltage calculations of CTs used in biased differential protection scheme of transformer to avoid CT oversizing:

(i) LT side of transformer - LT system fault current or 20 times rated current of LT CT, whichever is *lower*.

(ii) HT side of transformer - HT system fault current or 20 times rated current of HT CT, whichever is *lower*.

The rational for the above is as follows:

(i) In case of LT side fault, fault current will not exceed 20 times rated current assuming minimum transformer impedance as 5%.

(ii) In case of HT side fault, only CTs on HT side carry current and hence we are not worried much about CT saturation. Assume relay pickup setting as 10% (0.1 A for 1A CT) and fault current 20 times rated current. Now, even if 19A is consumed in saturation, the available secondary current of 1A is enough to operate the relay.

6.2 Exciting current (I_{EX})

Error in transformation is due to exciting current (I_{EX}) because of which the proportionality between primary and secondary current is not maintained. For Class PS CT, this proportionality is retained to a high degree by specifying a low exciting current. Usually I_{EX} <30mA is specified for 1A CT and I_{EX} < 150mA is specified for 5A CT.

6.2.1 Why I_{EX} <30mA or I_{EX} <150mA?

In current balanced scheme to avoid mal operation of protection scheme during normal operating conditions, the spill current through the differential relay should be less than the relay pick up (Refer Fig. 12).

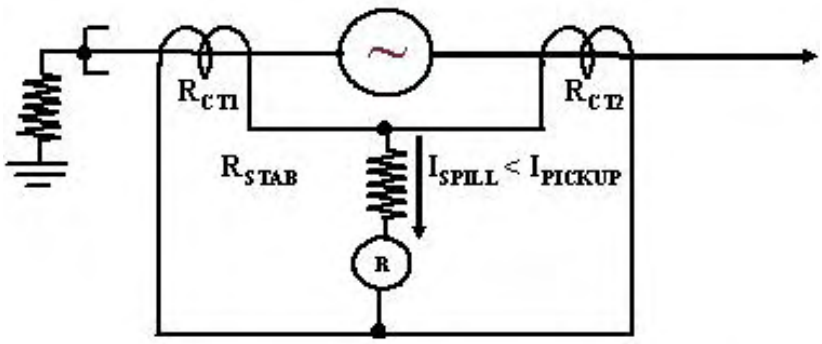

Fig 12

Therefore for such schemes the relay pickup current is set based on the number of CTs in the circuits and the exciting current for each CT. Assuming a relay pickup of 10% i.e. 0.1 A for a 1A CT, the exciting current of CTs can be <30mA when used for a three winding transformer (Refer Fig.13). It can be even 45mA for a 1A CT for a two winding transformer. On similar lines 150mA is normally specified for 5A CT.

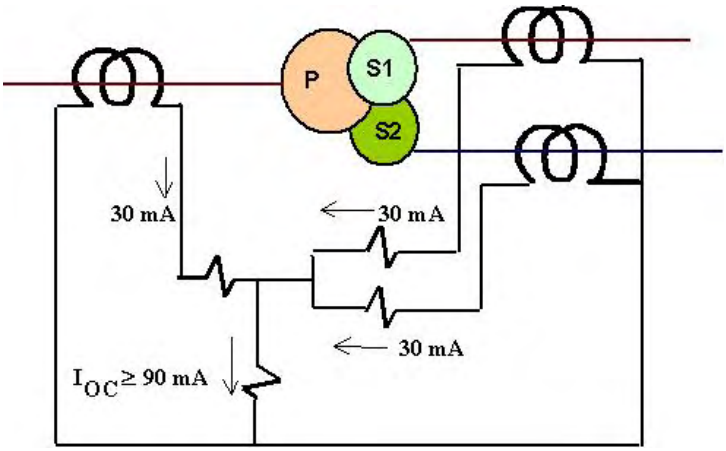

Fig 13

6.2.2 I_{EX} to be specified at V_K / 4 or V_K / 2?

I_{EX} is relevant only during normal operating conditions to ensure stability and prevent false tripping and is not relevant during faults. Under fault conditions,

Knee point voltage $(V_k) = 2 \times I_F (R_{CT} + 2 R_L)$

Under normal conditions,

$V_{CT} = I_{RAT} (R_{CT} + 2 R_L)$

$$= V_k \left(\frac{I_{RAT}}{2I_F} \right)$$

e.g. - $= \frac{I_{RAT}}{2I_F} = \frac{3kA}{2x30kA}$

$= 0.05 \Rightarrow 5\%$

As seen from above, under healthy conditions, voltage required to be developed by CT is only 5% of the knee point voltage. Therefore, specifying I_{EX} @ V_K / 4 (25%) is more than adequate whereas specifying I_{EX} @ V_K / 2 (50%) is a conservative design resulting in bigger size of CTs. The exciting current at V_K / 4 is less than that at V_K / 2 (Refer Fig. 14). Considering a limiting value of 30mA for exciting current, specifying 30mA @ Vk/4 is adequate.

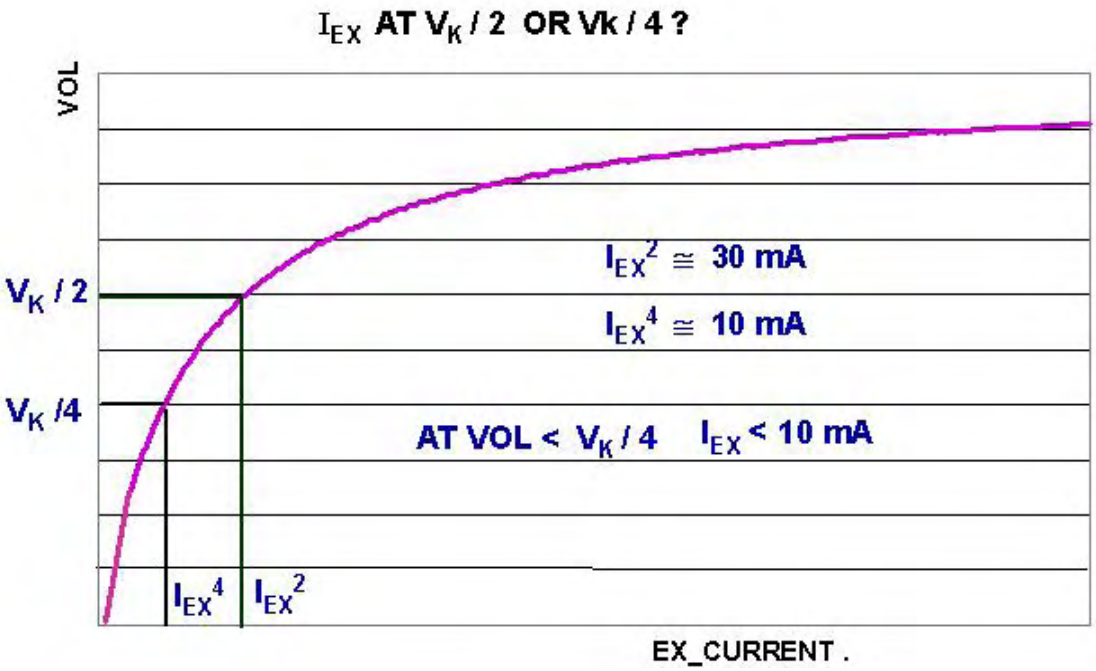

Fig 14

Generally identical class PS CTs are used in both sides of the protected equipment. It is not necessary to order both CTs from same vendor as long as class PS requirements are met. Point by point matching of saturation

characteristics for the CTs is not mandatory and not required. For example, if I_{EX} < 30 mA @ $V_K/4$ for both the CTs, they are acceptable. (Refer Fig. 15).

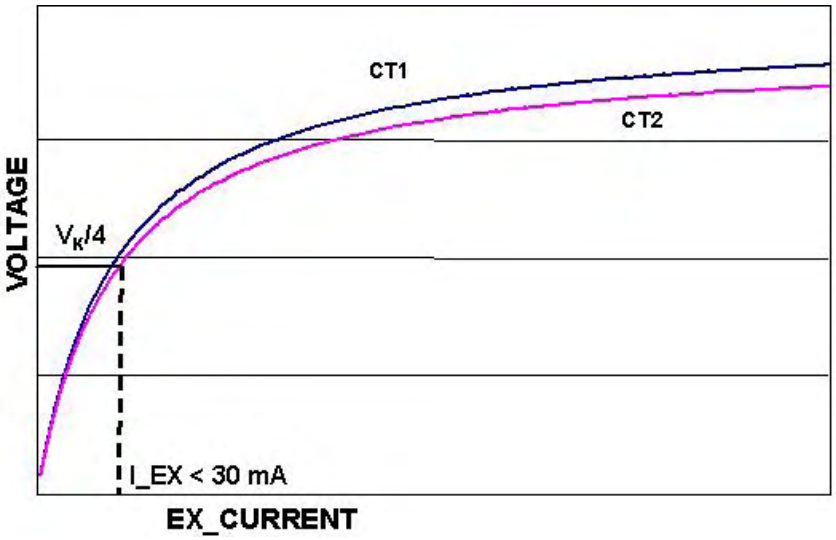

Fig15

A point may be noted here that it is not mandatory to use Class PS CTs in current balanced schemes. General protection class CTs can be used as long as the CT have low exciting current and is able to develop enough knee point voltage required for the said application. The site test results given in table (Table-1) shows that the exciting current for a protection class CT is less than that of a Class PS CT. Also, it has a higher knee point voltage compared to a Class PS CT.

Table-1			
Special Protection Class		**General Protection Class**	
1600/5A, Cl. PS, Vk > 130, Ie < 150mA @ Vk/4, Rct < 0.8 ohm		**1600/5A, Cl. 5P20, 20VA**	
Volts	**Current (mA)**	**Volts**	**Current (mA)**
10	10	10	5
75	42	40	12
130	71	80	20
143	85	120	33
158 (V_k)	**111**	**171 (V_k)**	**77**
174	181	190	132

6.3 Secondary winding resistance (Rct)

Winding resistance is part of the CT burden and is taken into account while determining knee point voltage requirement of CT. For special protection class CTs (Class PS), CT secondary winding resistance is usually specified. However it is preferable to furnish expression for knee point voltage, fault current and lead resistance values and not to specify both knee point voltage and Rct to the vendor. The vendor can then optimally choose Rct to get the desired knee point voltage. This will avoid oversizing of CTs.

7.0 Metering Class

7.1 Accuracy class

Accuracy class is defined as the maximum ratio error at rated current and at rated burden. Class 0.1, 0.2 and 0.5 CTs are used for precision industrial metering / tariff metering. As per IS -2705 accuracy is not guaranteed for current less than 20% of the rated current. If current through the metered line is much less than the rated current of CT, for majority of time, anticipated accuracy is never realised in practice. This is mostly true for tie lines connecting industrial plants with captive power plant and grid.

7.2 Instrument security factor (I.S.F)

Instrument security factor (I.S.F) is defined as the ratio of minimum value of primary current to the rated current at which composite error of CT is *greater than* 10%. This signifies the current at which the CT starts saturating to protect the apparatus supplied by CT in the event of the system fault. Therefore it may be emphasized that metering CTs *should saturate* after certain current may be$10I_N$ to protect meters while protection CTs *should not saturate* up to $20I_N$ to ensure accuracy during fault conditions. Therefore knee point voltage and ALF are not relevant for metering CTs. The site test results given in the table below (Table-2) shows that knee point voltage for a metering CT is much less than that of a protection class CT. This is one way to identify metering core at site.

Generally I.S.F. is specified less than 5. However this does not have much practical significance and I.S.F = 10 is acceptable as the ammeters and current coils of meters are designed to withstand 10 times the rated current for 5 seconds.

It may be noted that a current transformer with high accuracy class and low I.S.F cannot be realised in practice. High accuracy class requires low excitation current which in turn results in bigger core. The saturation point of a bigger core is high which contradicts the requirement of low I.S.F.

Table-2			
Metering Class		**General Protection Class**	
1600/5A, Cl. 0.5, 15VA		**1600/5A, Cl. 5P20, 20VA**	
Volts	**Current (mA)**	**Volts**	**Current (mA)**
6	5	40	12
10	7	80	20
20	12	120	33
30 (V_k)	**22**	**171 (Vk)**	**77**
33	33	190	132

It may be worth mentioning that meters can also be connected to protection core for feeders with instantaneous protection where fault clearing time is less than 100ms. As mentioned above, meters are designed to withstand 10 times the rated current for 5 seconds and faults are generally cleared within one (1) sec. Therefore for 1 sec the coil can withstand,

$$I^2 \times 1 = (10\ I_R)^2 \times 5$$

$$= 500\ I_R^2$$

$I = 22.4\ I_R$, *where* I_R *is the CT rated current*

Therefore, if I_{FAULT} is less than 22.4 times CT rated primary current, indicating meters can be connected to protection core and no separate metering core is required.

7.3 Rated burden

Burden usually expressed in VA indicates the impedance of the CT secondary circuit at a specified power factor and at the rated secondary current. The accuracy requirements are specified at rated burden. For a current transformer the rated burden should be carefully chosen based on the equipments connected in the secondary circuit as burden has bearing on the price of CT.

8.0 Conclusion

The article covers salient aspects that the user should consider to realize CTs that are not oversized. A radical rethink when selecting primary rating of CT for protection application is needed. Extreme care shall be exercised when selecting knee point voltage and exciting current for CTs used in current balanced

schemes. I.S.F for metering CTs can be 10 without endangering meters. The practicing engineer is encouraged to apply the ideas presented here to realize optimally sized CTs.

9.0 References

[1] Protective Relays- Application Guide – GEC Measurements

[2] The design of Electrical Systems for large projects (in India) – N Balasubramanyam

[3] Electrical Measurements and Measuring Instruments – E. W. Golding

ieema journal

Grounding of Electrical System – Part I

Dr K Rajamani,

Reliance Infrastructure Ltd., MUMBAI

(May 2006, IEEMA Journal, Page 52 to 56)

Grounding of Electrical System – Part I

Dr K Rajamani, Reliance Infrastructure Ltd., Mumbai

1.0 Introduction

The two areas which have significant impact on system protection and operation are earthing and grounding. Earthing of electrical system has been dealt in detail in two companion papers [1, 2]. In this article, concepts of grounding will be developed. In Part I, ungrounded system is taken up.

2.0 Ungrounded vs Grounded system

Up to 1940, most of the systems were operated as ungrounded system. The neutrals of the system were kept floating as the ground connection is not useful for transfer of three phase power in three-wire system. The majority of the faults (70%) on any system are line to ground faults. In ungrounded system, due to absence of return path, the ground fault current is very low. As the service is not interrupted, the fault can be located and rectified at leisure. But soon problems like transient over voltages, arcing grounds and insulation failures began to surface. To overcome these problems, grounding the neutral was considered as a possible solution. Of course the grounded system results in flow of large ground fault current. The over voltage problem in ungrounded system is replaced by over current problem in grounded system. Even today, this debate on grounded vs. ungrounded system is going on and 'The Preferred Alternative' does not exist!

3.0 Difference between Neutral and Ground

Before we proceed further, the concept of neutral will be introduced. The neutral and ground are not always the same. The ground is always at zero voltage plane, whereas the neutral can be at ground (zero) potential or it can have some non - zero potential with respect to the ground. In case the neutral is at zero potential, then there is no neutral shift. If neutral is at non - zero potential, then it is considered to be shifted.

For definition of neutral refer Fig 1. Connect three ideal and equal resistors to three phases. The common junction point is the 'neutral'. The voltage of common junction point with respect to ground is neutral voltage. From this definition follows an important fact – 'The zero sequence voltage at any point in network corresponds to the neutral shift at that point in the network'. From Fig 1,

$$\left[\frac{(V_R - V_{NG})}{R}\right] + \left[\frac{(V_Y - V_{NG})}{R}\right] + \left[\frac{(V_B - V_{NG})}{R}\right] = 0$$

$$V_R + V_Y + V_B = 3V_{NG} \qquad \text{..... (1A)}$$

May 2006, IEEMA Journal, Page 52 to 56

From the theory of symmetrical components [3],

$V_R + V_Y + V_B = 3V_0$ .....(1B)

Hence, $V_{NG} = V_0$ .....(1C)

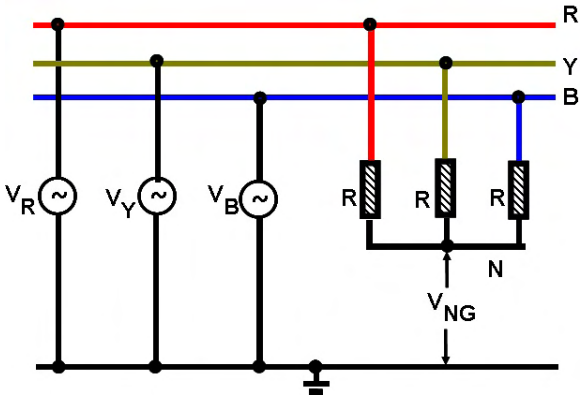

Fig 1 Neutral and Zero Sequence Voltage

4.0 Ungrounded system (Balanced operation)

In ungrounded system, there is no intentional connection to ground provided for exclusive grounding purpose. In reality, however, no ideal ungrounded system exists, since phases get coupled to ground through stray capacitances (Fig 2).

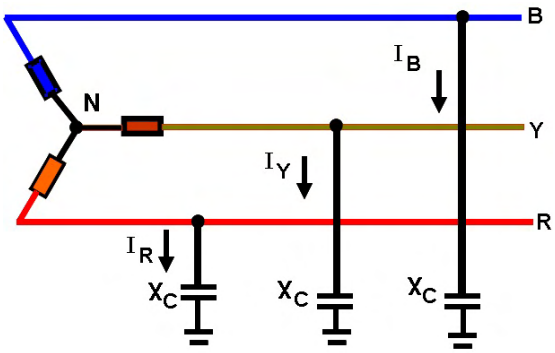

Fig 2 Ungrounded system – Balanced Steady state operation

The phasor diagram is shown in Fig 3.

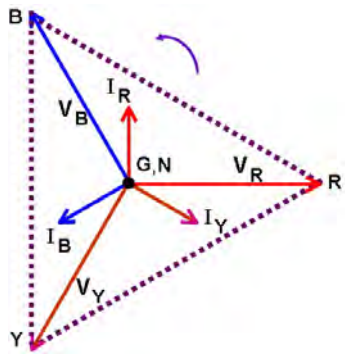

Fig 3 Phasor diagram

The phase voltages are V_R , V_Y and V_B. (*It is common to write with single subscript for voltage to ground, e.g. V_R instead of V_{RG}*). The line voltages are V_{RY}, V_{YB} and V_{BR}.

$|V_R| = |V_Y| = |V_B| = 1\ pu$ *(say 11kV/√3)*

$|V_{RY}| = |V_{YB}| = |V_{BR}| = \sqrt{3}\ pu$ *(i.e. 11kV)*

The phase current leads phase voltage by 90°.

$I_R + I_Y + I_B = 0$

$V_R + V_Y + V_B = 0$

From Eqn (1),

$V_{NG} = V_0 = 0$

Neutral is at ground potential and there is no neutral shift.

5.0 Ungrounded system (Fault condition)

Now consider a line to ground fault on phase R (Fig 4). The phasor diagram is shown in Fig 5. R phase capacitance is shorted since fault is on phase R. Now R is at ground potential G. Voltages that appear across other two capacitances are line voltages V_{YR} and V_{BR}.

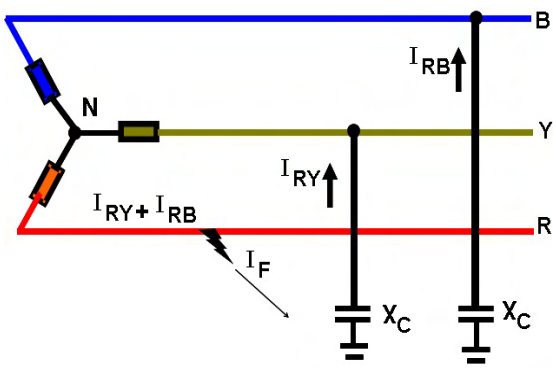

Fig 4 Ungrounded system – Line to ground fault

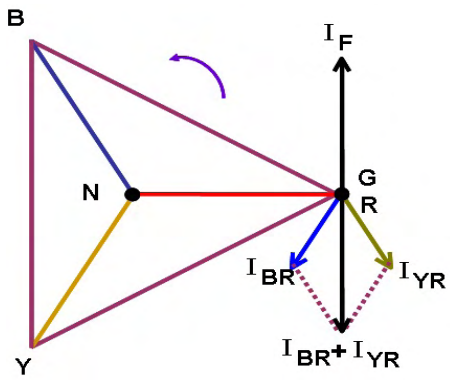

Fig 5 Phasor Diagram

The capacitive currents lead respective voltages by 90°. There is no change in line voltages but the voltages to ground of unfaulted phases rise to line voltage level.

$/V_{RY}/ = /V_{YB}/ = /V_{BR}/ = \sqrt{3}\ pu$

(Line voltage triangle is still equilateral).

$/V_Y/ = /V_B/ = \sqrt{3}\ pu$

The fault current can be calculated as follows:

$/I_{BR}/ = /I_{YR}/ = \sqrt{3} / X_C$

$I_F = I_{RB} + I_{RY} = 3 / X_C$

The capacitive current per phase $1/X_C$ of typical industrial system or auxiliary system of a power plant can be from 2 to 5A. Thus the fault current will be in the range of 10A which leads to the phenomenon of 'arcing grounds'. The breaker duty becomes onerous due to possibility of restrikes when trying to break the capacitive currents.

The open delta voltage (Fig 6) is given by

$V\Delta = V_R + V_Y + V_B = 3V_{NG}$

$V_R = 0;\ /V_Y/ = /V_B/ = \sqrt{3};\ V\Delta = 3\ pu$

From Eqn (1),

$V_{NG} = V_0 = 1\ pu.$

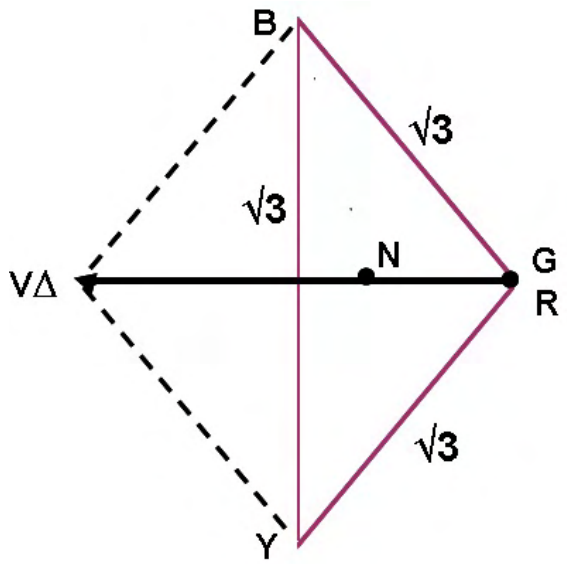

Fig 6 Open delta voltage

The neutral is no more at ground potential but is shifted by as much as phase voltage. For example, in a 11 kV system, at the point of fault, the neutral voltage instead of zero will be at 11/√3 kV. The corresponding open delta voltage will be 11x √3 kV.

For comparison, we will evaluate the neutral shift in solidly grounded system. The phasor diagram, for line to ground fault on phase R, is shown in Fig 7. There is no change in line voltage V_{YB} as fault is on phase R.

$/V_{YB}/ = \sqrt{3}\ pu;\ /V_{RY}/ = /V_{BR}/ = 1pu$; (Line voltage triangle is isosceles).

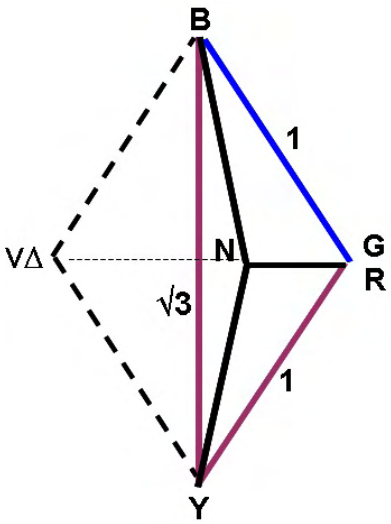

Fig 7 Phasor diagram – Solidly grounded system

The voltages to ground of unfaulted phases remain at 1 pu compared to √3pu in ungrounded case.

$V_R = 0;\ /V_Y/ = /V_B/ = 1;$

$V\Delta = V_R + V_Y + V_B$

$= 3V_{NG} = 1\ pu$

$V_{NG} = V_0 = 0.33\ pu$

This brings out an important fact that neutral shift *occurs irrespective of type of grounding*. In case of ungrounded system neutral shift is high (1 pu) and in solidly grounded system neutral shift is low (0.33 pu). A sensitive voltage relay connected across open delta PT can be used to detect ground fault even for solidly grounded system.

6.0 Advantages of ungrounded system

Service continuity, even with one ground fault hanging, is feasible. This is desirable in continuous process industries.

The fault current at the point of fault is very low. The core damage in rotating machine (to be discussed in Part 2) is minimal.

7.0 Disadvantages of ungrounded system

The possibility of restrike in a circuit breaker is high when opening capacitive currents of 10A to 15A. This leads to insulation failure.

During ground faults there is over-voltage on healthy phases and neutral shift is high. This results in following design considerations:

(i) Neutral has to be fully insulated.

(ii) Ligtning arrestor has to be rated for 100%. For example, in a 11kV system, LAs have to be rated for 11 kV even though they are connected from phase to ground.

(iii) The over voltage factor for PT shall be 1.9 pu (instead of 1.5 pu)

(iv) The cables have to be rated for full line voltage. For a 11 kV system, the rating shall be 11kV/11kV, i.e. phase to phase insulation will be 11kV and phase to ground insulation will also be 11 kV. This definition is to be previously called UE grade (Unearthed grade) but recent amendment to IS 7098 (draft) has withdrawn this terminology and replaced by one step higher voltage grade. Instead of 11kV/11 kV grade, it will be specified as 12.7 kV/22kV.

(v) The chances of multiple ground faults hanging on the system are high unless prompt action is taken to identify and isolate the first ground fault. In this context, it is useful to recognize following trip logic. Refer Fig 8.

(a) Fault on phase R to G (Ground) and phase Y to G on Feeder A: Feeder A trips.

(b) Fault on R to G on feeder A and fault on Y to G on feeder B: Both feeders A and B trip.

(c) Fault on R to G on feeder A and fault on R to G on feeder B: None trips; case of multiple ground faults hanging.

8.0 Ground fault detection in ungrounded system

In ungrounded system current as a handle for ground fault detection is not reliable as fault current is too low. Only voltage is available for ground fault detection. It may be emphasized that voltage can be used for ground fault *detection* but not for *location*. The difference between voltage handle and current handle is that voltage is a system wide attribute while current is feeder specific. In Fig 8, voltage is same for feeder A, B or C. In fact it is the common 'bus' voltage. The currents are however feeder specific. In case of grounded system, if a ground fault occurs on feeder A, large current flows on feeder A and this current handle is used to trip feeder A. Location of ground fault that fault is only on feeder A is possible due to availability of sufficient current handle. In case of ungrounded system this is not available. Voltage handle indicates the presence of ground fault. To identify the location, feeders are tripped one by one. When the faulted feeder is tripped voltage handle indicates healthiness.

May 2006, IEEMA Journal, Page 52 to 56

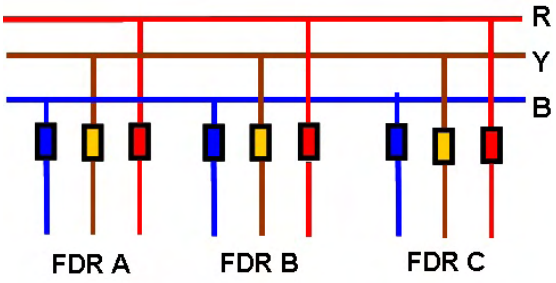

Fig 8 Ground fault detection

9.0 Ground fault detection in DC system

Remarks on ground fault detection in DC system may be appropriate here. DC system is usually ungrounded. For ground fault detection, the center point is earthed through a very high resistance with CZA (Center Zero Ammeter). Refer Fig 9.

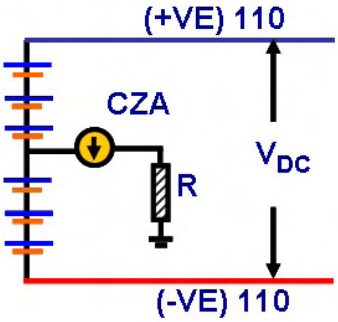

Fig 9 DC system

If fault occurs on positive pole, milliammeter deflection is on one side of zero and if fault is on negative pole, the deflection is on other side of zero. Fault on either positive or negative pole does not hamper the system operation. But to locate the ground fault in DC system is very tedious. A typical method to detect ground fault is shown in Fig 10. Each feeder is fed through a make before break switch. If CZA alarm comes, each feeder is switched from normal to test position. For the faulted feeder, CZA alarm on one battery vanishes and appears on other battery.

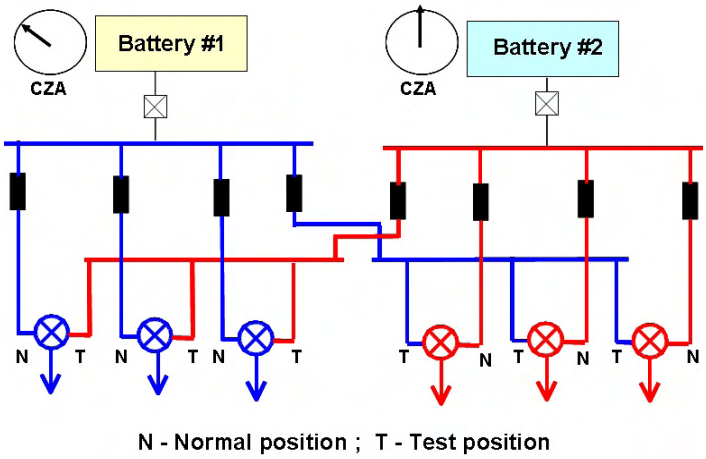

Fig 10 Ground fault detection in DC system

10.0 Ground fault detection in AC system

The most preferred method to detect ground faults in ungrounded system is through open delta PT connection shown in Fig 11.

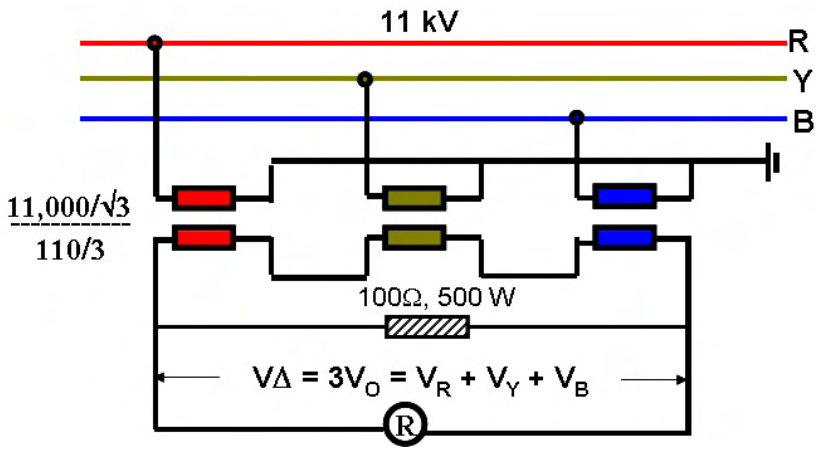

Fig 11 Open Delta PT Connection

For a line to ground fault, on 11 kV system, from Eqn(1),

$V\Delta = V_R + V_Y + V_B = \sqrt{3} \times 11\ kV$

Voltage on secondary side of PT:

$$V_{REL} = \left[\frac{(110/3)}{(11000/\sqrt{3})}\right] \times \sqrt{3} \times 11000$$

$$= 110\ V$$

The reason for choosing secondary side PT voltage as (110/3) instead of usual (110/√3) becomes evident now. Relay rated for 110 V can be connected across open delta. If the secondary side PT rating is (110/√3), voltage across the relay will be √3 x 110 V. Relay rated for 110 V and wired for alarm can be damaged in this case.

At some sites, over heating of PT is observed. It is probably due to resonance between magnetizing reactance of PT and connected system capacitance. This is termed in literature as 'ferro-resonance'. To avoid ferro-resonance, it is recommended to provide a damping resistor across the relay branch as shown in Fig 11. The resistor value is typically 100 Ω. The resistor converts ungrounded system into very high resistance grounded system. Further discussion on this aspect will be covered in a future article.

Sometimes, auxiliary PT is used in open delta connection as shown in Fig 12.

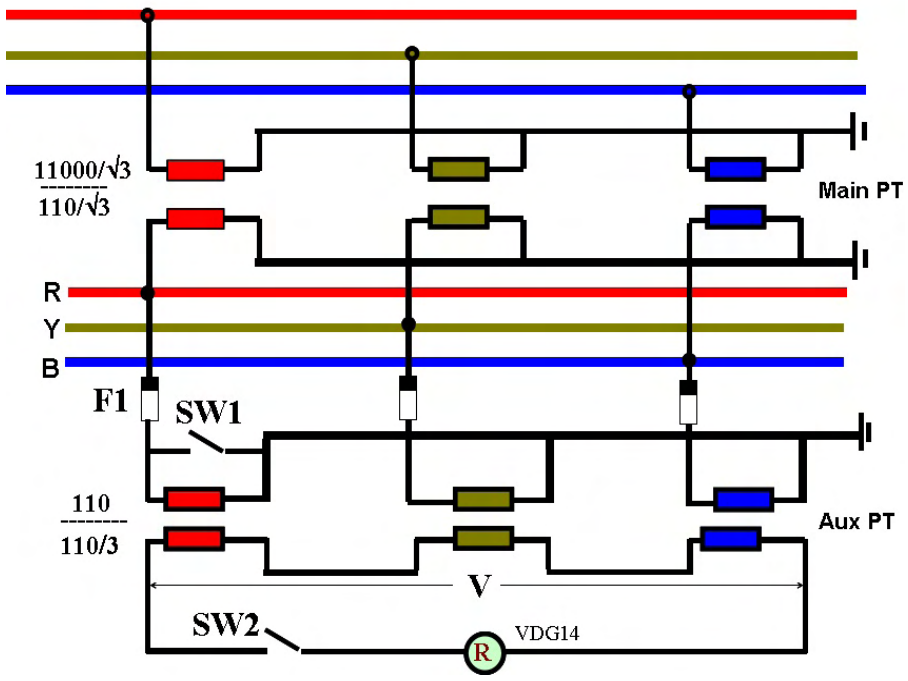

Fig 12 Auxiliary PT Connection

Switches SW1 and SW2 are used only when testing the scheme. Many times relay operation is found to be sluggish during testing. One of the reasons could be that the primary winding of phase under test is *not shorted*. The correct test procedure is as follows:

(i) Keep switches SW1 and SW2 off

(ii) Measure open delta voltage 'V'. It should be nearly zero

(iii) Remove fuse F1 on R phase

(iv) Close switch SW1 (to simulate V_R= 0)

(v) Measure open delta voltage 'V'. It should be nearly 110 Volts.

(vi) Close switch SW2

(vii) Check voltage relay operation

(viii) Repeat the above procedure for Y phase and B phase

11.0 Ground fault detection on ships

The alternators supplying power in ships are in majority of cases rated for 440V. On land, LT system is solidly grounded as per IE regulation. But on ships, the system is ungrounded to ensure continuity of supply under single earth fault conditions. To detect earth faults, arrangement shown in Fig 13 is used.

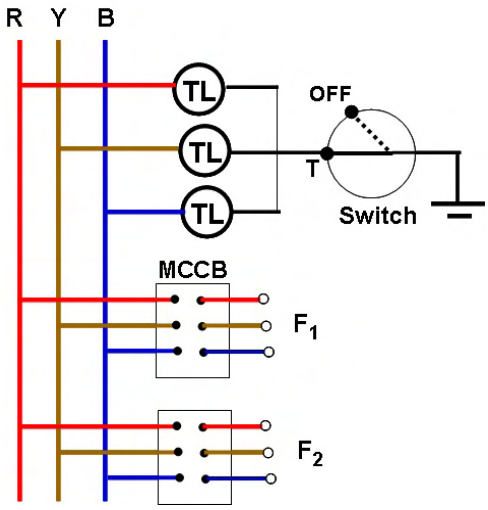

Fig 13 Earth indication (Healthy system)

Under healthy conditions the three Test Lamps will glow bright. Under earth fault condition on, say phase R, Test Lamp on R phase will be dimmer but the other two lamps will be bright (Fig 14). The earth indication switch is normally kept in OFF position. The operator periodically puts the switch in Test position to test for earth fault. If earth fault indication comes, the operator has to open feeder by feeder to isolate faulted feeder.

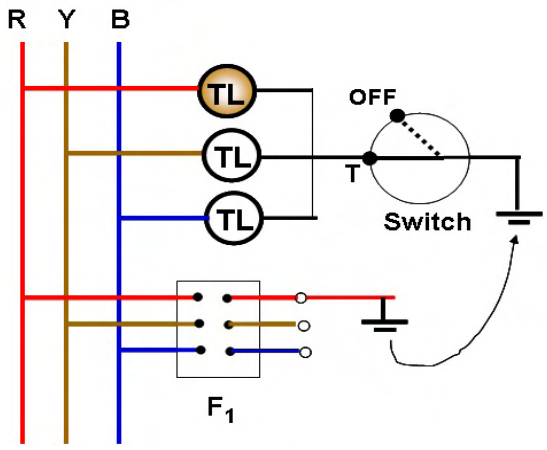

Fig 14 Earth indication (Faulted system)

12.0 Single phase PT connection

A single phase PT is connected across R phase. Under and over voltage relays are connected as shown in Fig 15. For ground fault on R phase, under voltage relay picks up. For ground fault on Y phase or B phase, over voltage relay picks up as in these cases R phases voltage rises to √3 times normal value.

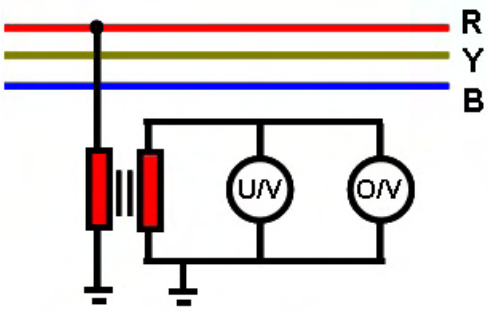

Fig 15 Single phase PT Connection

13.0 Neutral inversion and ferro-resonance

The single phase PT connection, under certain system conditions, can lead to destructive events like inversion of neutral and ferro-resonance. For this reason, this connection is rarely used in practice. The equivalent circuit is shown in Fig 16.

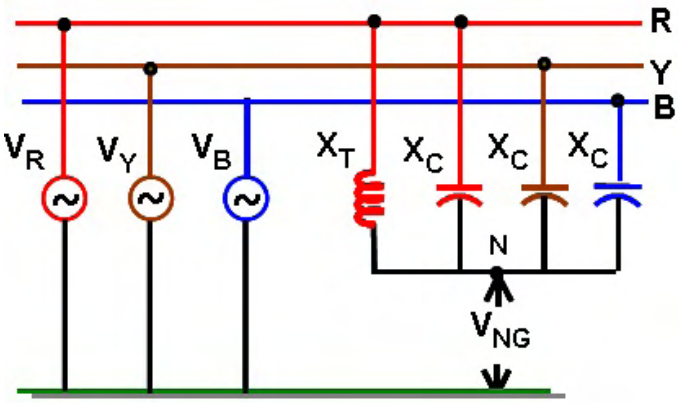

Fig 16 Equivalent Circuit

V_R , V_Y , V_B : Phase to ground impressed voltages

V_{NG} : Neutral to ground voltage

X_T : Magnetizing reactance of PT

X_C : System capacitance per phase

$$I_T = \frac{(V_R - V_{NG})}{jX_T}$$

$$I_R = \frac{(V_R - V_{NG})}{-jX_C}$$

$$I_Y = \frac{(V_Y - V_{NG})}{-jX_C}$$

$$I_B = \frac{(V_B - V_{NG})}{-jX_C}$$

Applying KCL to node N,

$$I_T + I_R + I_Y + I_B = 0$$

With balanced impressed voltage,

$V_R + V_Y + V_B = 0$

From the above equations,

$$V_{NG} = \frac{V_R}{\left[1-\left(3X_T / X_C\right)\right]}$$

With V_R = 1 pu, the variation of V_{NG} with respect to (X_T / X_C) is shown in Fig 17. If the capacitive reactance is very much less than magnetizing reactance of PT {(X_T / X_C) ratio is large}, neutral to ground voltage is nearly zero.

When (X_T / X_C) = 1/3, V_{NG} = ∞

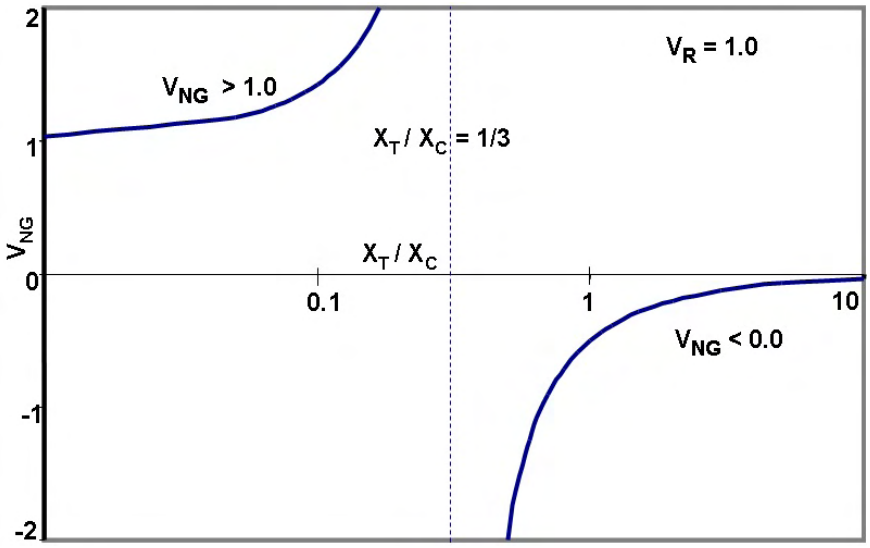

Fig 17 Neutral voltage variation

This condition, also known as ferro-resonance (resonance between iron path in PT and connected system capacitance), leads to destructive over voltages.

If the capacitive reactance is very much greater than magnetizing reactance of PT {(X_T / X_C) ratio is small}, neutral to ground voltage is greater than 1 pu. Refer Fig 18.

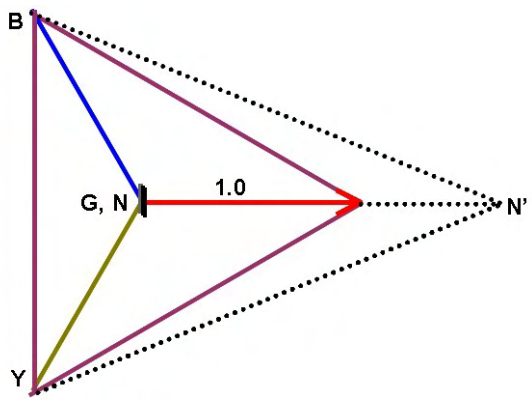

Fig 18 Neutral Inversion

The neutral no longer remains within the voltage triangle but lies outside. This is termed as 'neutral inversion'. Under normal conditions, N = G (no neutral shift), and remains within the voltage triangle. Under neutral inversion conditions, N shifts to N'.

The peculiarity of the curve shown in Fig 17 is that V_{NG} does not lie between 0 to 1 pu.; *either it is above 1 or below 0*. However this becomes obvious if we consider a simple (L-C) circuit as shown in Fig 19.

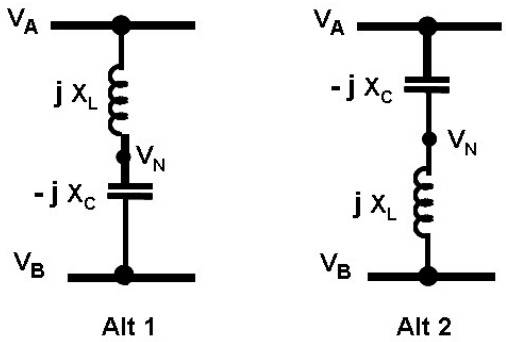

Fig 19 (L-C) Network

Let $V_A = 1$; $V_B = 0$

The intermediate voltage, from circuit analysis, for Alt 1:

$$V_N = 1 + \left[\frac{1}{\{(X_C / X_L) - 1\}} \right] \qquad \text{.....(2)}$$

If $(X_C / X_L) > 1$,

$V_N > 1$ *i.e.* $(V_N > V_A)$

If $(X_C / X_L) < 1$,

$V_N < 0$ *i.e.* $(V_N < V_B)$

For example, if $(X_C / X_L) = 5$, $V_N = +1.25$ *and if* $(X_C / X_L) = 0.2$, $V_N = -0.25$.

V_N is either above 1 or below 0.

Series reactors are provided with capacitors in power factor improvement circuits. The function of series reactor is to limit the inrush current when capacitor is charged. Usually 0.5% to 6% reactors are employed in these schemes. Two alternatives of connecting the reactor are possible. In Alt 1, reactor is on bus side and capacitor is on neutral side. In Alt 2, capacitor is on bus side and reactor is on neutral side. Assume 6% reactor is used ($X_L = 0.06X_C$). For Alt 2, the intermediate voltage is given by:

$$V_N = 1 + \left[\frac{1}{\{(X_L / X_C) - 1\}} \right] \qquad \text{..... (3)}$$

For Alt 1, from Eqn (2), V_N is 106%. The maximum voltage to ground experienced by both the capacitor and reactor is 106%.

For Alt 2, from Eqn (3), V_N is -6%. The maximum voltage to ground experienced by capacitor is 100% and reactor is subjected to only a maximum of 6% under steady state conditions.

14.0 Conclusion

The main features of ungrounded system were brought out in this article. The definition of neutral was introduced and its relationship with zero sequence voltage was established. The measurement of neutral shift using open delta PT was explained. Methods to detect ground faults in ungrounded system were described. Finally the phenomena of ferro-resonance and neutral inversion were explained. The practicing engineers may be able to understand and solve some of their site problems based on the concepts enunciated here.

15.0 References

[1] "Earthing of Electrical system – Part I", IEEMA Journal, Aug 2004, pp 37 – 40.

[2] "Earthing of Electrical system – Part II", IEEMA Journal, May 2005, pp 32 – 36.

[3] Protective Relaying – Principles & Applications: J Lewis Blackburn, Marcel Dekker Pub.

ieema journal

Grounding of Electrical System – Part II

Dr K Rajamani,

Reliance Infrastructure Ltd., MUMBAI

(June 2006, IEEMA Journal, Page 51 to 58)

ieema journal

Grounding of Electrical System – Part II

Dr K Rajamani, Reliance Infrastructure Ltd., Mumbai

1.0 Introduction

In Part I, basic concepts of grounding were introduced [1]. The essential features of ungrounded system were elaborated. In this article we will graduate to grounded systems. The definition of 'effective grounding' is given. The features of Resistance grounding and Reactance grounding will be covered. The operation of zig-zag connection will be demystified. Star-delta and open delta connections to ground the ungrounded system are explained. The relative advantages of each type of grounding are examined. The over voltage problems in non-solidly grounded systems are discussed. Finally peculiar ground fault current distributions under some system conditions are illustrated.

2.0 Reasons for grounding

It enables sufficient ground fault current to flow so that selective isolation of faulted section is feasible. During abnormal system conditions like fault, it minimizes the 'neutral shift' and limits the over voltages appearing on the system.

Ungrounded system is cursed with overvoltage problem. In grounded system the overcurrent problem has to be solved.

3.0 Grounding locations

(i) The neutral of star connected stator winding of generator, Fig 1.

(ii) The neutral of star winding of power transformer, Fig 2.

(iii) The neutral of 'grounding transformer', Fig 3.

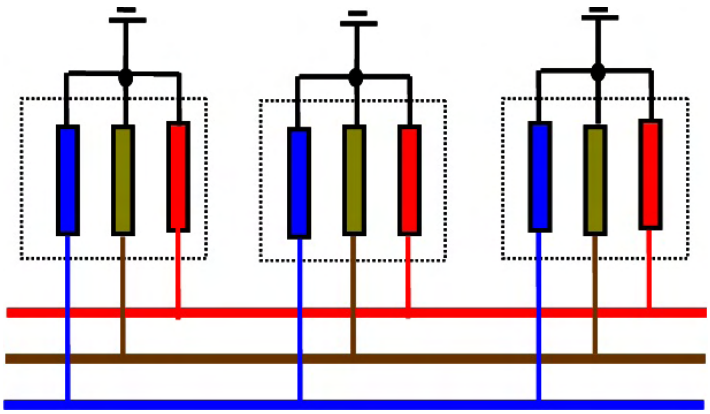

Fig 1 Neutral of star connected generators

June 2006, IEEMA Journal, Page 51 to 58

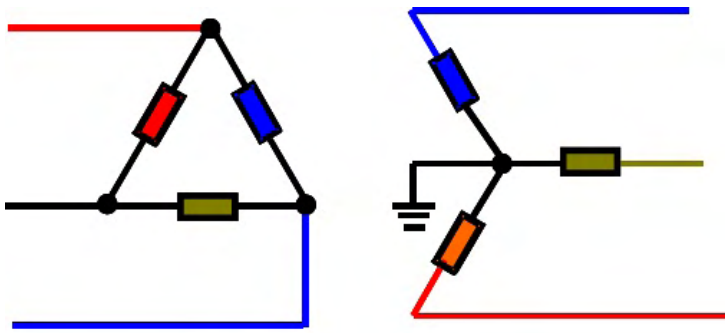

Fig 2 Neutral of star winding of transformer

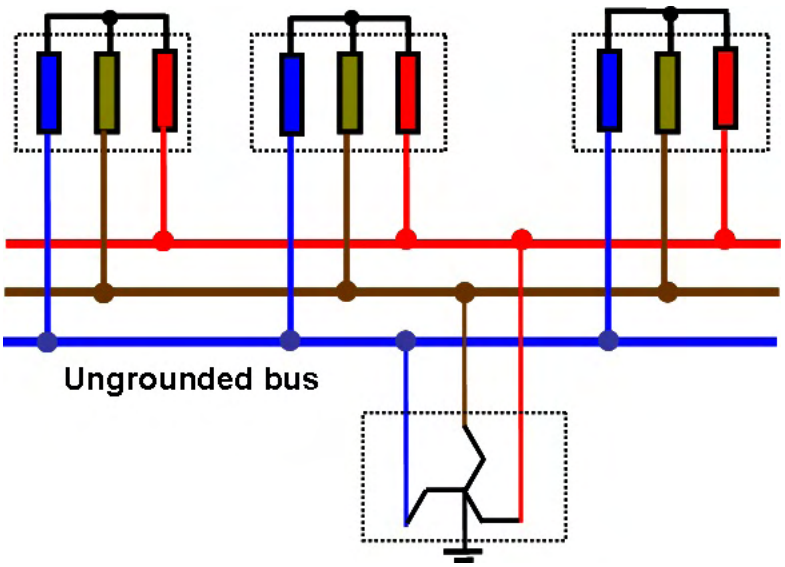

Fig 3 Neutral of grounding transformer

4.0 Grounding methods

(i) Solidly grounded system

(ii) Resistance grounded system

(iii) Reactance grounded system

The above classification is based only on the nature of external circuit connected between neutral and ground. Each of the above will be discussed in the later sections.

5.0 Measure of grounding effectiveness

What constitutes 'effective' grounding is addressed by evaluating certain parameters. Based on extensive simulation studies, it has been established that if the parameters are within the specified range, the transient over voltages under disturbed system conditions are limited.

One such figure of merit extensively used is given below.

$$K_F = \frac{I_{1PH}}{I_{3PH}} \qquad \text{..... (1)}$$

I_{1PH} : Single phase to ground fault current

I_{3PH} : Three phase to ground fault current

For effectively grounded system, $K_F > 0.6$.

Refer Table 1. Case1 qualifies as effectively grounded system. Other cases fall under non-effectively grounded system. Later it will be seen that cases 1,2 and 3 pertain to solidly grounded, low resistance grounded and high resistance grounded system. A point worth emphasizing here is that *even if a small resistance* is introduced between neutral and ground, the system tends to become non-effectively grounded.

Table 1

Case	I_{3PH} (kA)	I_{1PH} (kA)	K_F
1	40	40	1
2	40	1	0.025
3	40	0.01	0.00025

Another figure of merit is the 'Earth fault factor' - E_F

E_F = Max phase to earth voltage of sound phases under ground fault condition / Rated phase to earth voltage under healthy condition.

For effectively grounded system, $E_F < 1.4$.

For ungrounded system, $E_F = \sqrt{3}$.

The standards give a more precise definition for effectively grounded system [2].

"A system or portion of the system can be said to be effectively grounded when for all points in the system or specified portion thereof

$$\left(\frac{X_O}{X_1}\right) < 3 \quad \text{and} \quad \left(\frac{R_o}{X_1}\right) < 1\text{''}.$$

If the system is solidly grounded (R_0 is small) the second relation is usually satisfied. As for the first relation, consider a typical EHV network shown in Fig 4.

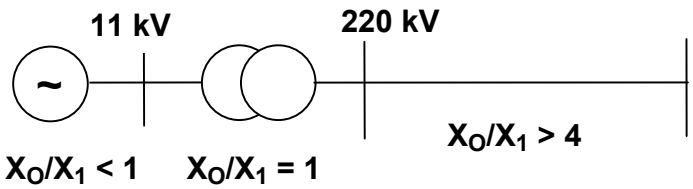

Fig 4 Typical EHV System

For generator, X_0 (zero sequence reactance) is about 10% and X_1 (transient reactance in this case) is about 25%. Hence $\left(\frac{X_O}{X_1}\right) < 3$.

For transformer, X_0 and X_1 are nearly same and is about 12%. Thus $\left(\frac{X_O}{X_1}\right) < 3$.

However, in case of EHV transmission line, $\left(\frac{X_0}{X_1}\right) > 4$.

Thus for the same system, at generator and transformer terminals, the system is effectively grounded. But at the end of a long radial EHV line, the system may not be effectively grounded.

6.0 Solidly grounded system

The neutral is connected to ground without any explicit external element like resistor or reactor.

6.1 Advantages of solidly grounded system

(i) The substantial flow of ground fault current enables accurate detection and location of ground faults. The factor K_F (Eqn.1) is nearly 1 and hence transient overvoltage is minimum. Also, the neutral shift during ground fault is markedly less (almost one third) compared to ungrounded system [1].

(ii) The ground fault relay (51N) connected in residual circuit offers sensitive protection (Fig 5) for feeders. A separate CBCT is not required for ground fault detection. The ground fault relay with range of 20% to 80% is adequate. Since ground fault currents are high, higher setting (say 80%) is recommended

especially if CT ratio is lower. Further discussions on this will be taken up in a subsequent article.

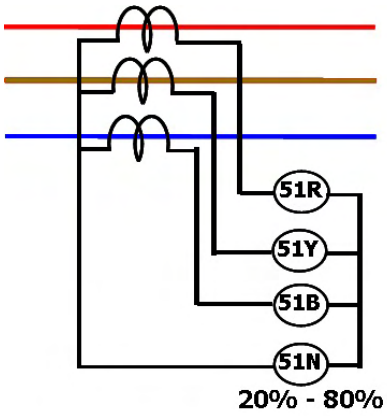

Fig 5 Ground relay Residual connection

(iii) Lightning arrestor rated for 80% can be used. For example, in a 132 kV system LA rated for 106 kV will suffice.

(iv) The over voltage factor for PT can be 1.5 pu (instead of 1.9 pu)

(v) Earthed grade cables can be used.

6.2 Disadvantages of solidly grounded system

(i) It permits flow of zero sequence currents. Third harmonic and multiples of third harmonic currents are zero sequence currents [6]. Every generator produces certain (minimum) amount of third harmonic voltage. If the neutrals of generators on a common bus are solidly grounded, substantial third harmonic currents can circulate between generators resulting in increased heating. In this case, neutral of only one generator is grounded and neutrals of other generators are kept ungrounded.

(ii) Since the ground fault current magnitude is high, the core damage at the point of fault in rotating machines like generator and motor will be high. To limit the damage to the core, manufacturers allow only a limited ground fault current. This information is usually provided in 'core damage curves' supplied by manufacturer. A typical core damage curve is shown in Fig 6. For example, ground fault current upto 25A is tolerated for 1 sec. This curve is used as a guide when selecting NGR and setting stator earth fault relays in generator protection.

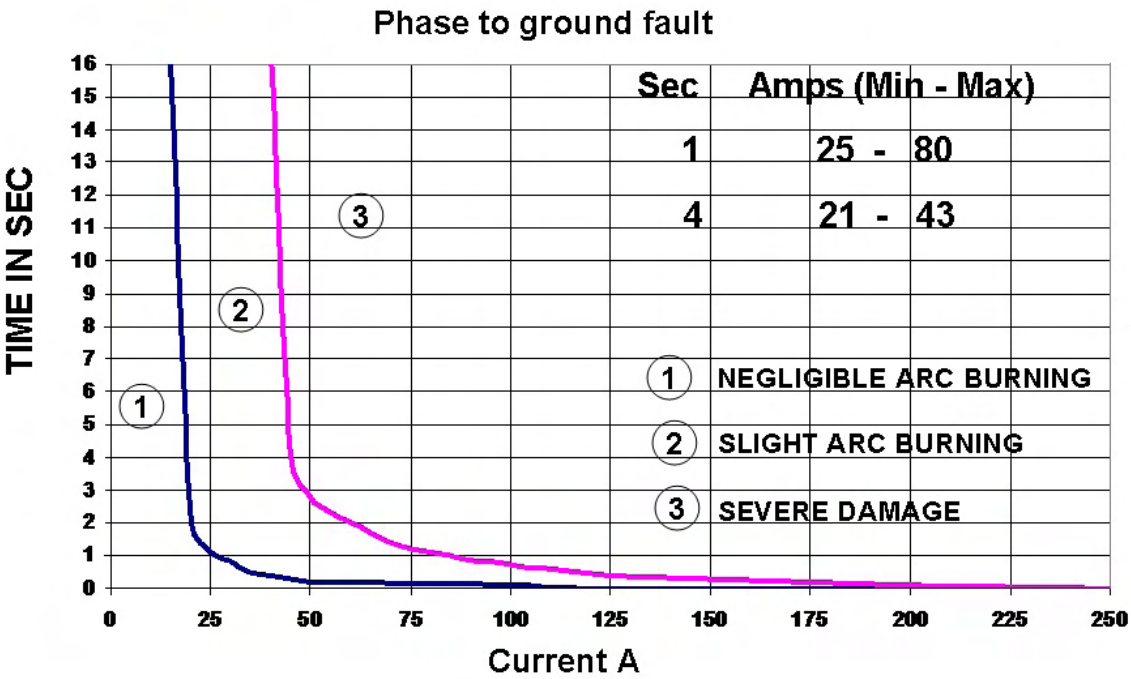

Fig 6 Generator - Core damage curve

(iii) Winding damages in rotating machines are not of serious concern. The repairs can be done by local rewinding agency. However in case of damage to core, repairs can not be carried out at site. The machine has to be sent back to manufacturer's works for repair resulting in prolonged loss of production.

Since rotating machines are not present in voltage levels from 22 kV and above, usually these systems are solidly grounded. At EHV level solid grounding is universally adopted for two reasons: (a) cost of insulation at EHV level is high (b) primary protections clear the fault within 5 cycles.

If rotating machines are present at 3.3 kV, 6.6 kV and 11 kV levels, the systems are grounded through resistor or reactor to limit the ground fault current. If rotating machines are not present at these voltage levels, the systems are solidly grounded.

In case of LT (415V) system, though rotating machines are present, the system is solidly grounded to conform to IE rules. Since LT system is also handled by 'general public', for safety reasons solid grounding is mandated [3]. Sufficient ground fault current is allowed to flow so that protective devices can operate and clear the faults at the earliest. Of course, core damage at the point of fault in rotating machines will be high.

Since a very large number of rotating machines (upto 175 kW) are present at LT level, it may be worth considering resistance grounded system even at this level to limit the ground fault current. LT buses can be segregated into those supplying rotating machines with resistance grounding and those supplying static loads like lighting and heaters with solid grounding. Refer Fig 7. The scheme shall be implemented in a controlled environment like power plant or industrial plant manned by professionals. Special application shall be made to the local electrical inspector who will review and approve the scheme in these cases.

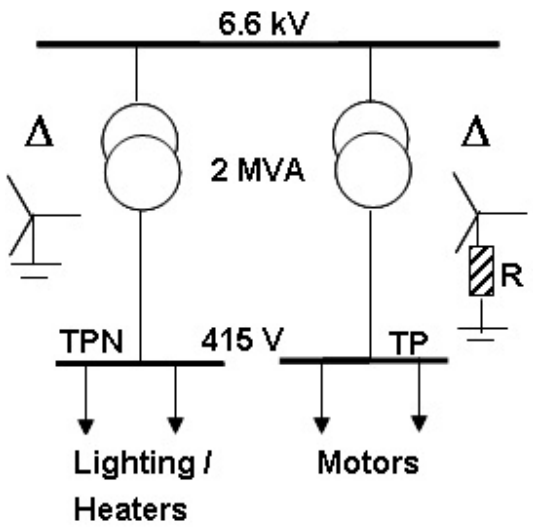

Fig 7 LT distribution

7.0 Resistance grounded system

A resistor is connected between the neutral and ground. The reasons for limiting the ground fault current are as follows:

(i) In rotating machines, winding damage is tolerable but core damage is not.

(ii) Reduce burning and melting in electrical equipment

(iii) Reduce mechanical stresses ($F \alpha I^2$) compared to solidly grounded system

(iv) Reduce restrike / arcing faults compared to ungrounded system

Depending on the value of limiting fault current, it is further classified as high resistance grounding and low resistance grounding.

7.1 High resistance grounded system

In High Resistance Grounded system, the ground fault current (I_F) is limited to about 10A to 15A. The value of resistor is selected such that for a ground fault, current

through resistor I_{NR} is equal to total system capacitive current I_C (Fig 8, Fig 14). Consider a 11 kV system. Let the ground fault current be limited to 10A. The value of NGR(Neutral Grounding Resistor) is approximately given by:

$$R_G \cong \frac{\left(\frac{11000}{\sqrt{3}}\right)}{10}$$
$$= 635\ \Omega$$

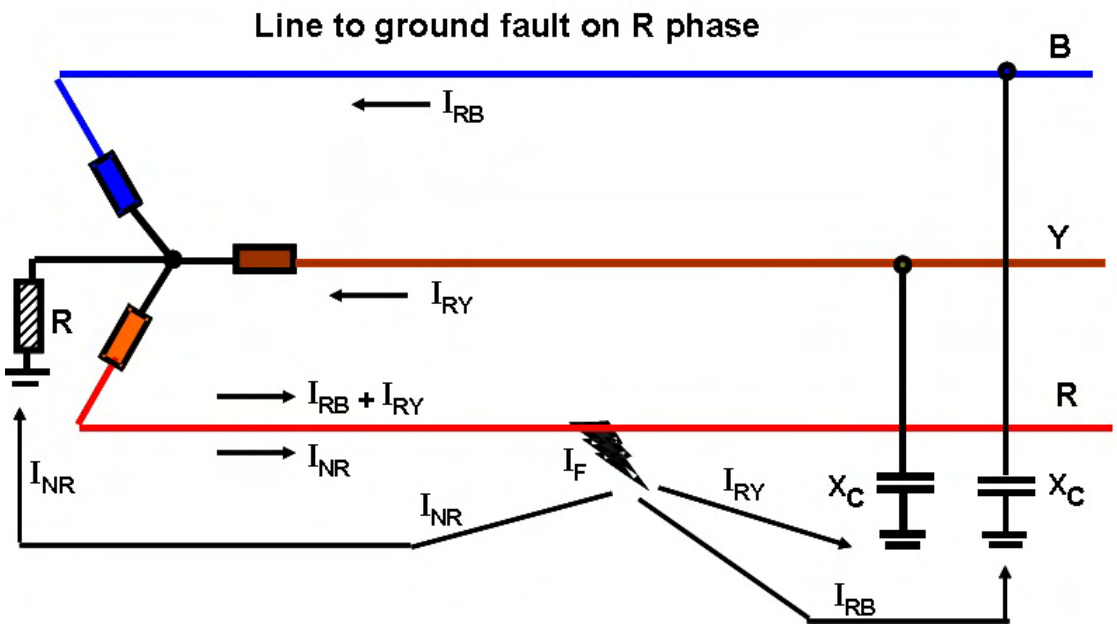

Fig 8 Resistance grounded system

7.1.1 Neutral Grounding Transformer (NGT)

One method for achieving the above is to connect a 635 Ω resistor directly in the neutral circuit. But a more economical solution is to connect the resistor across the NGT. This uses the elementary fact that an impedance Z connected to the secondary side of transformer gets reflected as T_R^2Z on primary side where T_R is the turns ratio. Refer Fig 9 for illustration. The primary current in both alternatives is same (0.3A).

The scheme with NGT is shown in Fig 10. The voltage ratio of NGT is chosen as

$$\frac{\left(11000/\sqrt{3}\right)}{240}$$

Turns ratio of NGT, $T_R = \dfrac{\left(11000/\sqrt{3}\right)}{240}$

$= 26.5$

Value of resistor on the LV side, $R'_G = \dfrac{635}{(26.5)^2}$

$= 0.9\ \Omega$

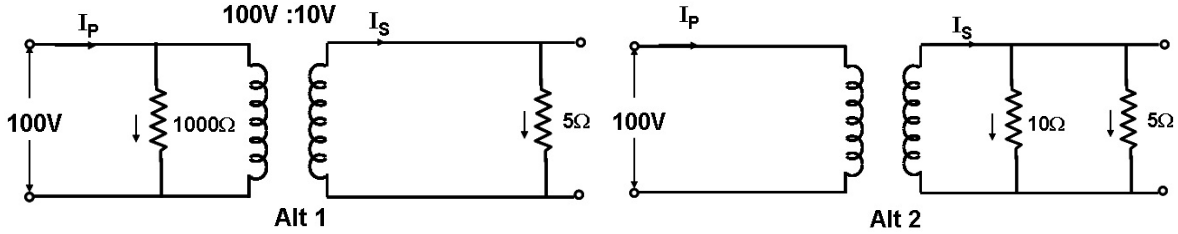

Fig 9 Concept of reflected impedance

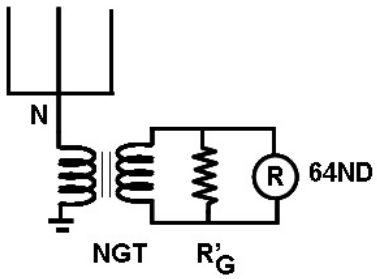

Fig 10 Resistor connected to NGT

The use of low resistance low voltage resistor results in economical design. A voltage relay (Neutral Displacement Relay) is connected across the resistor to detect ground faults.

The ground fault relay on feeders can not be connected in residual circuit (Fig 5) as the fault current magnitude is very less (say 10A) compared to rated current of a feeder (say 800A). Here, reliable ground fault protection can not be achieved by connecting the relay in residual circuit as in Fig 5. Assuming the CT ratio of 800/1 and minimum setting of 10% for ground relay (51N), the pick up is 80A which is much higher than the fault current of 10A. In this case, a separate CBCT is required for ground fault detection (Fig 11). A very sensitive earth fault relay (e.g. RXIG, CTUM15) is connected to CBCT. Primary earth fault current as low as 2A can be detected.

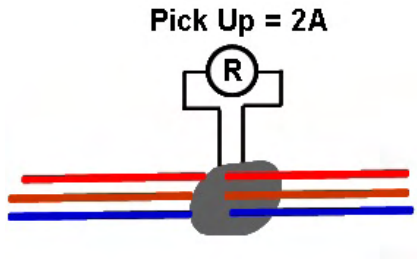

Fig 11 CBCT Connection

More detailed discussions on NGT sizing, CBCT and pitfalls in NGR enclosure earthing will be covered in future articles.

7.2 Low resistance grounded system

In low resistance grounded system, the ground fault current is limited to about 400A. Another widely used criteria is to limit the fault current to rated current of source generator or transformer.

On a 11kV system, with ground fault current limited to 400A, value of NGR is approximately given by:

$$R_G \cong \frac{\left(11000/\sqrt{3}\right)}{400}$$

$$= 16\ \Omega$$

The resistor is directly connected between neutral and ground (Fig 12).

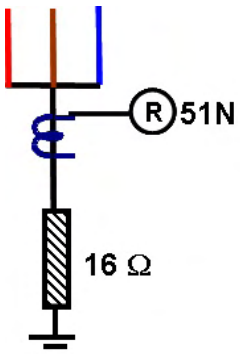

Fig 12 Low Resistance Grounded system

Current relay in neutral circuit is possible as ground fault current is not too low. Compared to high resistance grounded system, the core damage at the faulted location will be more.

Ground relay connected in residual circuit, as in Fig 5, can be used for feeder protection. The ground fault relay with range of 10% to 40% is adequate.

7.3 Comparison between ungrounded and grounded systems

Refer Table 2.

Table-2

Parameter	Ungrounded	High Resistance Grounded	Low Resistance Grounded	Solidly Grounded
$I_{1-\Phi} / I_{3-\Phi}$	< 0.5%	< 1%	5% to 20%	> 60%
Transient overvoltage	3 to 6 pu	Not more than 1.5 to 2.5 pu		
Arrestor rating	100%			80%
PT voltage factor	190% for 8 hours			150% for 30 Sec
Fault location	No	Perhaps	Yes	
Immediate disconnection after ground fault	No	Optional	Yes	
Expected repair (winding) after ground fault	New winding insulation			
Expected repair (core) after ground fault	NIL		Perhaps Core Stacking	Core Stacking
Multiple faults	Often	Seldom		

8.0 Reactance grounded system

Here, a reactor is connected between neutral and ground. This type of grounding is also termed as 'resonant grounding'. The reactor is called 'Peterson coil'. The value of reactor is selected such that, for a ground fault, current through reactor I_{NX} is equal to total system capacitive current I_C (Fig 13, 14). From [1],

$I_F = I_{RB} + I_{RY} = 3 / X_C$

$I_{NX} = 1 / X_L$

$1 / X_L = 3 / X_C$

$X_L = X_C / 3$

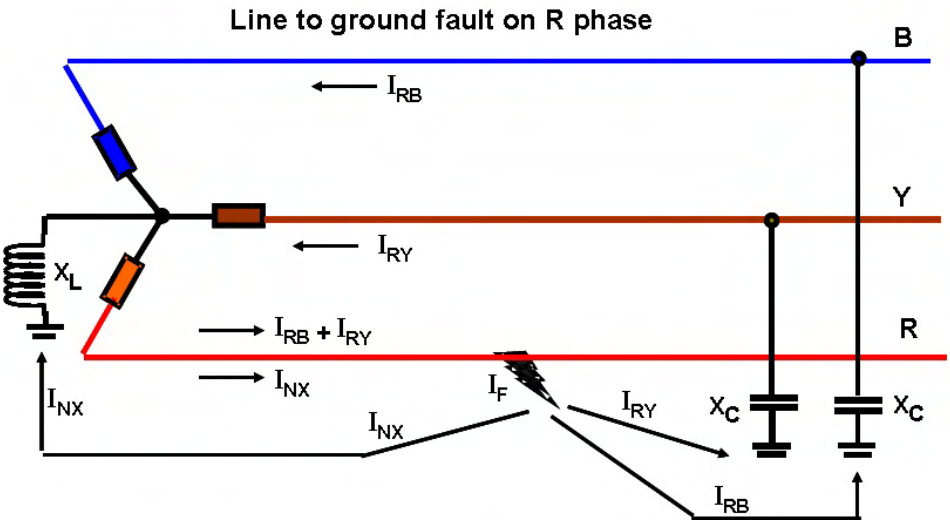

Fig 13 Reactance grounded system

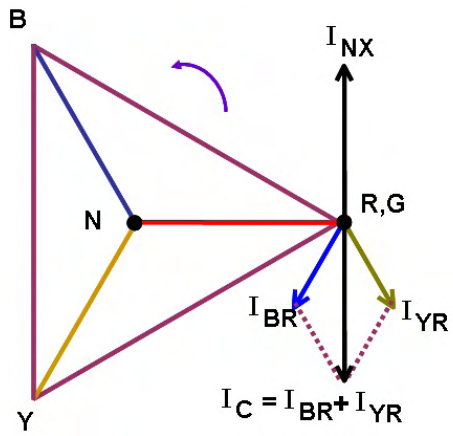

Fig 14 Phasor diagram

Consider a typical value of 2A per phase for charging current in a 11 kV system.

$$X_C = \frac{\left(11000/\sqrt{3}\right)}{2}$$

$$= 3175\ \Omega$$

$$X_L = \frac{3175}{3}$$

$$= 1058\ \Omega$$

K factor of reactor (X_L / R) ≅ 20

8.1 Advantages of reactance grounded system

The current through the reactor I_{NX} almost nullifies capacitive current I_C in case of a ground fault. The fault current is practically zero. Hence the possibility of restrike is remote as the arc is self-extinguishing.

Substantial zero sequence voltage (V_0) is available for fault detection through open delta PT.

8.2 Disadvantages of reactance grounded system

(i) Neutral has to be fully insulated.

(ii) Lightning arrestor has to be rated for 100%.

(iii) The over voltage factor for PT shall be 1.9 pu.

(iv) The cables have to be rated for full line voltage (UE grade).

(v) The system capacitance will change due to operational procedures when some feeder cables are taken in service or out of service. The reactor has to be tuned to match the system capacitance. This is a time consuming task in a running plant. If the reactor taps are left untouched even when system capacitance has changed (due to network switching), the main purpose of 'resonant grounding' is not realized.

(vi) In rotating machines, core damage is perceptible only if the ground fault current exceeds 10A. Hence reducing the ground fault current to practically nil does not enhance further the core damage withstand performance.

In modern system design, reactance grounding is rarely used. Either the system is ungrounded, (low / high) resistance grounded or solidly grounded.

9.0 Grounding the bus

To establish grounding in ungrounded system, the two widely used methods are zig-zag grounding and star-delta grounding [3]. Open delta grounding is a sub set of star-delta grounding.

9.1 Zig-Zag grounding transformer

It works on the basic premise that the per unit current must be equal in primary and secondary windings. The exciting current is ignored here which for a transformer is less than 1%. Consider a single phase transformer with turns-ratio of 10 (Fig 15). Assume 500A is flowing on primary side.

I_{PRI} = 500A; I_{SEC} = 500 / 10 = 50A

I_{PRI}^{RAT} = 1000A; I_{SEC}^{RAT} = 100 A

I_{PRI}^{PU} = 500/1000 = 0.5 pu

I_{SEC}^{PU} = 50/100 = 0.5 pu

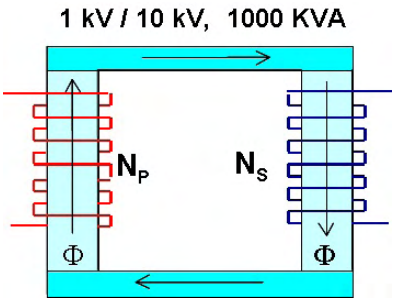

Fig 15 Single phase transformer

The per unit currents on primary side and secondary side are equal. In case of three phase transformer, the per unit currents, both in magnitude and angle, on primary side and secondary side must be equal. If the per unit current on primary side is 0.6∠120°, the per unit current on secondary side shall also be 0.6∠120°. This reiterates the instantaneous Ampere-Turns Balance principle of transformer.

The Zig-Zag winding connection is shown in Fig 16.

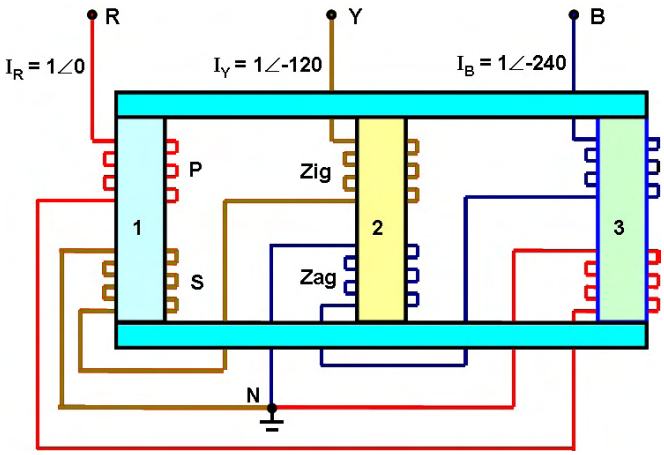

Fig 16 Zig – Zag grounding transformer

Each limb carries two windings, akin to primary and secondary. The windings are connected such that primary (zig winding) carries current of one phase and secondary (zag winding) carries current of different phase. Under this condition, assume the windings carry positive sequence current. It follows that, for example on limb 1, the current in zig winding is 1∠0° and the current in zag winding is 1∠-120°. But this violates the fundament principle of transformer operation. The transformer

offers a very high impedance to the flow of positive sequence (or negative sequence) currents. If the zig-zag transformer is connected to a bus, under normal conditions, the current drawn is very low corresponding to exciting current.

The scene when zero sequence currents are flowing is shown in Fig 17. The three line currents (I_O) are equal in magnitude and phase. The current in Zig winding is, say $1\angle 0°$ and the current in zag winding is also $1\angle 0°$. This is permissible as per the fundamental principle of transformer theory stated above. The transformer offers low impedance to the flow of zero sequence current corresponding to conventional leakage impedance. Thus, this connection facilitates the flow of ground fault current ($3I_O$) in ungrounded system. The ground fault current magnitude can be limited by inserting resistor as shown.

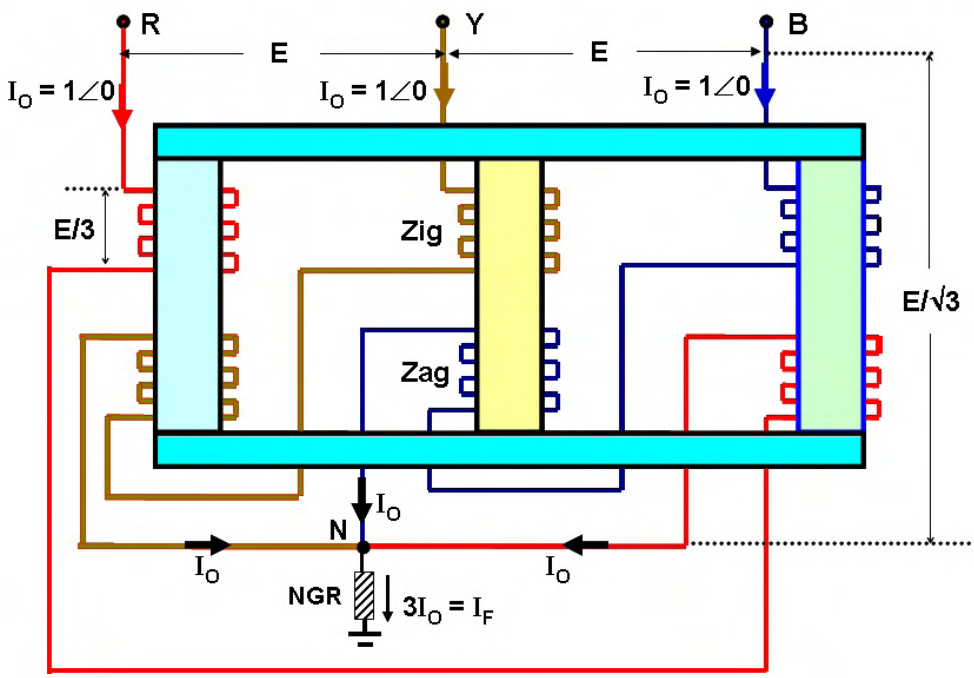

Fig 17 Zero Sequence current flow

9.1.1 Phasor diagram

The phasor diagram is shown in Fig 18.

Line voltage = E

Voltage across each winding = E/3

Voltage to neutral = E/√3

Current in each winding = $I_0 = I_F/3$

Rating of grounding transformer = $\sqrt{3}\, E\, I_0 = (E/\sqrt{3})\, I_F$

The zero sequence leakage reactance (Z_0) is expressed on the above base MVA. In conventional transformer the leakage reactance is about 10%. But for grounding transformer, the leakage reactance can be specified even upto 100%. This is possible as it does not carry normal load current. The desired ground fault current can be achieved by specifying Z_0 and NGR (if required). For more details refer [4]. The grounding transformer is rated generally for 10 seconds. Hence its cost is very less (10% to 15%) compared to a conventional transformer of same rating [5].

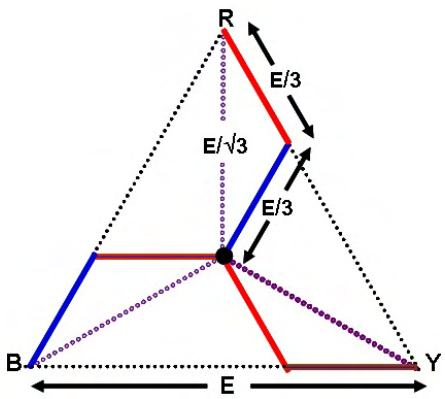

Fig 18 Phasor diagram

9.1.2 Current distribution for ground fault

Typical current distribution for ground fault is shown in Fig. 19.

Ground fault current $I_F = 3I_0$

$$= \frac{\left(6600/\sqrt{3}\right)}{250}$$

$$= 15.3\ A$$

Turns ratio TR = $\dfrac{6600}{\left(415/\sqrt{3}\right)}$

$$= 27.5$$

Current on star side = $I_0 \times TR$

$$= 5.1 \times 27.5$$

$$= 141\ A$$

For further insights on this topic, refer [6].

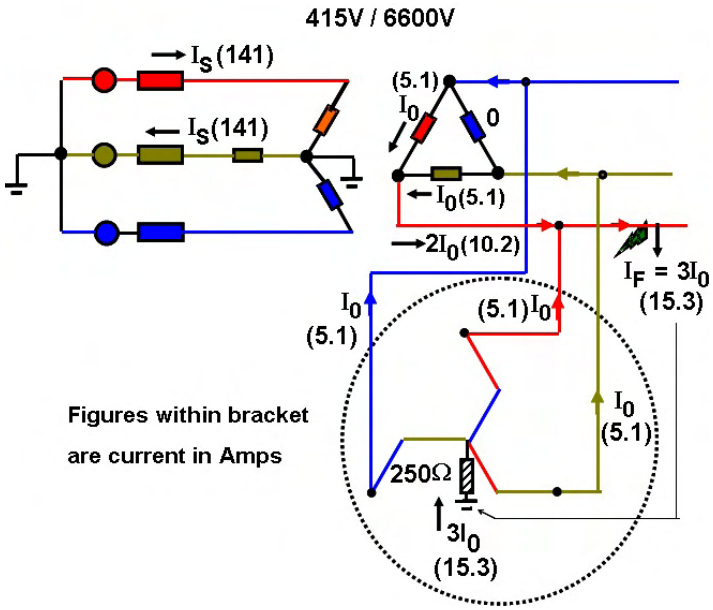

Fig 19 Typical current distribution

9.2 Star-Delta transformer

A conventional star-delta transformer can be used for grounding the bus, refer Fig 20.

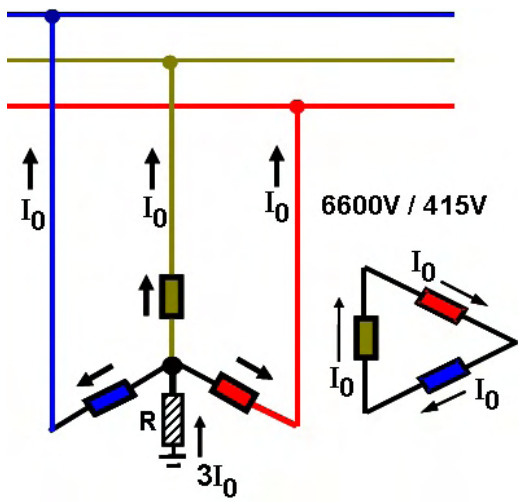

Fig 20 Star – Delta transformer

Though zig-zag transformer will be preferred due to its lower cost, star-delta transformer can be used if a spare one is available. Under normal conditions, the transformer draws only the exciting current which is less than 1%. But for ground fault current it offers low impedance corresponding to zero sequence leakage reactance. I_0 flows in star winding and equivalent I_0 circulates in delta satisfying the Ampere-turn balance requirement for transformer operation. *This connection (star –*

delta) needs to be employed with caution as sometimes it leads to inadvertent grounding [6].

The ground fault current can be limited to any desired value by providing the resistor. The resistor can be connected in two ways – connected in primary neutral circuit or delta winding.

9.2.1 Resistor in primary neutral

Let the rated voltage of bus be 6.6 kV and the resistor value be 250 Ω. Refer Fig 20.

Ground fault current $I_F = 3I_0$

$$= \frac{\left(6600/\sqrt{3}\right)}{250}$$

$$= 15.3\ A$$

$I_0 = 5.1A$

9.2.2 Resistor on delta winding

Refer Fig 21.

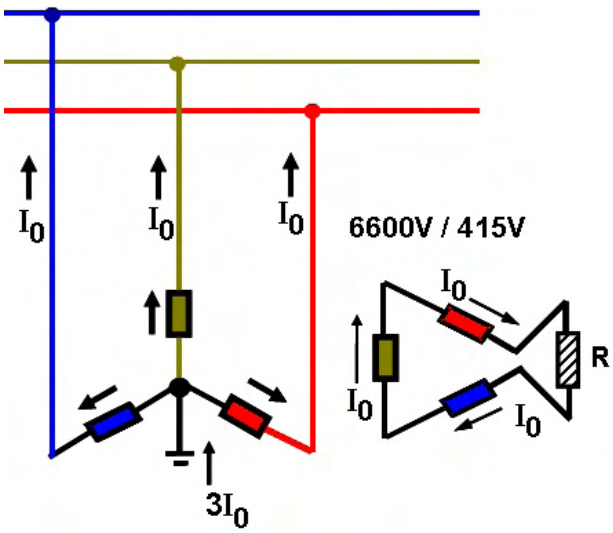

Fig 21 Resistor on delta side

The required I_0 on star side is 5.1A.

$$\text{Turns Ratio TR} = \frac{\left(6600/\sqrt{3}\right)}{415}$$

$$= 9.18$$

I_0 *on delta side* $= 5.1 \times 9.18$

$$= 46.8\ A$$

Resistance on delta side $= \frac{(3x415)}{46.8}$

$= 26.6\ \Omega$

In general, $R_S = \frac{(R_D\ x\ TR^2)}{9}$ **……..(2)**

R_S : Resistor value on star neutral in ohms

R_D : Resistor value on delta side in ohms

TR : Turns Ratio = $\frac{V_{STAR}^{PHASE}}{V_{DELTA}^{PHASE}}$

Even though the primary neutral is solidly grounded, the system behaves like resistance grounded system because of the presence of resistor on the delta side. The star winding in this case has to be rated for full line voltage [3].

9.3 Open Delta PT grounding

Conceptually it is same as star – delta grounding. Open delta PT is used to detect ground faults in ungrounded system [7]. A Ferro-resonance damping resistor, (typically 100Ω) is connected across the relay. Refer Fig 22.

From Eqn (2),

$R_D = 100\Omega$

$$TR = \frac{\left(6600/\sqrt{3}\right)}{\left(110/3\right)}$$

$= 103.9$

$$R_S = \frac{(R_D\ x\ TR^2)}{9}$$

$= 120\ k\Omega$

$$I_F = \frac{\left(6600/\sqrt{3}\right)}{R_S}$$

$= 32\ mA$

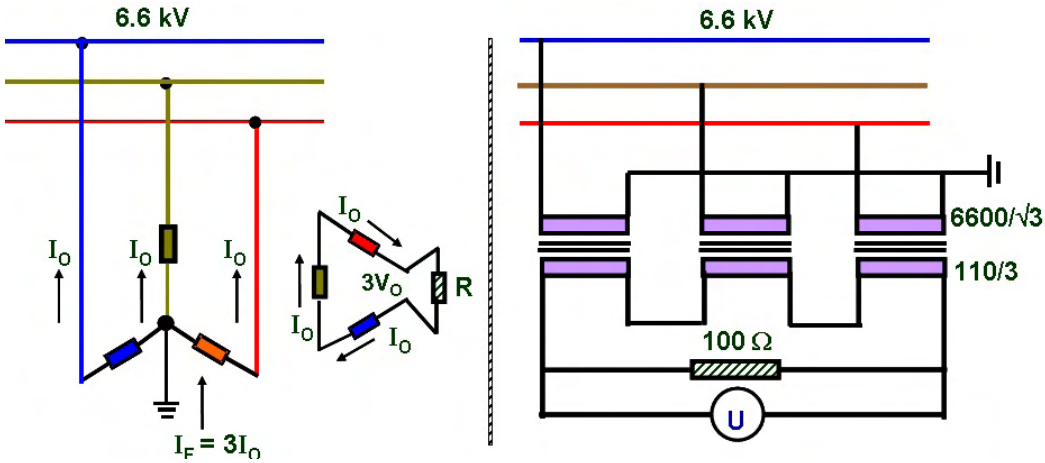

Fig 22 Open Delta PT with Resistor

An ideal ungrounded system is converted to a very high resistance grounded system with fault current limited to a very small value.

10.0 Variation of voltage with fault current

Depending on type of grounding, the phase and line voltages change under ground fault condition. Line voltage triangle is isosceles for solidly grounded system and equilateral for ungrounded system [1]. Refer Fig 23.

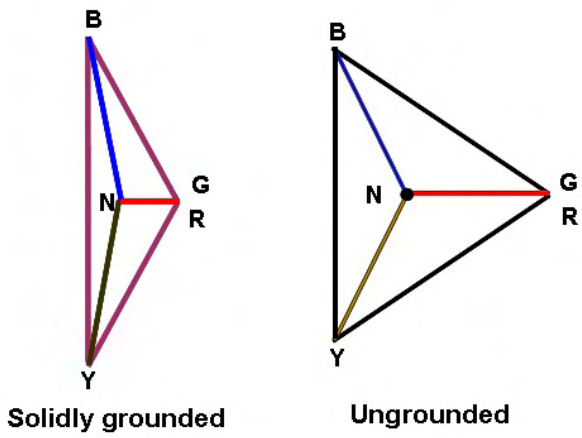

Fig 23 Phasor Diagram

Under faulted condition, phase voltage and line voltage for unfaulted phases are equal. For fault on phase R,

$V_{YG} = V_{YR}$; $V_{BG} = V_{BR}$

By varying the value of NGR from zero to a very high value, conditions corresponding to solidly grounded, low and high resistance grounded and ungrounded systems can be simulated. The results of the simulation studies are shown in Fig 24. The striking feature is that line and phase voltages of unfaulted phase remain almost equal to √3pu until the fault current reaches a high value corresponding to solidly grounded system. Only when the ground fault current reaches around 8500A, the line and phase voltages drop down to 1pu. The open delta voltage ($V\Delta = V_R + V_Y + V_B$) also exhibits a similar trend.

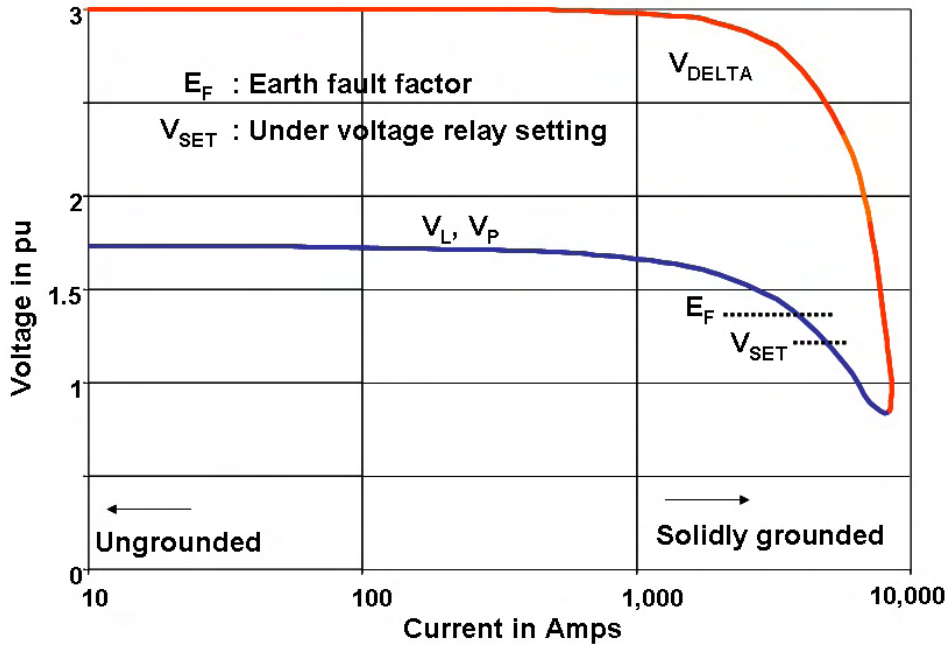

Fig 24 Variation of voltage with fault current

The following observations can be made:

(i) The voltage to ground of unfaulted phases remains at almost √3pu except for solidly grounded system. Consider a non-solidly grounded system. Let a ground fault occur on one of the cables from the switchgear. Not only the faulted cable but all the other cables connected to the switchgear will also experience overvoltage until the fault is cleared. The connected equipment on the cable network like transformer and motor also experience high voltage during ground faults. Thus there is a cumulative stress on insulation of all the equipment after a ground fault.

(ii) Under-voltage relays are used for protection purpose. Assume the under-voltage relay is connected *across the line* and set at 70%. The line voltages remain almost at √3pu except for solidly grounded system (Fig 24). The relay will not pick up until the line voltage falls below say 70% of √3pu, i.e., V_{SET} = 1.2 pu. Thus line connected under voltage relays may not operate if used in non-solidly grounded system during ground faults. The preferred solution is to connect three under voltage relays between phase and ground. This confirms a well known fact that the best handle to detect voltage unbalance is the phase voltage and not the line voltage or open delta voltage [6].

11.0 Sequence voltage vs Fault location

Refer Fig 25. The positive sequence voltage is high (say 11kV/√3 pu) at the source. The synchronous machines (source) are designed to produce only positive sequence voltage. At the point of fault the positive sequence voltage is low (almost zero) and the under voltage relays near the faulted location respond [8].

The zero sequence voltage is low at the source. Every effort is made in the alternator design (like fractional-pitch winding) to reduce zero sequence voltage (like third harmonic) to a minimum. At the point of fault the zero sequence voltage is substantial (say 11kV/√3pu) and the voltage relay near the faulted location connected to open delta PT responds.

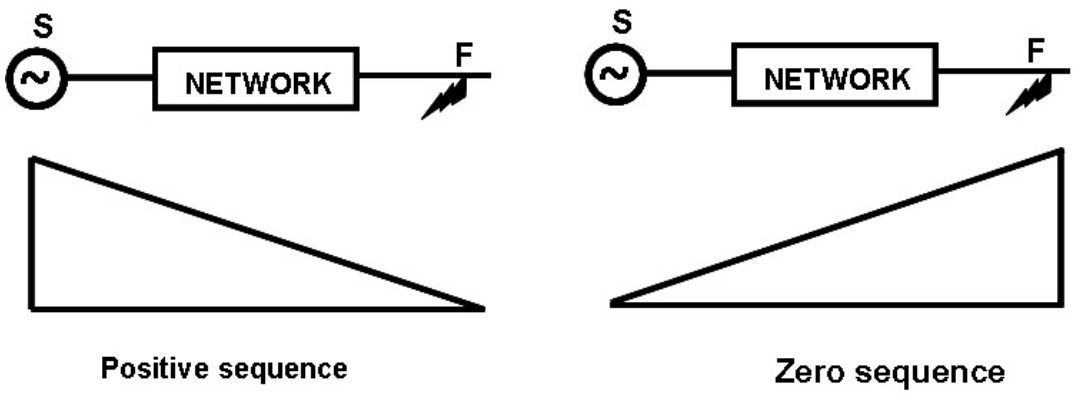

Fig 25 Sequence voltage vs Fault location

12.0 Peculiar ground fault current distributions

Sometimes unexpected ground fault current distributions result due to network configuration and impedances of elements. Two of the interesting case studies [8] are given below.

12.1 No transformer neutral current with ground fault

Consider an autotransformer rated for 132kV / 220 kV with 11kV tertiary. Refer Fig 26. 132 kV side is connected to source and 220 kV side is connected to load.

The impedance values of transformer are:

Z_{HM} = 9.5% ; Z_{MT} = 47.4% ; Z_{HT} = 31% on 37.5 MVA base.

Assume the transformer is on no load initially. The current distribution for ground fault on 220 kV side is shown in Fig 26. The current through the transformer neutral is almost zero. The ground fault, instead of returning to transformer neutral bypasses the transformer and returns to source neutral. The earth fault relay on transformer neutral will not pick up but on the source neutral will pick up. Of course, this is possible only because the load side is connected to the source side electrically. With conventional transformer this can not happen as load side and source side are galvanically separated.

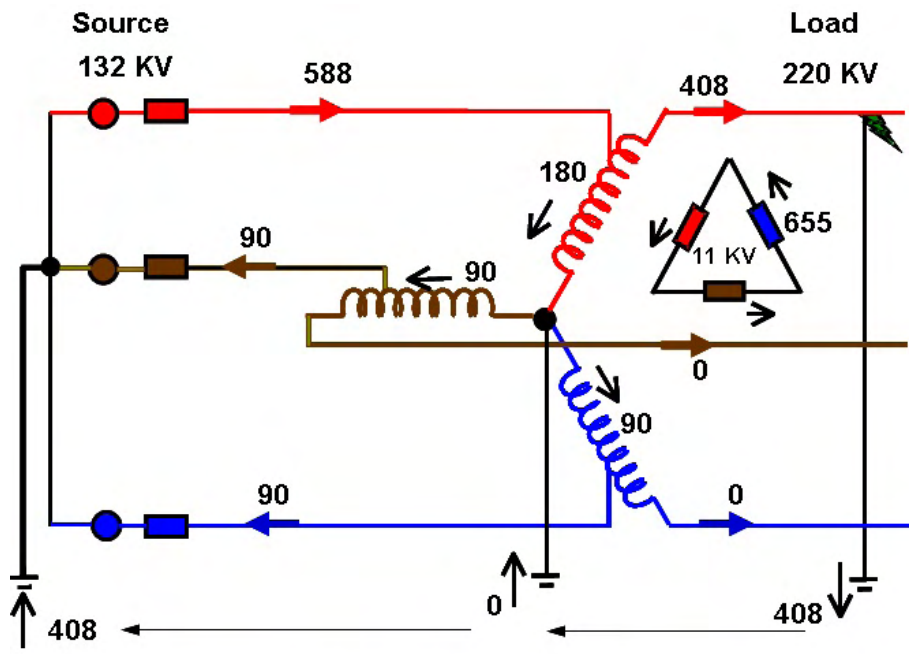

All currents in Amps

Fig 26 Fault current distribution in Auto-transformer

12.2 Transformer neutral current without ground fault

Consider a 33 kV / 11 kV, star – delta transformer. Under balanced loading condition, the current on 33 kV side is 500A as shown in Fig 27. The current distribution for open conductor on 'R' phase is shown in the same figure. It appears as if 'R' phase current now tries to flow through the earth. If neutral CT ratio is 500/1 and plug setting is 0.5,

$$Plug\ Setting\ Multiplier = \frac{640}{(500 x 0.5)}$$

$$= 2.56$$

Since PSM is above 2, the ground fault relay (51N) will pick up and operate as per set time dial. Thus without a genuine ground fault, ground fault relay will operate.

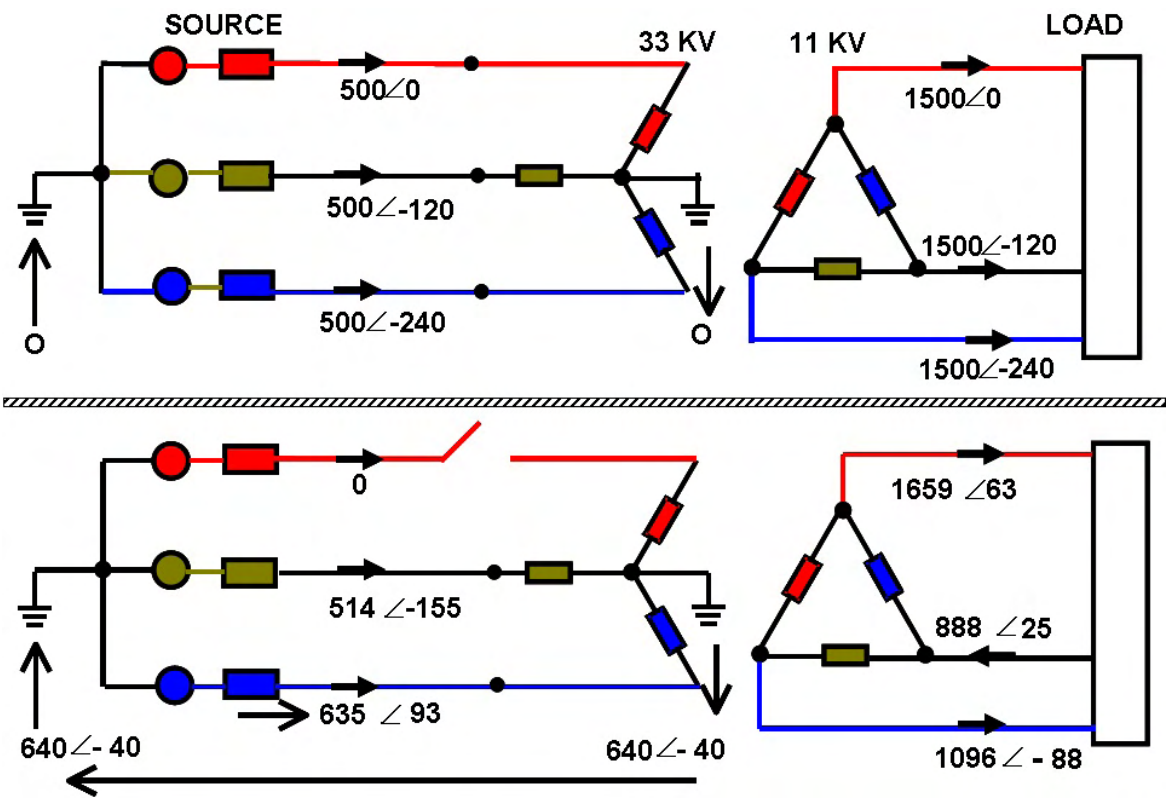

Fig 27 Current distribution for open conductor fault

13.0 Conclusion

The reasons for adopting different grounding methods at various voltage levels were discussed. The definition for effectiveness of grounding was introduced. The importance of 'core damage curve' for rotating machines with respect to neutral

grounding was brought out. The basic features of resistance grounding and resonant grounding were given. Different methods to ground an ungrounded system were analyzed in detail. Critical remarks on over voltage problems in non-solidly grounded systems were made. The practicing engineer is encouraged to apply the concepts of grounding illustrated with examples in this two part serial. A similar exercise to present a coherent approach to 'earthing' was made in references [9,10]. Understanding 'earthing' and 'grounding' will go a long way to explain many of the so called mal-operations reported at site.

14.0 References

[1] "Grounding of Electrical system – Part I", K Rajamani, IEEMA Journal, May 2006, pp 52 – 56.

[2] ANSI / IEEE STD 142: IEEE recommended practice for grounding of industrial and commercial power systems (Green book).

[3] J & P Transformer book: A C Franklin & D P Franklin.

[4] "Grounding transformer specification without ambiguity", K Rajamani, IEEMA Journal, Aug 2001, pp 52 – 54.

[5] Electrical transmission and distribution reference book: Westinghouse Electric Corporation

[6] "Peculiarities of delta connection in electrical power systems", K Rajamani, IEEMA Journal, Dec 2003, pp 38 – 42

[7] Protective Relaying – Principles & Applications: J Lewis Blackburn, Marcel Dekker Pub.

[8] Symmetrical components for power system engineering: J Lewis Blackburn, Marcel Dekker Pub.

[9] "Earthing of Electrical system – Part I", K Rajamani, IEEMA Journal, Aug 2004, pp 37 – 40.

[10] "Earthing of Electrical system – Part II", K Rajamani, IEEMA Journal, May 2005, pp 32 – 36.

ieema journal

Generator Neutral Grounding Practices

Dr K Rajamani and Bina Mitra,

Reliance Infrastructure Ltd, MUMBAI

(August 2007, IEEMA Journal, Page 89 to 97)

ieema journal

Generator Neutral Grounding Practices

Dr K Rajamani and Bina Mitra, Reliance Infrastructure Ltd., Mumbai

1.0 Introduction

In this article, various methods of grounding are described with their impact on zero sequence current circulation and core damage in rotating equipment. The grounding methods for LV and MV generators are elaborated. The principles of high and low resistance grounding are discussed leading to sizing of NGT and NGR. The novel hybrid grounding concept is introduced. The dangers of mixing up incompatible grounding systems are brought out. The article ends with critical analysis of NGR enclosure earthing.

2.0 Harmonic and Zero sequence

The theory of symmetrical components defines three components for three phase system:

I_{POS} : Positive sequence – (e.g. $1\angle 0°$, $1\angle -120°$, $1\angle -240°$)

I_{NEG} : Negative sequence – (e.g. $1\angle 0°$, $1\angle 120°$, $1\angle 240°$)

I_{ZER} : Zero sequence – (e.g. $1\angle 0°$, $1\angle 0°$, $1\angle 0°$)

The relationship between harmonics and sequence component is discussed in Ref [1]. It can be readily recalled using the following table:

Table 1

Positive	Negative	Zero
1	2	3
4	5	6
7	8	9
10	11	12
13	14	15

For example, 5th harmonic is negative sequence and 10th harmonic (if even harmonics are present) is positive sequence. Multiples of 3rd harmonic (3, 9, 15,..) are zero sequence. Ref. Fig. 1.

In case of positive (or negative) sequence quantities, neutral grounding is *immaterial* as neutral current is zero. But for flow of zero sequence current, neutral connection to 'ground' must exist.

August 2007, IEEMA Journal, Page 89 to 97

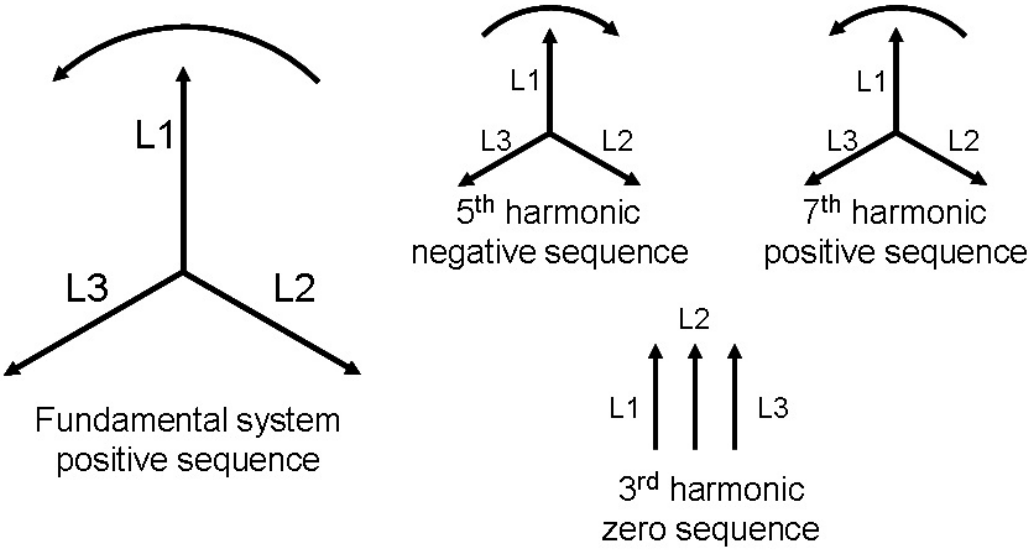

Fig 1 Harmonics and Sequence Components

3.0 Generators connected to a common bus

The scheme is shown in Fig 2.

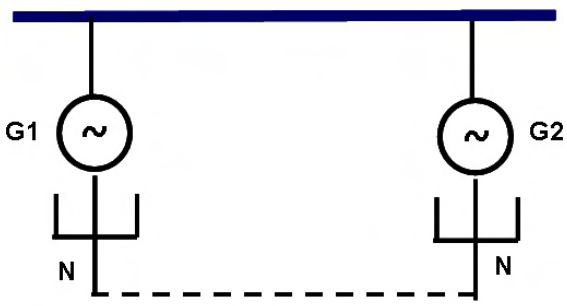

Fig 2 Generators connected to common bus

(i) Non-zero-sequence currents

The current flow is shown in Fig 3.

Non-zero-sequence currents (1,5,7,11,13…) flow between the machines *irrespective of neutrals grounded or not*. Fortunately the magnitudes of higher order harmonic (5,7,11..) voltages generated in alternators are very less and hence result in insignificant circulating currents (I_5, I_7 ...). .

In case of fundamental, the difference between internal emf of machines 1 and 2 leads to circulating reactive flow and bus voltage hunting. This typical problem

encountered in practice can be mitigated by proper choice of AVR droop setting for respective machines.

(ii) Zero-sequence currents

The alternators generate certain amount of third harmonic voltage. This leads to circulation of third harmonic currents among machines if the neutrals are tied together. (Though third harmonic voltage generated in alternators is not desirable, it is gainfully employed to detect earth faults in stator winding very near to neutral. It is called 100% stator earth fault protection.)

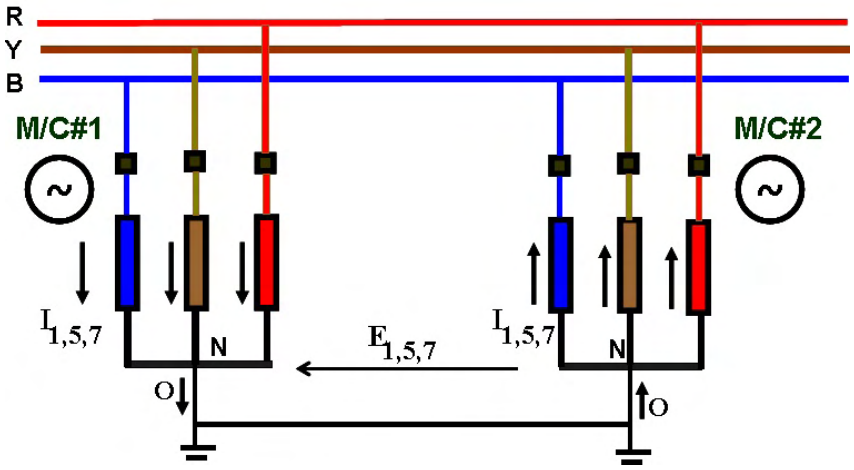

Fig 3 Flow of (+ve) or (-ve) sequence currents

4.0 NGR common to all the units

This method is widely used in DG plants (Fig 4).

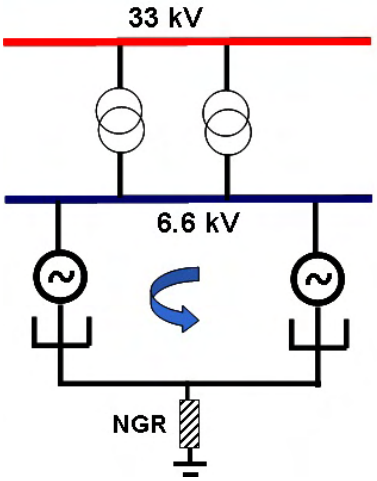

Fig 4 Common NGR

The ground fault current supplied by the plant is limited by common Neutral Grounding Resistor (NGR) and remains almost the same irrespective of number of units operating in parallel. This leads to simplified ground fault relaying. In this case ground relays with DMT characteristics are very suitable.

The disadvantage is the circulation of significant zero sequence current among machines as neutrals are connected with low / zero impedance (Fig 5).

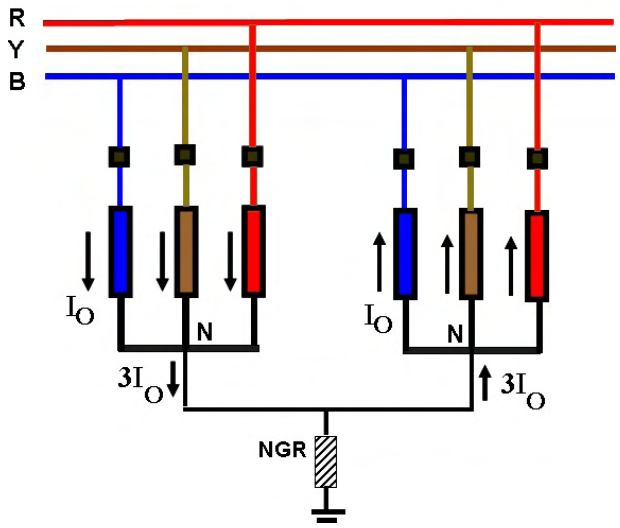

Fig 5 Zero Sequence Current Flow

5.0 Individual NGR for the units

(i) Generators on common bus (Fig 6)

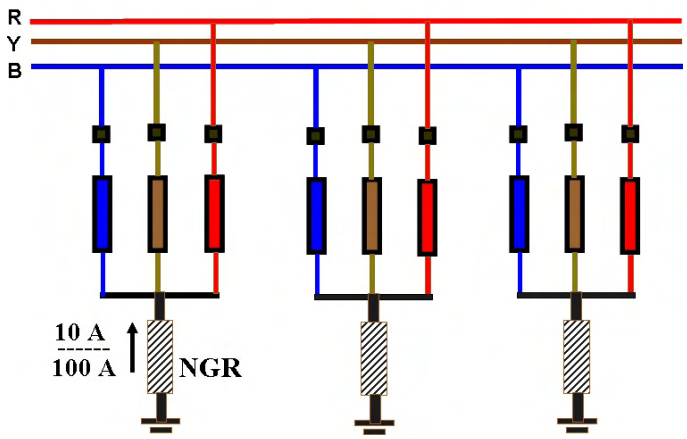

Fig 6 Generator on common bus with individual NGR

a) *High resistance grounded system*

The ground fault current is limited to within 10 – 15A. All NGRs can be in circuit. Third harmonic current between two machines encounters two NGRs of sufficiently high value. The resulting circulating current is very low.

b) *Low resistance grounded system*

The ground fault current is limited to say 100 A. Some prefer to keep only one NGR in circuit at any time. This requires switching device for neutral (neutral breaker / isolator). Some others prefer to keep all NGRs in circuit. If sensitive Restricted Earth Fault (REF) scheme is provided for each unit, the second alternative is preferred.

(ii) Generators with GTs (Fig 7).

In majority of power stations, this scheme is adopted. All NGRs are permanently in circuit. The ground fault current is limited to within 10A. The vector group of Generator Transformer is star – delta. Delta (on generator side) offers zero sequence isolation between individual generator and rest of the system. Third harmonic current circulation between two machines is not theoretically possible. Any stator earth fault protection provided on generator is inherently REF protection and does not need coordination with ground relays (51N) on system (220 kV) side.

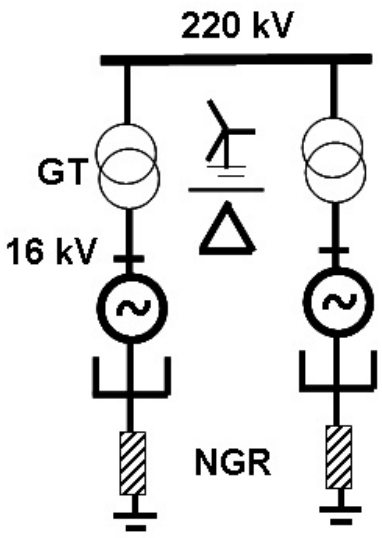

Fig 7 Generator with GT

6.0 Zig-Zag grounding transformer common to all the units

The scheme is shown in Fig 8. In some stations generator neutrals are kept floating and the bus is grounded through zig-zag grounding transformer. The neutral of zig-zag transformer is grounded through NGR. Operating principle of zig-zag grounding transformer is given in Ref [3]. As in Fig 4, in this case also, the ground fault current supplied by the plant remains almost the same irrespective of number of units operating in parallel. Unlike Fig 4, however, zero sequence (third harmonic) current circulation among machines is eliminated.

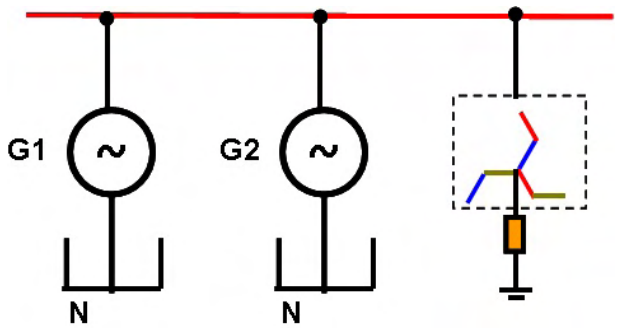

Fig 8 Zig-Zag Grounding

One practical case to illustrate evolution of this type of grounding is shown in Fig 9.

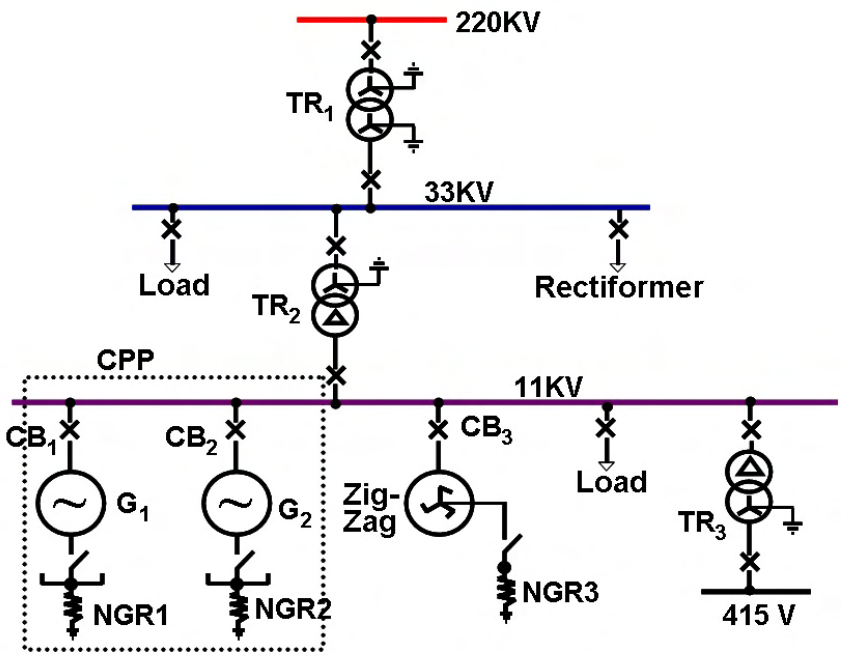

Fig 9 Evolution of Grounding

Before the Captive Power Plant was commissioned, the plant loads were fed by transformers TR_1, TR_2 and TR_3. Since 11kV system was ungrounded, zig-zag transformer was installed to ground the bus. After commissioning CPP, following procedure is adopted to bring the units on line:

(i) Run up generators G_1 and G_2 and synchronize using breakers CB_1 and CB_2.

(ii) Close NGR_1 and NGR_2.

(iii) To avoid multiple grounding, manually trip zig-zag transformer using CB_3.

During parallel operation if CPP units trip, manually close CB_3 to establish grounding. If the operator fails to close CB_3 the 11kV system remains ungrounded. To obviate human error, CB_3 is kept always closed and NGR_1 and NGR_2 are permanently kept off.

7.0 LV generators grounding

415V generators are mostly solidly grounded. To prevent circulation of third harmonic current among the machines, the neutral of only one generator is grounded (Fig 10). This offers return path for ground fault current. The neutral isolating device can be a switch, contactor or breaker. The switch has to be manually opened or closed. The contactor or breaker can be remotely opened or closed through control logic depending on the neutral of which machine is to be grounded.

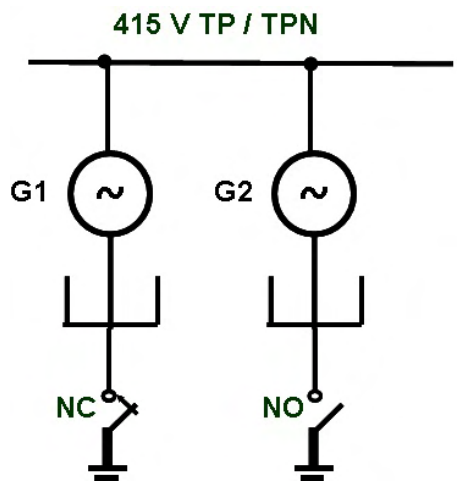

Fig 10 LT Generators Grounding

In case of TPN distribution, zero sequence current circulation can be significant even if neutral of only one generator is grounded (Fig 11). A separate neutral contactor instead of neutral link is to be provided on the bus side for isolation.

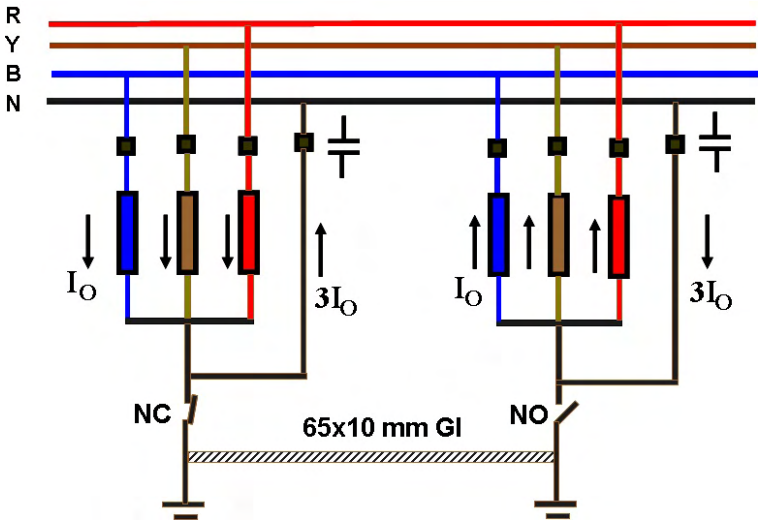

Fig 11 LT System Grounding (TPN)

If earthing connection is not proper, even if neutral of only one generator is grounded in TP system, zero sequence current circulation can be significant (Fig 12).

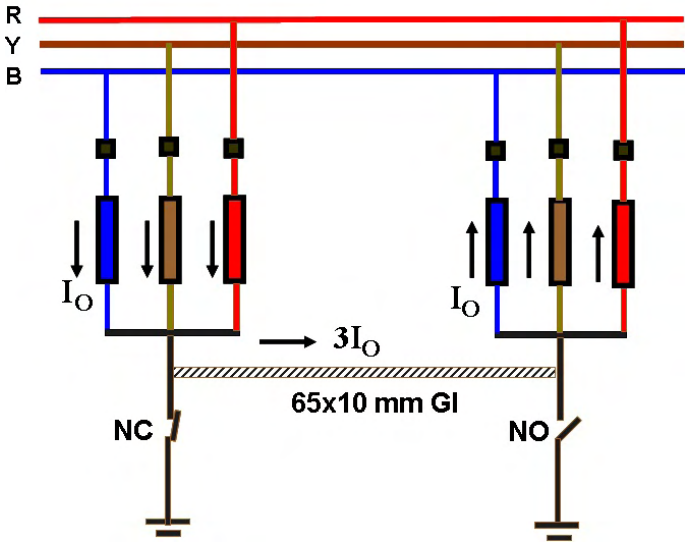

Fig 12 LT System Grounding (TP)

The connection arrangement from generator neutral to isolator and isolator to station grounding grid has to be physically verified to avoid this type of site problem.

8.0 MV generators grounding

Winding damages in rotating machines are not of serious concern. The repairs can be done by local rewinding agency. However in case of damage to core, repairs can not be carried out at site. The machine has to be sent back to manufacturer's works for repair resulting in prolonged loss of production.

The generators rated from 3.3 kV to 21 kV are grounded through either high resistance or low resistance to limit the ground fault current. If ground fault current magnitude is high, the core damage at the point of fault in generator will be high. To limit the damage to the core, manufacturers allow only a limited ground fault current. This information is usually provided in 'core damage curves' supplied by manufacturer. A typical core damage curve is shown in Fig 13. For example, ground fault current upto 25A is tolerated for 1 sec. This curve is used as a guide when selecting NGR and setting stator earth fault relays in generator protection. The various grounding methods have been dealt in detail in Ref [3].

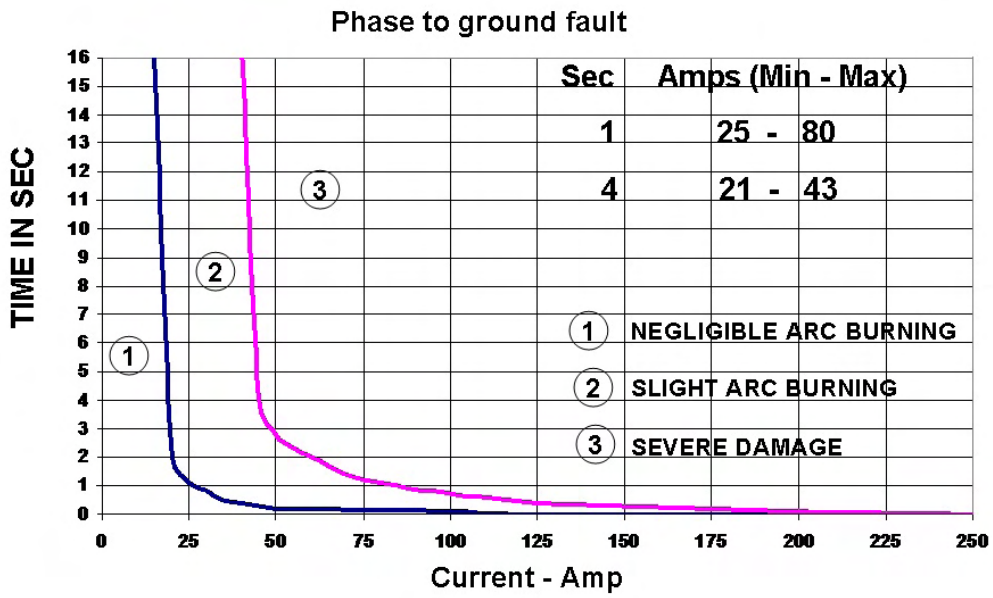

Fig13 Generator - Core damage curve

9.0 High Resistance Grounding

In High Resistance Grounded system, the ground fault current (I_F) is limited to about 10A to 15A. The value of resistor is selected such that, for a ground fault, current through resistor is equal to total system capacitive current. The system capacitive current is approximately 3 to 5A per phase.

Consider a 11 kV system. Let the ground fault current be limited to 10A. The value of NGR is approximately given by:

$$R_G \cong \frac{\left(11000/\sqrt{3}\right)}{10}$$

$$= 635\ \Omega.$$

10.0 Neutral Grounding Transformer (NGT)

But a more economical solution is to connect the resistor across the NGT. The scheme with NGT is shown in Fig 14.

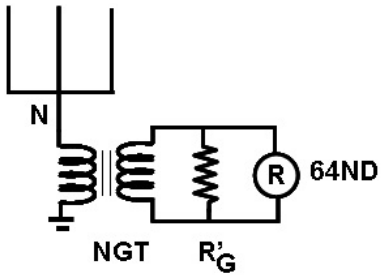

Fig 14 Resistor connected to NGT

The voltage ratio of NGT is chosen as $\frac{\left(11000/\sqrt{3}\right)}{240}$.

Turns ratio of NGT, $T_R = \frac{\left(11000/\sqrt{3}\right)}{240}$

$$= 26.5$$

Value of resistor on the LV side $R'_G = \frac{635}{(26.5)^2}$

$$= 0.9\ \Omega.$$

The use of low resistance low voltage resistor results in economical design. A voltage relay (Neutral Displacement Relay) is connected across the resistor to detect ground faults.

Power balance:

Directly connected: $10^2 \times 635$

$$= 63.5\ KW$$

Through NGT: $I_{PRI} = 10A;$

$I_{SEC} = T_R \times 10$

$= 265\ A$

$Power = 265^2 \times 0.9$

$\cong 63.5\ KW$

The required NGT rating is 63.5 KVA for (max) 30 sec rating. It is expected that no fault will hang on the generator for more than 30 sec. The derating factor K_D is about 6 [4]. The rating of NGT on a continuous basis will be about 63.5 / 6 = 10.6 KVA.

The specification of NGT : 1 phase, 10KVA, (11000/√3) V / 240V

The actual fault current will be marginally less than 10A as the following are ignored in the calculation:

(i) Resistance of transformer secondary and connecting cable to resistor

(ii) Leakage reactance of transformer

11.0 Low Resistance Grounding

The ground fault current is limited to about 100A to 400A compared to 10A in high resistance grounded system. On a 11kV system, with ground fault current limited to 400A, value of NGR is approximately given by:

$$R_G \cong \frac{\left(11000/\sqrt{3}\right)}{400}$$

$$\cong 16\ \Omega.$$

The resistor is directly connected between neutral and ground (Fig 15). Current relay in neutral circuit is possible as ground fault current is not too low.

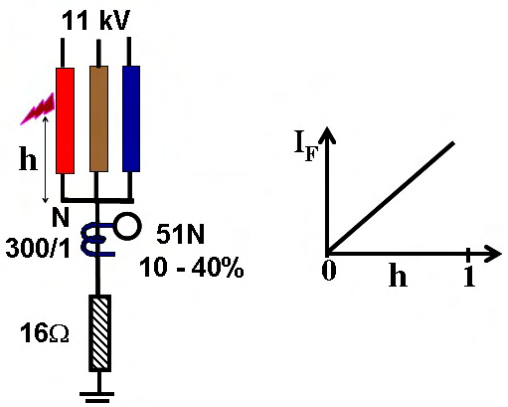

Fig 15 Sensitivity of ground fault Protection

12.0 Sensitivity of ground fault protection

For fault on terminal (Fig 15),

$$I_F^T = \frac{\left(11000/\sqrt{3}\right)}{16}$$

$$\cong 400\ A$$

For fault at a distance 'h' from neutral,

$I_F = h\ I_F^T$ … (1)

For fault on terminal, h = 1

$I_F = 400\ A$

For fault on neutral, h = 0

$I_F = 0$

Assume the relay is set for a minimum pick up of 10%.

Minimum fault current for relay pick up:

$I_F = 300 \times 0.1$

$= 30\ A$

From Eqn (1):

$30 = h \times 400$

$h = 0.075\ (7.5\%)$

For this relay setting, 7.5% of winding from neutral is not protected. If setting is increased, zone of unprotected winding also increases correspondingly.

Compared to high resistance grounded system, the core damage at the faulted location will be more. Typical REF scheme for alternator is shown in Fig 16.

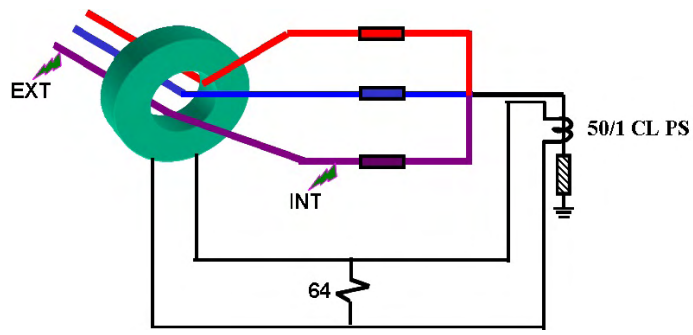

Fig 16 REF Protection with CBCT

13.0 Hybrid Grounding

It combines the advantage of high resistance grounding (low fault current and less core damage) and low resistance grounding (sufficient fault current and high sensitivity). The scheme is shown in Fig 17.

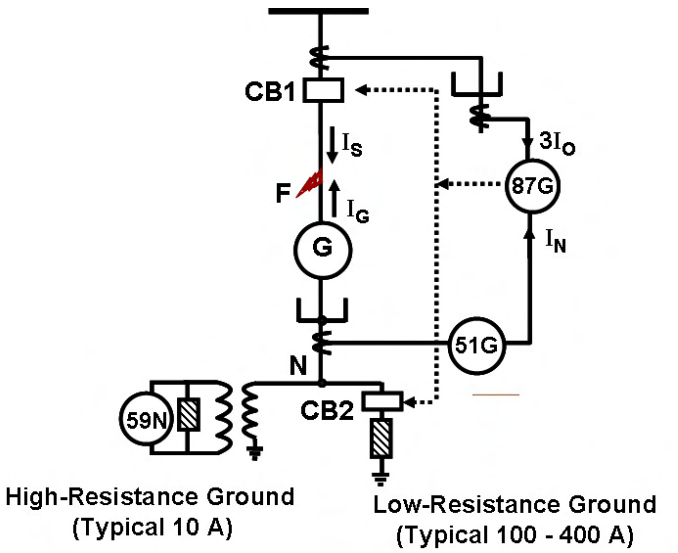

Fig 17 Hybrid grounding

For an internal fault at F, after CB1 trips, system contribution I_S will be zero but large generator contribution I_G will continue to flow till the flux in the machine decays to a low value. The generator is initially grounded through low resistance. For a ground fault, sufficient fault current flows for ground differential 87G to pick up. It trips both CB1 and CB2. Once CB2 trips, the generator is grounded through high resistance. The generator contribution subsequently is very less.

14.0 Grounding Mix-up

The fallacy in mixing up grounding is explained with an example (Fig 18).

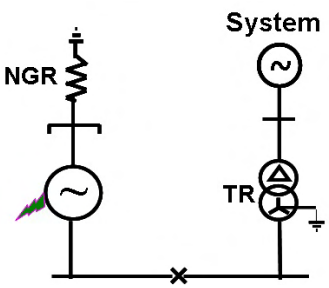

Fig 18 Grounding Mix-up

The generator is grounded through NGR. The transformer is solidly grounded. For any ground fault external to the generator, the current fed by it is limited by NGR to say 10A. But for fault within the generator, the current at the point of fault is determined by external system grounding. If external system (in this case transformer TR) is solidly grounded, it can contribute say 40kA. Thus at the point of fault within the generator, the current is not limited to 10A but can be as high as 40kA (Fig 19).

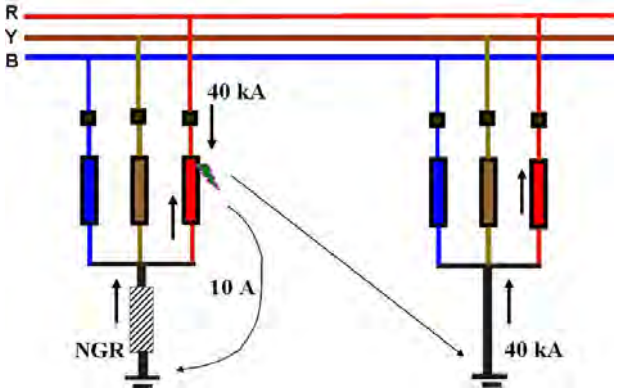

Fig 19 Fault contribution

The very purpose of providing NGR to limit core damage in generator is defeated. *This brings out the important fact that when two systems are paralleled, grounding type has to be compatible.*

To avoid grounding mix-up, one alternative is to introduce NGR in transformer (Fig 20). If the existing 6.6 kV cables are earthed grade, they may need to be replaced by UE grade. Considering the vastness of cable network, removing old cables and laying and terminating new cables, this alternative is not practical.

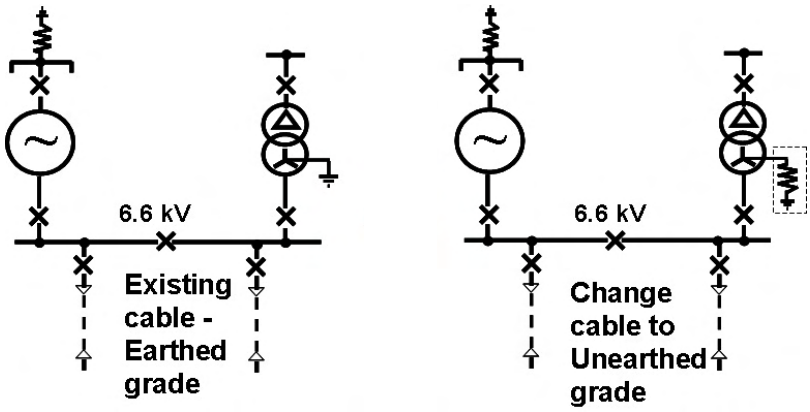

Fig 20 Alternative 1

The other alternative is to introduce 1:1 Generator Transformer with vector group of star – delta (Fig 21). The star neutral is solidly grounded. The delta winding offers ground fault isolation between generator and the system. The economics of providing additional GT needs to be looked into.

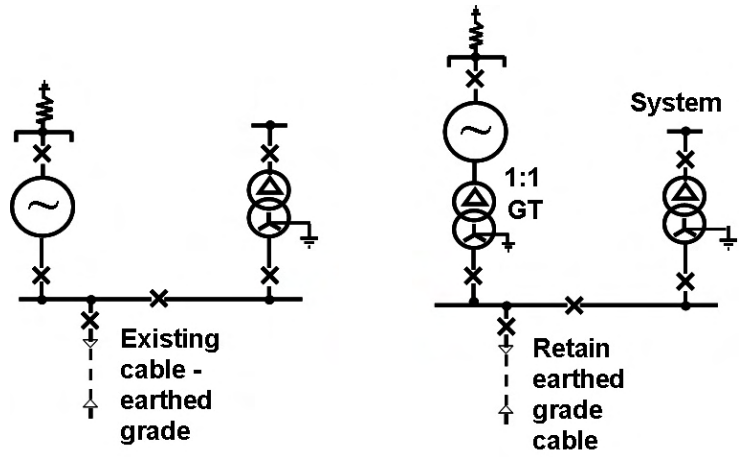

Fig 21 Alternative 2

15.0 NGR Enclosure Earthing

The sheet steel enclosure housing resistor stack is on insulated base (Fig 22).

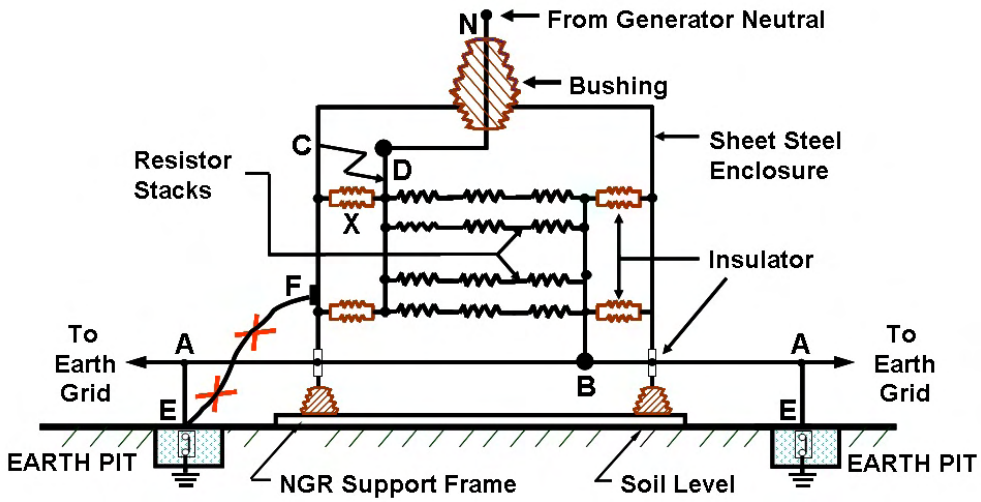

Fig 22 NGR Cubicle Earthing

Unlike conventional practice, the *enclosure should not be earthed*.

15.1 Case 1

Connection EF is absent. All insulators are healthy. For a ground fault, the return path is E-A-B-Resistor-D-N to source neutral.

15.2 Case 2

Connection EF is absent. Assume that insulator X has cracked. For a ground fault, the return path is still E-A-B-Resistor-D-N to source neutral.

15.3 Case 3

Connection EF is present. Assume that insulator X has cracked. For a ground fault, the return path will be E-F-C-D-N to source neutral. The resistor is completely bypassed. Instead of high (or low) resistance grounded system, it has become solidly grounded system with disastrous consequences from core damage point of view.

Under normal operating conditions NGR carries very little current. IR testing of NGR is rarely carried out as part of routine maintenance practices. Hence a leaking insulator may be present but its effect is felt only during fault conditions.

The practicing engineer‘s anxiety regarding safety when the enclosure is not earthed can be addressed as follows. When an earth fault occurs, if the enclosure is not earthed, the enclosure may experience a rise in voltage. But modern protection systems clear the faults within one second. Hence the probability that some one touches the enclosure exactly during that one second when the fault has occurred is very remote. As extra precaution, the enclosure is kept within a fence or located at elevated platform.

16.0 Conclusion

The type of grounding has major influence on zero sequence current circulation when the machines are running in parallel. LV generators are solidly grounded. MV generators are grounded through either high resistance or low resistance. In high resistance grounded system, procedure to size NGT and NGR is given. In low resistance grounded system, relationship between ground fault relay setting and percentage of winding protected is explained. The idea of hybrid grounding is introduced that acts like a low resistance grounded system initially but switches to high resistance grounded system subsequently. Mixing different types of grounding leads to undesirable results and should be avoided. The article ends with dangers of earthing NGR enclosure as a routine practice. The ideas presented here will hopefully encourage the practicing engineer to critically review his existing grounding system to spot any lacuna in basic design.

17.0 References

[1] "Peculiarities of delta connection in electrical power systems", K Rajamani, IEEMA Journal, Dec 2003, pp 38 – 42.

[2] "Grounding of Electrical system – Part I", K Rajamani, IEEMA Journal, May 2006, pp 52 – 56.

[3] "Grounding of Electrical system – Part II", K Rajamani, IEEMA Journal, June 2006, pp 51 – 58.

[4] Electrical transmission and distribution reference book: Westinghouse Electric Corporation.

Comments from Scrutineers' and Author's Replies

1.0 Scrutineers' Comment

Harmonic and zero sequence:

I_{NEG}: Negative Sequence- please check and preferably give a sequence diagram for clarity. Uniform method of representation to be maintained as it is felt that these negative and positive signs need to be reviewed. (Ref to Fig 1)

Fig.1 – It is suggested that vector rotation should be maintained anticlockwise and the phases marked accordingly for clarity. Arrows may be shown little bolder.

Author's Reply

Directions indicated in Fig 1 are as per standard accepted practices (e.g. Positive sequence – anticlockwise, Negative sequence – clockwise,..).

2.0 Scrutineers' Comment

Generators connected to common bus:

Fig.3 – Direction of positive or negative current flow is dependant on which machine has to be predominant higher harmonic voltage.

Zero sequence currents – It may kindly be noted that even though third harmonic voltage which is always present due to windings not in perfect symmetry and phenomena of flux distance from rotor, due to stator/armature winding construction, zero sequence impedance of alternator is very low and as such can give rise to high circulating zero sequence currents even with a small third harmonic voltage.

Author's Reply

OK

3.0 Scrutineers' Comment

Individual NGR for the units:

Generator on common bus – High resistance grounded system

However the circulating current will result into losses and heating notwithstanding problems in EF relay setting.

Author's Reply

As explained in the article, the circulating zero sequence currents will be too low and not cause for concern.

4.0 Scrutineers' Comment

Generators on common bus – Low resistance grounded systems

So far as REF protection is concerned, even with 1 NGR in circuit, it remains operative. However, the % of winding protected in any of these cases gets limited based on relay sensitivity.

Author's Reply

With numerical relays, extremely sensitive setting can be achieved (say 5%).

5.0 Scrutineers' Comment

Zig-zag grounding transformer common to all the units:

Fig 9 – In this particular case, as also other similar application, interlock annunciation (audio-visual) is a must. This should take care of ungrounded system, multiple grounded system (subject to permissible limits of zero sequence current) as well as zero sequence neutral to be changed, especially when grounded machine CB trips off, in case of possibility that in spite of generator NGRs coming in series with grounding transformer NGR; a certain amount of current will flow in neutral circuit.

As such zig-zag transformer as well as NGR must be assigned continuous current capability with low temperature rise and prevent possibility of NGR getting open circuited due to thermal shock. Notwithstanding fire risk if the NGR enclosure is not painted with high temperature resistant paint.

Author's Reply

NGR and Grounding transformers are usually rated for 30 sec duty.

6.0 Scrutineers' Comment

LV Generator grounding:

1st paragraph – 415 V generators ……..

When they are supplying TPN load, which require solidly grounded neutral for voltage stability.

The neutral isolating device must be a CB or heavy-duty latch-in contactor.

Author's Reply

OK

7.0 Scrutineers' Comment

Fig. 12- Please clarify what is intended to convey earthing interconnection is not proper as diagram shows clear interconnection of neutral through earth strip before neutral CB in which case zero sequence current will and shall flow.

Author's Reply

It is to caution regarding relative position of interconnecting strip / grid with respect to isolator position.

8.0 Scrutineers' Comment

2nd paragraph – In case of TPN ……..

The ideal practice would be to have two distinct and independent earthing connections from neutral to NGR to station grid; as physical inspection while in operation cannot be carried out easily and is rarely done by operating personnel.

Author's Reply

OK

9.0 Scrutineers' Comment

MV Generator Grounding :

2nd paragraph – The generators rated from ……..

Since zero sequence impedance of a rotating machine is very low, solid grounding can result in earth fault current – approximately 1.5 times three phase value. As such for turbo generator and high-speed machine where possible, the earth fault current should be restricted to 5-10 amps only and detection carried out by voltage relay for earth fault.

Author's Reply

Current per se does not reflect the true situation. Core damage curve relates current magnitude with allowable time. If earth fault can be cleared very fast, allowable earth fault current can be also higher.

10.0 Scrutineers' Comment

Neutral Grounding Transformer:

NGRs chosen for HV systems in particular should have two parallel elements for reliability such that in unlikely event of one element getting damaged (crack due to sustained high temperature) the system doesn't become ungrounded. If need not be over emphasized that in an ungrounded system, should a earth fault takes place, the resulting transient caused by arcing earths will result into total insulation damage for all equipments connected to the bus as the case may be.

Fig. 14 – In addition to zero sequence over voltage relay, 64ND, it is preferable to have current relay as backup, since reliability is paramount for detecting and isolating neutral end earth fault.

Author's Reply

OK

11.0 Scrutineers' Comment

Low resistance grounding:

As stated earlier, zero sequence over voltage relay connected through a PT across NGR serve as a backup is advantageous.

Fig.16 – It may please be noted that size of CBCT becomes deciding factor as all the 3 phase leads (fully insulated) have to pass through CBCT where large capacity machines are involved, a bus-duct is used up to say, 2000 A. Above which it may be necessary to go in for segregated bus-ducts. In such cases, provision of CBCT will post problems. In such instances, it will be preferable to use differential CTs, which are interposing ACT, for restricted earth fault protection.

Author's Reply

The scheme shown in Fig 16 is typically for DG sets rated for less than 6 to 10 MVA at 6.6 kV or 11 kV. This scheme is rarely used in big units having bus ducts.

12.0 Scrutineers' Comment

Grounding mix up:

Fig. 18 – The system transformer is star on generator side and solidly grounded, there is possibility of continuous 3rd harmonic current, which will result into heating, RF interference. Generally, transformer connection should be start-delta to avoid solid grounding and stable neutral to the system. In such cases, generator transformer is a better solution.

Author's Reply

OK

13.0 Scrutineers' Comment

NGR Enclosure Earthing

Fig 22 – Case 2

If insulator is cracked, there is likelihood depending on extent of damage for point D to be connected to enclosure. An in turn point B where by passing NGR resulting in solid grounding. For such cases, NGR specifications should be stringent and adhered to during inspection and installation.

It may also be noted that a safety enclosure for NGR housing is must if it is when mounted on insulator to prevent touch & step & contact potential in event of earth fault with cracked insulator. The enclosure potential can reach a value of 0.63 EG.

Enclosure should be of fine mesh to protect the standoff insulators from extraneous damage.

Author's Reply

OK

ieema journal

Evaluation of Generator Parameters by Online Testing

Dr K Rajamani and Bina Mitra,

Reliance Infrastructure Ltd, MUMBAI

(February 2008, IEEMA Journal, Page 68 to 82)

ieema journal

Evaluation of Generator Parameters by Online Testing

Dr K Rajamani and Bina Mitra, Reliance Infrastructure Ltd., Mumbai

1.0 Introduction

The rapid growth in generation and associated transmission network has enormously increased the complexity of operation and control of interconnected power system. With increased interconnection, a disturbance in one part often leads to grid collapse. After such blackouts, system studies are carried out to analyze the occurrence. The studies may reveal deficiencies in design, mal-operation of elements or improper coordination. However many times these simulation studies may not indicate the true picture as the data used for the studies are not actual measured data. These studies are based on the design data given by manufacturer or typical data given in publication which may vary widely from actual site data. Generators are the heart of interconnected power system and understanding its behavior under all conditions has always been a challenge to power system engineers. The major generator parameters which influence system stability are:

(i) Inertia Constant (H), sub-transient reactance (X''_d), transient reactance (X'_d), synchronous reactance (X_d), direct axis open circuit time constant (τ'_{do})

(ii) Excitation system

(iii) Governor system.

In 1996, after the western part of US collapsed, WSCC (Western System Coordination Council) insisted on testing of generator units to obtain reliable generator parameters (Generator and exciter including PSS, governor –turbine). The testing helped in validating design data and thereby improving the predictability of system performance during system contingencies.

Companies like GE performed tests at site and derived unit parameters for use in dynamic stability studies. Since these tests are performed at low power levels, risk to the machines is also low. On the same vein, we have recently conducted tests on 250MW unit in one of our thermal power plants at Dahanu, India. Following tests were conducted:

(i) Saturation Curve Measurement (OCC)

(ii) Short circuit tests (SCC)

(iii) V-curve measurement

(iv) Partial Load trip test.

(v) No load, zero power factor trip test with AVR in Manual mode

February 2008, IEEMA Journal, Page 68 to 82

(vi) No load, zero power factor trip test with AVR in Auto mode

(vii) Voltage build up after field breaker closing

(viii) Field breaker trip test.

(ix) Governor Step test

Before discussing the actual tests, generator basics and significance of various generator parameters are explained.

2.0 Generator Reactance

(i) Sub transient reactance X''_d: Used for breaker rating calculations. It is valid for period less than 50 msec. Typical value is 20%.

(ii) Transient reactance X'_d: Used for relay coordination and motor starting studies. It is valid for period 50 msec < t < 1 sec. Typical value is 25%.

(iii) Synchronous reactance X_d: It is valid for a period more than 1 sec. Typical value is 200%.

3.0 Inertia Constant (H)

Inertia constant is *not* Moment of Inertia. Moment of inertia (WR^2) varies widely with machine ratings. But inertia constant varies within narrow range.

H is a normalized value or PU value similar to transformer impedance.

$$H = \frac{\text{Stored Energy}}{\text{Machine Rating}} = \frac{5.48 \times 10^{-9} \times WR^2 \times RPM^2}{\text{MVA Rating}}$$

$$\text{Unit of H} = \frac{\text{MW Sec}}{\text{MVA}} = \text{Sec}$$

H is the stored energy in rotating mass of turbine, generator and exciter.

$H = H_T + H_G$; where H_T is for turbine and H_G is for generator.

In hydro units, H_T (Turbine) is 10% and H_G (generator) is 90% of total.

In steam units, H_T is 75% and H_G is 25% of total.

High Inertia (WR^2) does not necessarily mean high Inertia constant (H). Speed significantly influences H (in square proportion). It is pertinent to note that speed of thermal unit is typically 3000 rpm while that of hydro unit is 300 to 400 rpm.

Another similar term used is Mechanical starting time (M) = 2 H.

(i) Significance of H expressed in seconds. (Refer Fig. 1)

Assume load throw off occurs on full load. The acceleration torque is 100%.

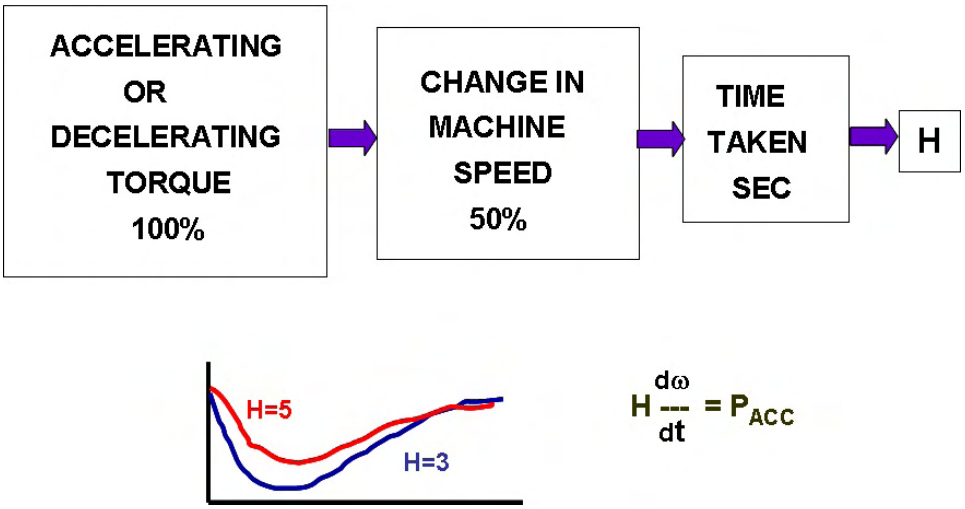

Fig 1 Significance of Inertia Constant (H)

Let inertia constant be 5 sec. Then in 5 sec, the speed change is 25 Hz (50% of 50 Hz).

In, say, 0.6 sec, the speed change is $\frac{(25x0.6)}{5}$

$= 3\ Hz.$

Inertia is the only physical asset that can come to the rescue of the system in the first one second after a disturbance. Most pronounced effect of high value of H is to reduce initial rate of frequency decline i.e. to arrest initial δf / δt.

H does not affect the value of settling frequency after a disturbance.

4.0 Short Circuit Ratio (SCR)

Short Circuit Ratio = $\frac{1}{X_d}$

In older machines, X_d is about 100% and SCR is nearly 1. In modern machines, X_d is nearly 200% and SCR is nearly 0.5.

Higher the SCR, lower the reactance, higher the machine size, and higher the cost. Lower the SCR, higher the reactance, lower the machine size, and lower the cost.

Power transfer capability = $\left(\frac{E_1 E_2}{X}\right) \sin\delta$

In modern machines, lower SCR and higher X (denominator) are tolerated due to fast acting excitation systems which tend to keep E_1 & E_2 at very high values (numerator). SCR as a measurement index is not linear. What may appear as relatively large change in SCR has correspondingly small change in the stability margin. The lower stability

index with lower SCR generators can be more than off-set by reasonable increase in performance using fast excitation control.

5.0 Open circuit field time constant (τ'_{do})

It relates the time response of armature (stator) voltage for a change in field voltage. High response excitation system may change the field voltage very fast. But its effect to be noticed as change in armature voltage is influenced by τ'_{do}.

6.0 Generator Controls - P-F loop and Q-V loop

(i) Refer Fig. 2

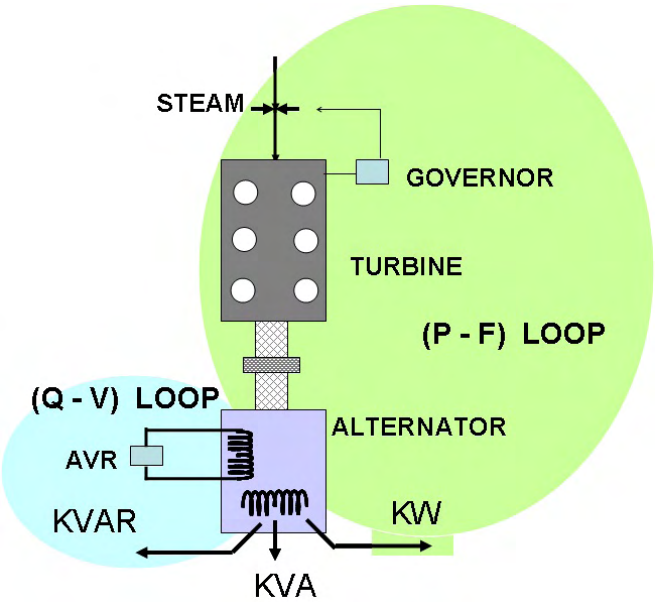

Fig 2 Generator Control

(ii) Active power (MW) is a function of mechanical power input from prime mover (turbine). This influences speed/ frequency.

(iii) Reactive power (MVAR) is a function of generator voltage (excitation control).

(iv) Change in MW affects frequency (used in estimating H and governor response)

(v) Change in MVAR affects voltage (used in estimating reactances and AVR response)

7.0 Governor Controls

(i) Speed Control Mode

Unit operates in this mode when islanded and tries to maintain constant speed/ frequency.

(ii) Droop Control Mode

This is the preferred mode of control when tied to grid.

8.0 On line Testing of Generator and Generator Controls

250MW Unit of Dahanu Thermal Power Station was to be taken out for scheduled maintenance. It was thought that it will be a good opportunity to perform some of the tests to evaluate generator parameters, AVR and governor response through on line measurements. The design data of the unit under test is given below:

Description	**Particulars**
Manufacturer name	BHEL
Maximum continuous output at rated Hydrogen Pressure as per specification	294 MVA
Rated terminal voltage - Line (Phase)	16.5 KV (9.526 kV)
Rated stator current	10290 Amp
Rated power factor	0.85
Generator reactance in percentage at rated KV and MVA	
Direct axis synchronous reactance (unsaturated) X_d	215
Direct axis synchronous reactance (saturated) X_d	192
Direct axis transient reactance (unsaturated) X'_d	26.3
Direct axis sub-transient reactance (unsaturated) X''_d	20.24
Short circuit ratio (SCR)	0.52
Saturation factor @ 1 pu.	1.12
Time Constants	
Direct axis transient open circuit time constant	7.7 secs
Inertia constant H (KW – Sec / KVA)	
Complete turbine generator unit	4.623
Excitation System	Brushless
Automatic voltage regulator	
Manufacturer	BHEL EDN
Type	Thyristor Control
Excitation requirement at no load	857A, 96V
Generator Transformer	
Rating	315 MVA
Voltage Ratio	16.5 kV / 235 kV
Current Ratio	11022 A / 774 A
Reactance at nominal tap	14.49%

9.0 Scope of tests

The tests conducted and test details are listed below. The tests performed have been categorized as tests when connected to grid and tests in isolated mode (not connected to grid).

9.1 Tests when unit is in isolated mode (not connected to grid)

(i) Saturation Curve Measurement Test – To determine saturation factor at 1 pu and at 1.05 pu voltage.

(ii) Short Circuit Test – To evaluate generator direct axis reactance (X_d), short circuit ratio (SCR) and generator transformer reactance (X_t).

(iii) Voltage build up after field breaker closing – To determine direct axis open circuit time constant (τ'_{do}).

(iv) Field breaker trip test – To find generator residual voltage and residual voltage decay time constant.

(v) Governor Step response test (without load) – To check governor response in speed control mode.

9.2 Tests when unit connected to grid

(i) V-Curve Measurement Test – To determine unsaturated direct axis reactance (X_d).

(ii) No load, zero power factor trip test with AVR in Manual mode to determine direct axis reactance (unsaturated) - Transient reactance (X'_d) and Sub-transient reactance (X''_d) and direct axis open circuit time constant (τ'_{do}).

(iii) No load, zero power factor trip test with AVR in Auto mode to check AVR response.

(iv) Partial load trip test to determine inertia constant (H).

(v) Governor Step response test (with load) – To check governor response in droop control mode.

10.0 Preparatory steps before starting test sequence

(i) These tests are performed usually when the machine is taken out for scheduled maintenance or when the machine is brought back on line after overhaul. Since the machine is repeatedly closed or tripped during the test duration, the exercise is carried out from midnight to 6AM to beat the grid peak load conditions.

(ii) Before starting the test, the step by step sequence was discussed with plant engineers comprising Operations, C&I (Control and Instrumentation), Electrical

and management staff. Safety aspects were thoroughly discussed. To abort the test at any time was left to the discretion of operator if he senses any control problems. Protection engineers reviewed the settings revised specifically for the tests.

(iii) The changes in protection to be done for performing the tests when unit is connected to grid are:

(iv) Bypass turbine trip subsequent to generator trip (turbine must continue to run subsequent to tripping of generator circuit breaker).

(v) Ensure low forward power protection is wired for alarm only.

(vi) Increase the time delay for reverse power protection to 10 seconds.

(vii) Ensure that unit auxiliaries are on station bus. (If the auxiliaries are on unit bus tripping of field breaker will result in boiler tripping)

(viii) Window of opportunity to capture the machine response for each test is very narrow. Since many of the tests are performed at very low loads (almost zero MW), control of thermal units is very delicate. The operators desire to run the machine at such low loads only for the minimum time dictated by the tests. If we miss to capture the response due to recording failures, operators are very reluctant to 'repeat' the tests. Also prolonged operation at low loads is feasible only with significant oil support which adds to operational cost. To ensure reliability of recording, following three meters were deployed to record simultaneously the parameters:

(a) A-Eberle make, Power Quality Analyzer, PQ-id

(b) Hioki make, Power Quality Analyzer, 3196

(c) ABB make, Disturbance Recorder, Indacic 650

11.0 Analysis

11.1 Open Circuit Test: Saturation Curve Measurement (Refer Fig. 3)

(i) Status – Isolated

Test Conditions

(i) Run the machine at 3000 rpm.

(ii) Close field circuit breaker.

(iii) Keep AVR in manual mode

(iv) Adjust the field current to vary terminal voltage from 70% to 105% in 10 steps.

(v) Measure terminal voltage and field current at each step.

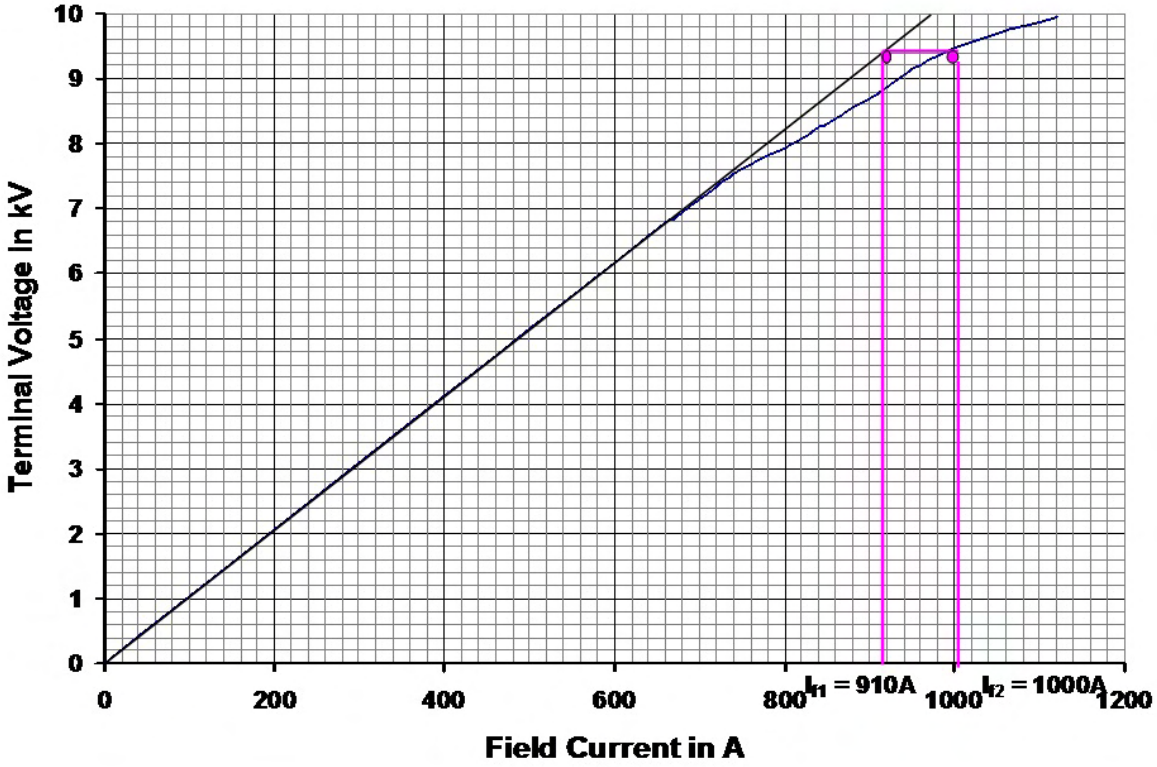

Fig 3 Saturation Curve

Test Results

Field Current in A	660	720	810	880	900	915	945	960	990	1050	1120
Terminal Voltage (Line to Neutral) in kV	6.79	7.321	8	8.55	8.7	8.82	9.1	9.22	9.422	9.69	9.958

Saturation Factor @ 1pu (ie 9.526kV) $= 1 + \dfrac{\text{Field Current on OCC – Field on AGL}}{\text{Field current on AGL}}$

Where AGL – Air Gap Line, $= 1 + \dfrac{1000 - 910}{910}$

$= 1.1$

Saturation Factor @ 1.05 pu (ie 10kV) $= 1 + \dfrac{\text{Field Current on OCC – Field on AGL}}{\text{Field current on AGL}}$

$= 1 + \dfrac{1120 - 970}{970}$

$= 1.155$

11.2 Short Circuit Test: To evaluate generator direct axis synchronous reactance, SCR and transformer reactance

(i) Status – Isolated

Test Conditions

(i) Refer Fig 4. for the SLD during test.

(ii) Keep 220kV Generator Circuit Breaker open.

(iii) Connect shorting link in 220kV switchyard at HV terminals of generator transformer. AAAC 487 sq. mm conductor is used for shorting link. It can carry 800 A.

(iv) Keep generator transformer at working tap under normal operating conditions.

(v) Bring the machine upto 3000 RPM

(vi) Keep AVR in manual mode

(vii) Close the isolator to short HV terminals of generator transformer.

(viii) Close field circuit breaker.

(ix) Build up the terminal voltage such that generator current is around 2000A.

(x) Note generator terminal voltage, generator current and field current.

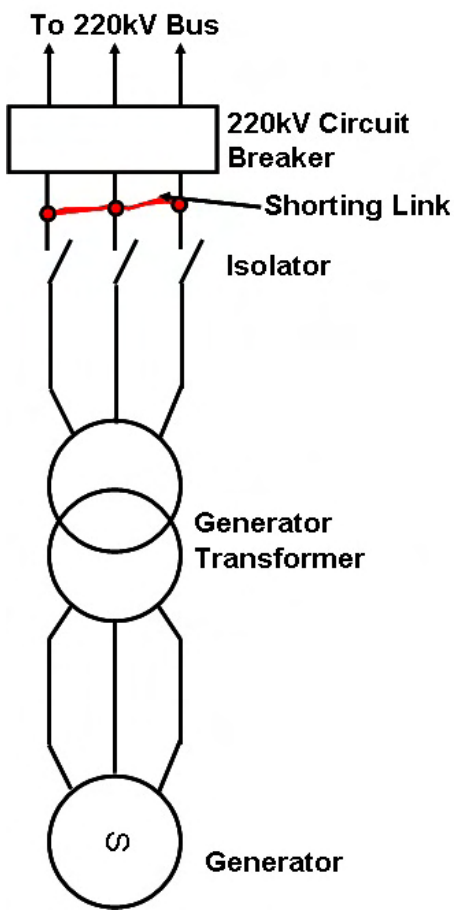

Fig 4

(xi) Repeat the test for generator current of 4000A and 10000A by varying field.

Test Results

11.2.1 To determine Transformer reactance at working tap (Refer Fig. 5)

Terminal Voltage, $V_t = I_a \; X_t$; *Transformer réactance,* $X_t = \frac{V_t}{I_a}$

On transformer rating, *1 pu voltage* $= \frac{16{,}500}{\sqrt{3}} = 9526\ V$

1 pu current $= \frac{315}{\sqrt{3} x 16.5} = 11.02\ kA$

Actual Values			Pu. Values on Transformer Rating (*)		
Field Current, I_f in A	Terminal Voltage, V_t in V	Current, I_a in A	Terminal Voltage, V_t	Current, I_a	Réactance $X_t = V_t / I_a$
420	248	2000	0.0260	0.1815	0.1432
780	498	4000	0.0523	0.3629	0.1441
1860	1236	9954	0.1297	0.9031	0.1436

11.2.2 To determine direct axis synchronous reactance (X_d) and SCR (Refer Fig. 5)

For evaluating X_d, values corresponding to 2000A are considered since the machine is in fully unsaturated state.

From OCC (Refer Fig. 3), OCC Voltage for I_f = 420A is 4.3 kV

On generator rating, $1\ pu\ voltage = \frac{16{,}500}{\sqrt{3}} = 9526\ V$

$$1\ pu\ current = \frac{294}{\sqrt{3} x 16.5} = 10.29\ kA$$

$$E_g = \frac{4.3\ kV}{9.526\ kV} = 0.4514\ pu$$

$$V_t = \frac{248V}{9526V} = 0.0260\ pu$$

$$I_a = \frac{2000A}{10290A} = 0.1944\ pu$$

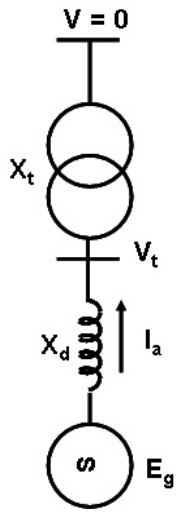

Fig 5

$$E_g = V_t + (-j\ I_a) \times (j\ X_d)$$

$$E_g = V_t + I_a \times X_d$$

$$X_d = \frac{E_g - V_t}{I_a}$$

$$= \frac{0.4514 - 0.026}{0.1944}$$

$$= 2.188\ pu$$

$$\frac{Unsaturated\ X_d}{Saturation\ Factor\ @\ 1pu} = \frac{2.188}{1.1}$$

$$= 1.989\ pu$$

Short circuit ratio SCR $= \frac{1}{X_d(Sat)}$

$= \frac{1}{1.989}$

$= 0.503$

11.3 V curve Measurement: To evaluate generator direct axis synchronous reactance

(i) Status – Connected to grid

Test Conditions

(i) Close the field breaker and build the terminal voltage to rated voltage.

(ii) Synchronize the unit. Note field current.

(iii) Keep AVR in manual mode.

(iv) Keep real power close to 0 MW.

(v) Vary the field current and record P, Q, V_t , I_a and I_f.

11.3.1 Evaluation of direct axis synchronous reactance with slope of V curve (when real power is near to zero in under excited region):

The aim of this test was to conduct zero power factor test with leading power factor (VAR absorption). The slope of Field current Vs. Armature current curve theoretically gives value of unsaturated synchronous reactance, X_d. During the tests, minimum MW that could be maintained was between 9-12 MW, considering the controllability of boiler and turbine. Low power factor could be achieved in under excited region which is used for estimating X_d.

Test Results

	Field Current, I_f in A	**Terminal Voltage, V_t in kV**	**Stator Current, I_a in A**	**Real Power, P in MW**	**Reactive Power, Q in MVAR**	**pf**
Under excited	420	8.87	2748	9.10	-70.10	-0.13
	600	9.08	1655	9.70	-41.90	-0.22
	660	9.13	1381	10.00	-34.40	-0.28
Normal excitation	850	9.31	474	10.20	-7.70	-0.79
Over excited	1000	9.42	446	11.30	10.00	0.74
	1100	9.48	669	12.20	17.90	0.56
	1200	9.57	1101	11.40	32.20	0.33

Measured Values in pu

I_f in A	I_f in pu	I_a in A	I_a in pu
420	0.49	2748	0.27
600	0.70	1655	0.16
660	0.77	1381	0.13
850	0.99	474	0.05
1000	1.17	446	0.04
1100	1.28	669	0.07
1200	1.40	1101	0.11

Refer Fig 6 for V Curve,

Slope of the curve in under excited region ie unsaturated region, $m = \frac{0.48}{1.06}$

$= 0.4528$

X_d *(unsaturated)* $= \frac{1}{m}$

$= 2.208$ *pu*

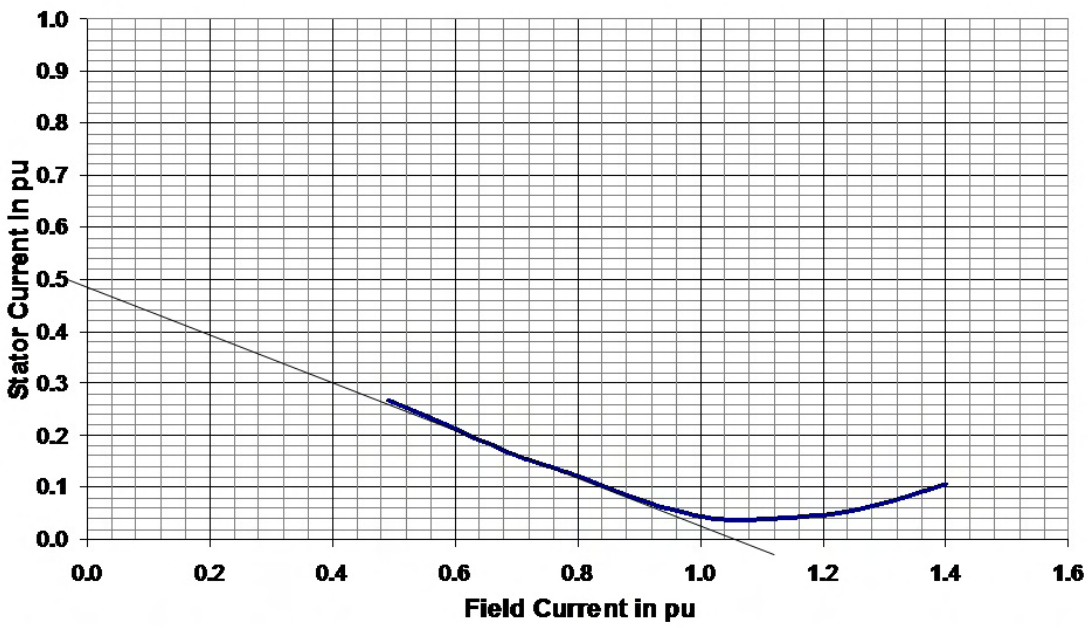

Fig 6 V Curve

11.3.2 Evaluation of direct axis synchronous reactance with V curve data (when real power recorded is substantially high):

When performing the tests on another identical unit of the station, near 0 MW could not be obtained due to operating conditions of steam temperature and pressure at the time of test. Minimum power level which could be maintained during tests was 32 MW. With this power level, readings were noted for different field current. Since ZPF could not be maintained, finding X_d through slope measurement is very inaccurate and hence not used. Instead to determine X_d, an iterative method is used by assuming different values of X_d and δ.

Test Results

Field Current, I_f in A	Terminal Voltage, V_t in kV	Current, I_a in A	Real Power, P in MW	Reactive Power, Q in MVAR	pf
420	8.773	3150	32.9	-75.2	-0.403
620	8.97	2177	33.0	-48.1	-0.566
840	9.113	1457	32.8	-23.8	-0.809
960	9.222	1110	32.8	0.1	1.0

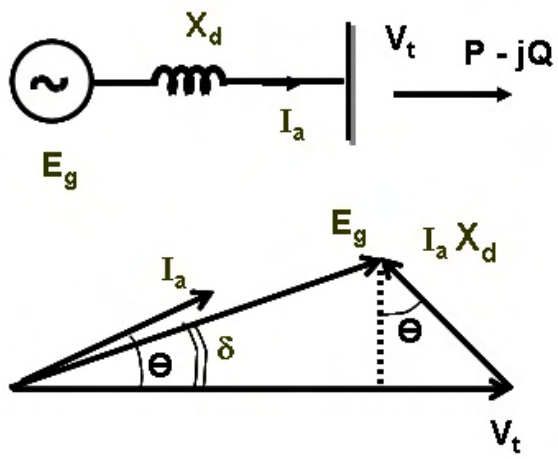

Fig 7

Following formula are used (Refer Fig.7):

$$P = \frac{E_g \, x \, V_t \, x \, \sin\delta}{X_d} \; ; \; Q = \frac{E_g \, x \, V_t \, x \cos\delta}{X_d} - \frac{V_t^2}{X_d} \qquad \text{.....(1)}$$

Where Eg = $\sqrt{V_t^2 + I_a^2 X_d^2 - 2 \, x \, V_t x \, I_a \, x \, X_d \, x \sin\theta}$ *(For leading pf)*

Measured Values in pu				X_d	δ in rad	Calculated value in pu (From Eq (1))	
P	Q	V_t	I_a			P	Q
0.1119	-0.2558	0.9209	0.3061	2.15	0.6806	0.1114	-0.2570
0.1122	-0.1636	0.9416	0.2116	2.15	0.4188	0.1108	-0.1634
0.1116	-0.0810	0.9566	0.1416	2.15	0.3141	0.1122	-0.0804
0.1116	0	0.9681	0.1078	2.15	0.252	0.1117	0.0021

From the above it can be concluded that the value of X_d (unsat) = 2.15 pu since for the given value of δ, measured values of P and Q match with the calculated values of P and Q.

Later, when the unit picked up full load following readings were obtained:

P = 263.1 MW = 0.8949 pu

Q = 64.46 MVAR = 0.2193 pu

V_t = 16.453 kV = 0.9972 pu

I_a = 9505 A = 0.9237 pu

Using equations given above, δ = 51 °; X_d (sat) = 1.967 pu.

This is reasonably close to the design value of 1.92 pu (Refer Cl 8.0).

11.4 Partial Load Trip Tests: To Evaluate Inertia Constant (H)

(i) Status – Connected to grid

Test Conditions

(i) Ensure all measuring instruments are connected and check the wiring.

(ii) Ideally bring load to 50 MW.

(iii) Keep AVR in Auto mode.

(iv) Block AVR changeover from Auto to Manual.

(v) Adjust AVR set point for zero MVAR.

(vi) Open generator circuit breaker.

(vii) Record all voltage and current parameters.

Parameter	Values	Values in pu	Reference
Real Power, $\mathbf{P_0 = \Delta P}$	50.1 MW	0.1704	Fig.9
Reactive Power, Q_0	-2.2 MVAR	0.0075	
Initial Frequency, F_0	50.45 Hz		Fig.8
Peak Frequency, F_{peak}	51.41 Hz		
Change in Frequency ($\mathbf{\Delta F = F_{peak} - F_0}$)	0.96 Hz	0.0192	
Time to reach peak from initial frequency, $\mathbf{\Delta t}$	1.4 secs		

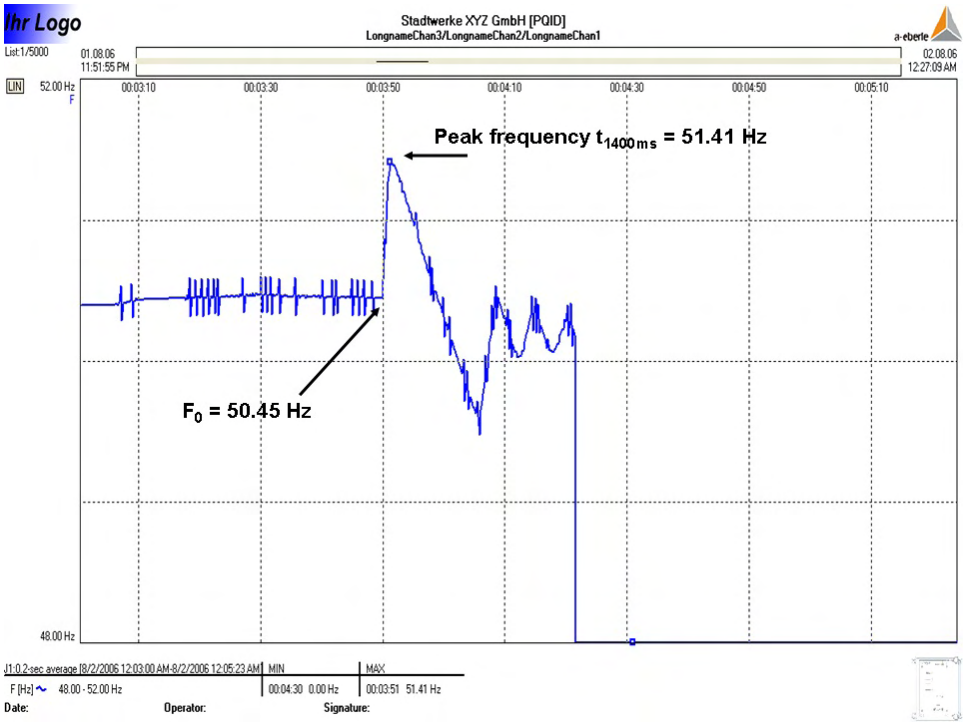

Fig 8 Partial Load Trip Test (50MW, AVR in Auto mode)

Frequency Profile

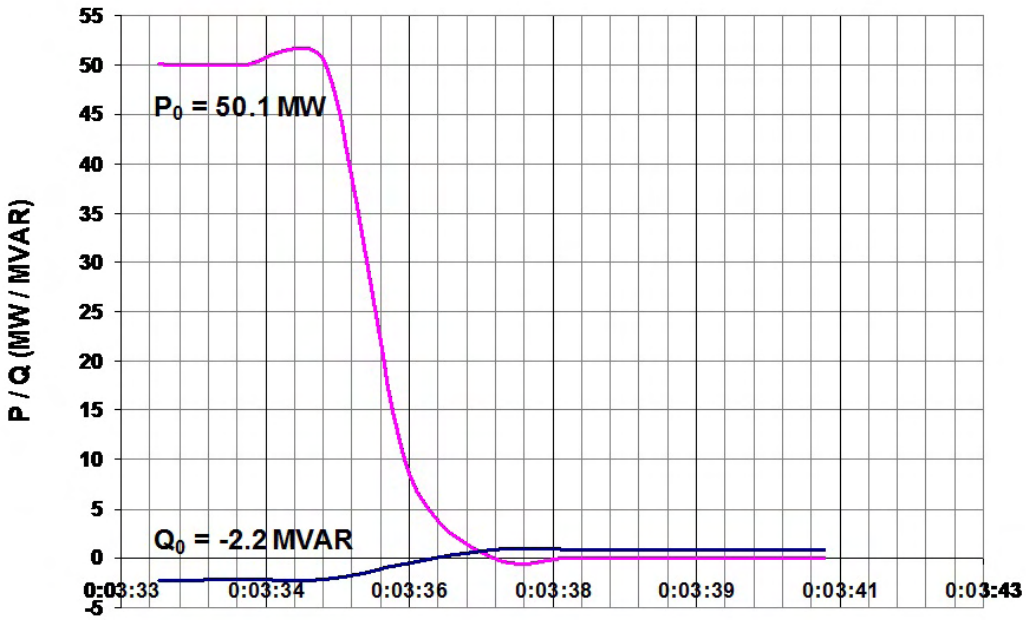

Fig 9 Partial Load Trip Test (50MW, AVR in Auto mode)

Real and Reactive Power Plot

From above table,

$$\Delta F / \Delta t = \frac{0.0192}{1.4}$$

$$= 0.0137$$

$$\Delta P = 0.1704 \text{ pu}$$

$$\text{Inertia Constant, } H = \frac{\Delta P}{2 \times (\Delta F / \Delta t)}$$

$$\text{Inertia Constant, } H = \frac{0.1704}{2 \times 0.0137}$$

$$= 6.22 \text{ secs}$$

11.5 Zero Power Factor Trip Tests: To Evaluate Direct Axis Reactance (X"d and X'd)

(i) Status – Connected to grid

Test Conditions

(i) Synchronize the unit.

(ii) Keep AVR on manual mode.

(iii) Ideally bring load to near 0 MW.

(iv) Adjust AVR set point to absorb 50 MVAR.

(v) Open generator circuit breaker.

(vi) Record all voltage and current parameters.

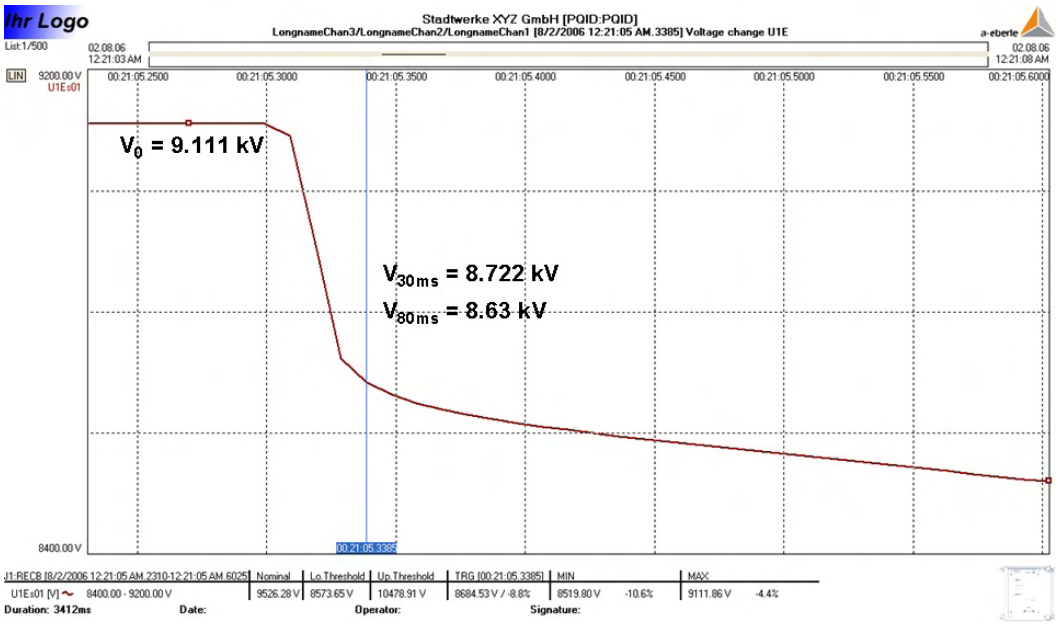

Fig 10 Zero Power Factor Trip Test (50MVAR, AVR in Manual mode)

Voltage Profile

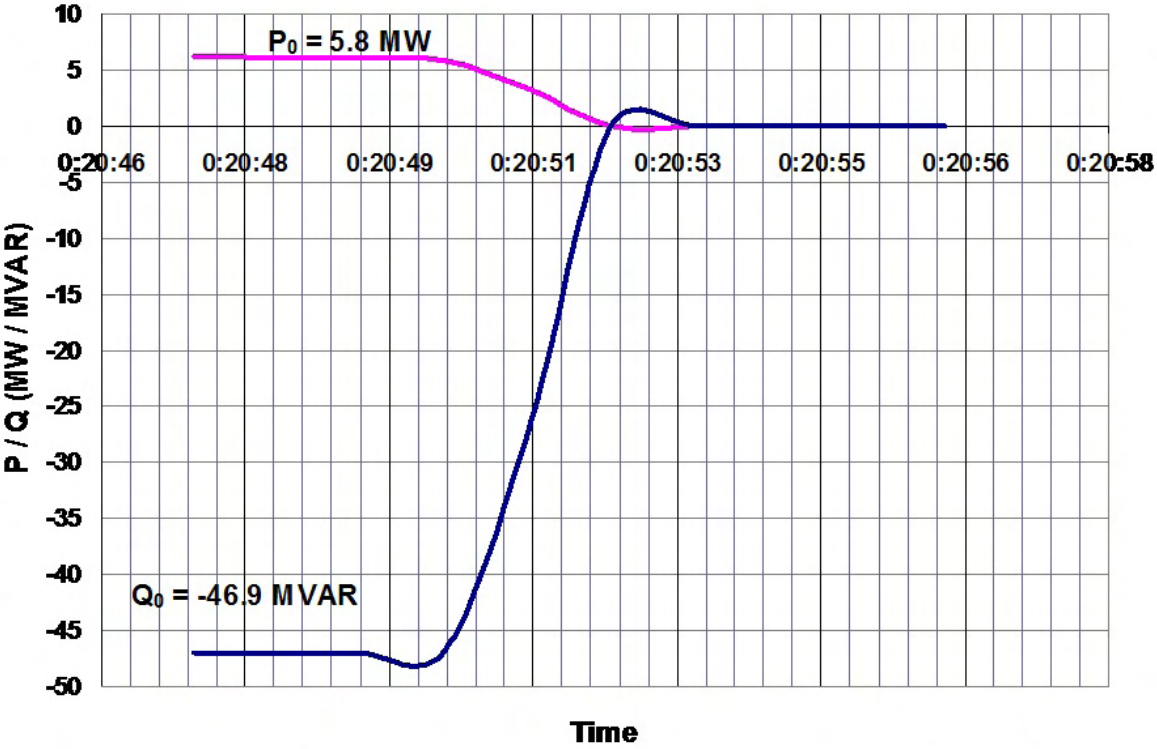

Fig 11 Zero Power Factor Trip Test (50MVAR, AVR in Manual mode)

Real and Reactive Power Plot

Parameter	Values	Values in pu	Reference
Real Power, P_0	5.8 MW	0.0197	Fig.11
Reactive Power, Q_0	-46.9 MVAR	0.1595	
Initial Voltage, V_0	9.111 kV	0.9564	Fig.10
Voltage @ 30ms, V"	8.722 kV		
Change in Voltage @ 30ms **(Δ"V = V" - V_0)**	0.389 kV	0.0408	
Voltage @ 80ms, V'	8.63 kV		
Change in Voltage @ 80ms **(Δ'V = V' - V_0)**	0.481 kV	0.0505	

From above table,

V_0 = 0.9564 pu; Δ"V = 0.0408 pu; Δ'V = 0.0505 pu; Q_0 = 0.1595 pu

Current, $I_0 = \dfrac{Q_0}{V_0}$

$$= \frac{0.1595}{0.9564}$$

$$= 0.1668 \text{ pu}$$

Sub transient reactance, X"$_d$ = $\frac{\Delta''V}{I_0}$

$$= \frac{0.0408}{0.1668}$$

$$= 0.2446 \text{ pu}$$

Transient reactance, X'$_d$ $= \frac{\Delta'V}{I_0}$

$$= \frac{0.0505}{0.1668}$$

$$= 0.3027 \text{ pu}$$

It may be noted that the terminal voltage falls after generator circuit breaker is opened when the unit is initially absorbing VAR. If the unit was delivering VAR initially, the generator terminal voltage would have risen above nominal value after generator circuit breaker is tripped.

11.6 Zero Power Factor Trip Tests: To Evaluate AVR response

(i) Status – Connected to grid

Test Conditions

(i) Synchronize the unit.

(ii) Ideally bring load to near 0 MW.

(iii) Keep AVR on Auto mode.

(iv) Block AVR change over from Auto to Manual.

(v) Adjust AVR to absorb 50 MVAR.

(vi) Open generator circuit breaker.

(vii) Record all voltage and current parameters.

Parameter	Values	Reference
Real Power, P_0	6.1 MW	Fig.13
Reactive Power, Q_0	-51.6 MVAR	
Initial Voltage, V_0	9.14 kV	Fig.12
Min. Voltage, V_{min}	8.595 kV	
Time to recover to initial voltage	1.03 secs	

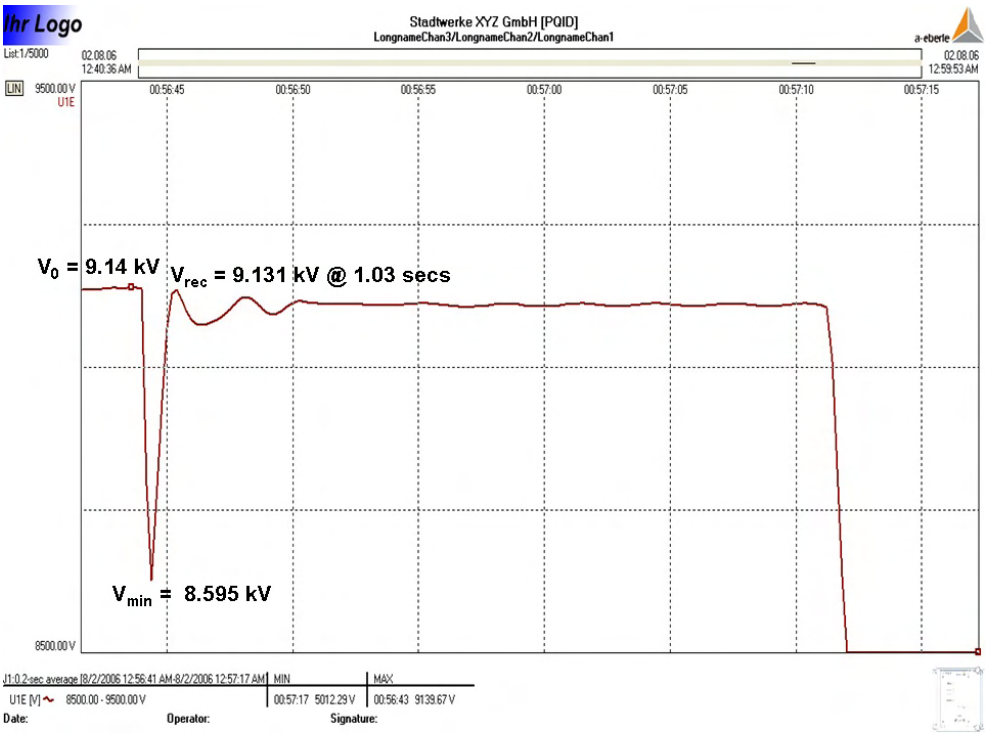

Fig 12 Zero Power Factor Test (50MVAR, AVR in Auto mode)

Voltage Profile

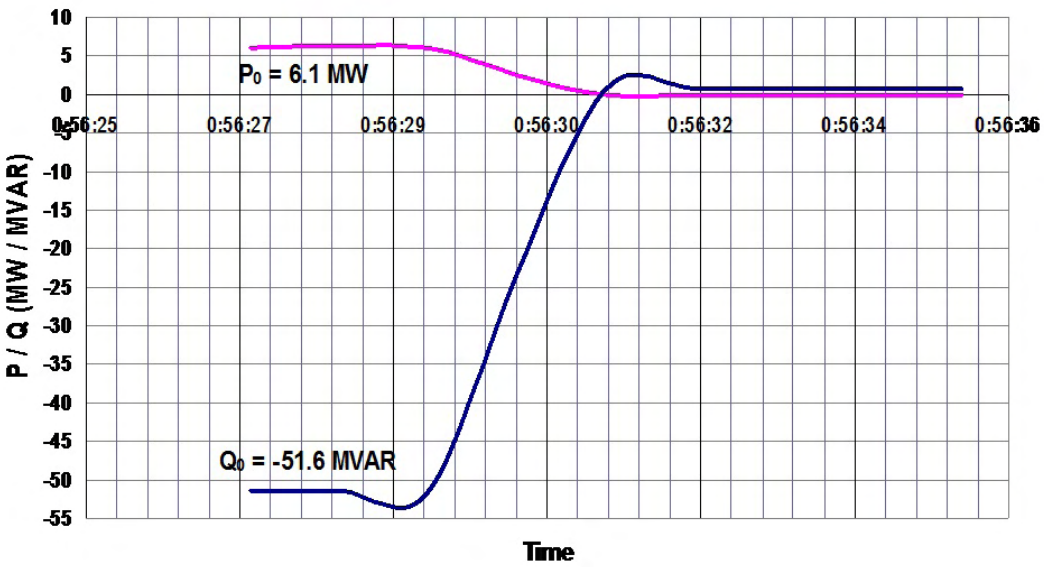

Fig 13 Zero Power Factor Trip Test (50MVAR, AVR in Auto mode)

Real and Reactive Power Plot

11.7 To Evaluate Direct Axis open circuit time constant (τ'_{do})

This can be evaluated by

(i) Voltage build up test

(ii) Zero power factor trip test

11.7.1 Voltage Build up test

(i) Status – Isolated

Test Conditions

(i) Change AVR to manual mode.

(ii) Maintain speed at 3000 rpm.

(iii) Start recording terminal voltage.

(iv) Close field breaker.

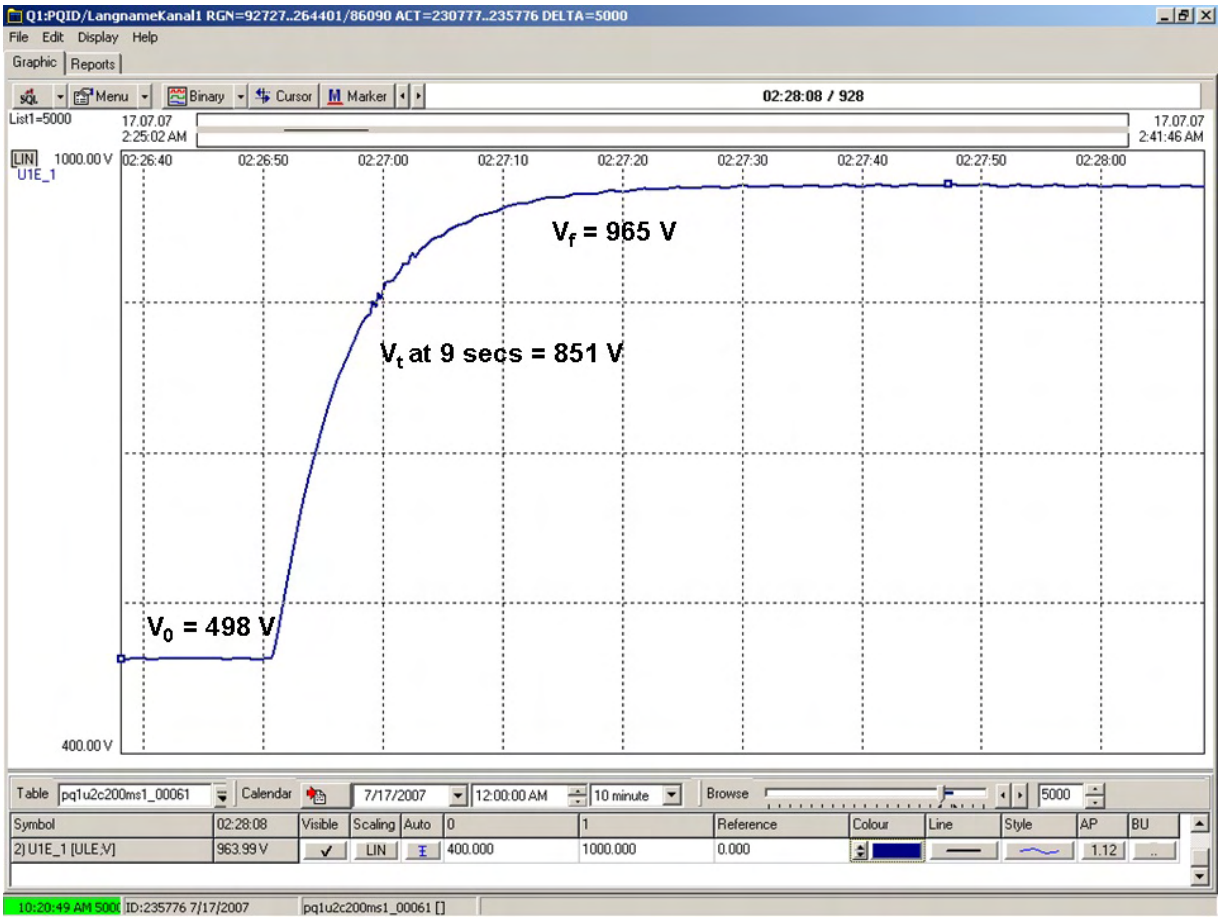

Fig 14 Voltage Build up Test after field breaker closing

Voltage Profile

Refer Fig. 14.

Parameter	Values
Initial Voltage, V_0	498 V
Voltage @ 9secs, V_t	851 V
Final Voltage, V_f	965 V

$V_t - V_0 = [\ (V_f - V_0)(1 - e^{-t/\tau})]$

Substituting the values,

Direct axis transient open circuit time constant, τ'_{do} = 6.4 secs

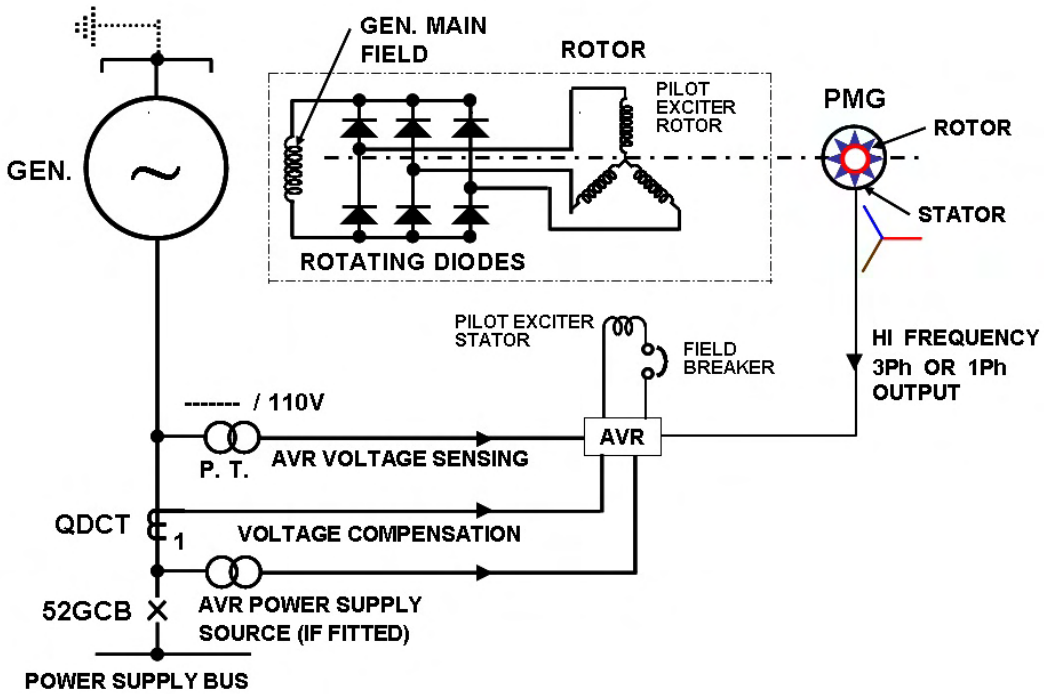

Fig 15 Brushless Excitation System (with PMG)

In brushless excitation system (Refer Fig 15), closing of filed breaker results in terminal voltage rising from a very low value (proportional to residual flux) to slightly higher value (proportional to PMG output). Since the terminal voltage is much lower than the rated value in this test, the time constant derived may not be that accurate.

11.7.2 Zero Power Factor Trip Test

(i) Status – Connected to grid

Test Conditions

(i) AVR in Manual mode

(ii) Real Power = 3.9 MW (Fig.17)

(iii) Reactive Power = -29.1 MVAR (Fig.17)

(iv) Trip generator circuit breaker

(v) Record all voltage and current parameters.

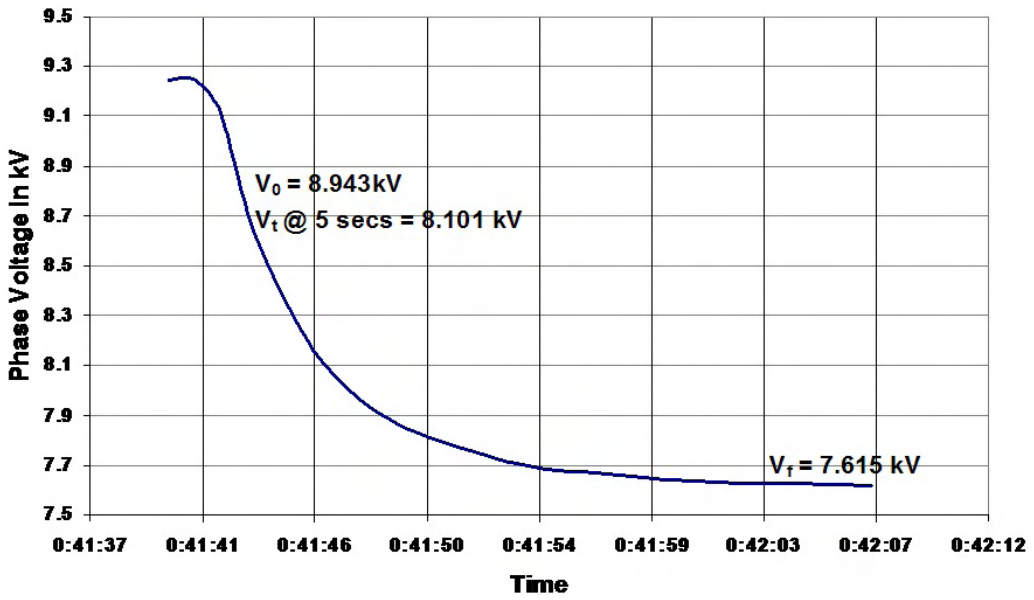

Fig 16 Zero Power Factor Trip Test (25 MVAR, AVR in Manual mode)

Voltage Profile

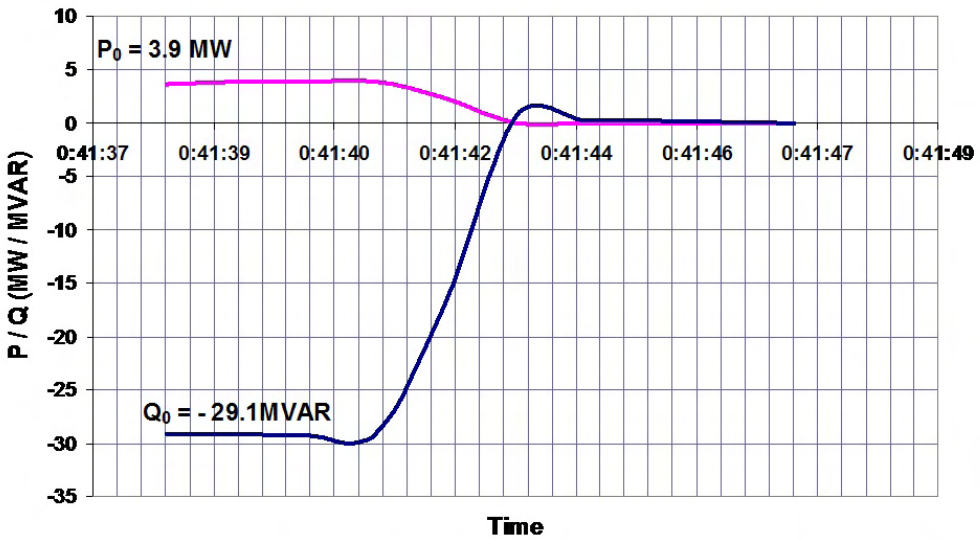

Fig 17 Zero Power Factor Trip Test (25 MVAR, AVR in Manual mode)

Real and Reactive Power Plot

Refer Fig. 16.

Parameter	Values
Initial Voltage, V_0	8.943 kV
Voltage @ 5secs, V_t	8.101 kV
Final Voltage, V_f	7.615 kV

$V_t = V_0 - [\ (V_0 - V_f)(1 - e^{-t/\tau})]$

Substituting the values,

Direct axis transient open circuit time constant, τ'_{do} = 4.97 secs

11.8 Field breaker trip Test

(i) Status – Isolated

Test Conditions

(i) Change AVR to manual mode.

(ii) Maintain speed at 3000 rpm.

(iii) Maintain terminal voltage to near rated voltage.

(iv) Trip field breaker.

(v) Record terminal voltage.

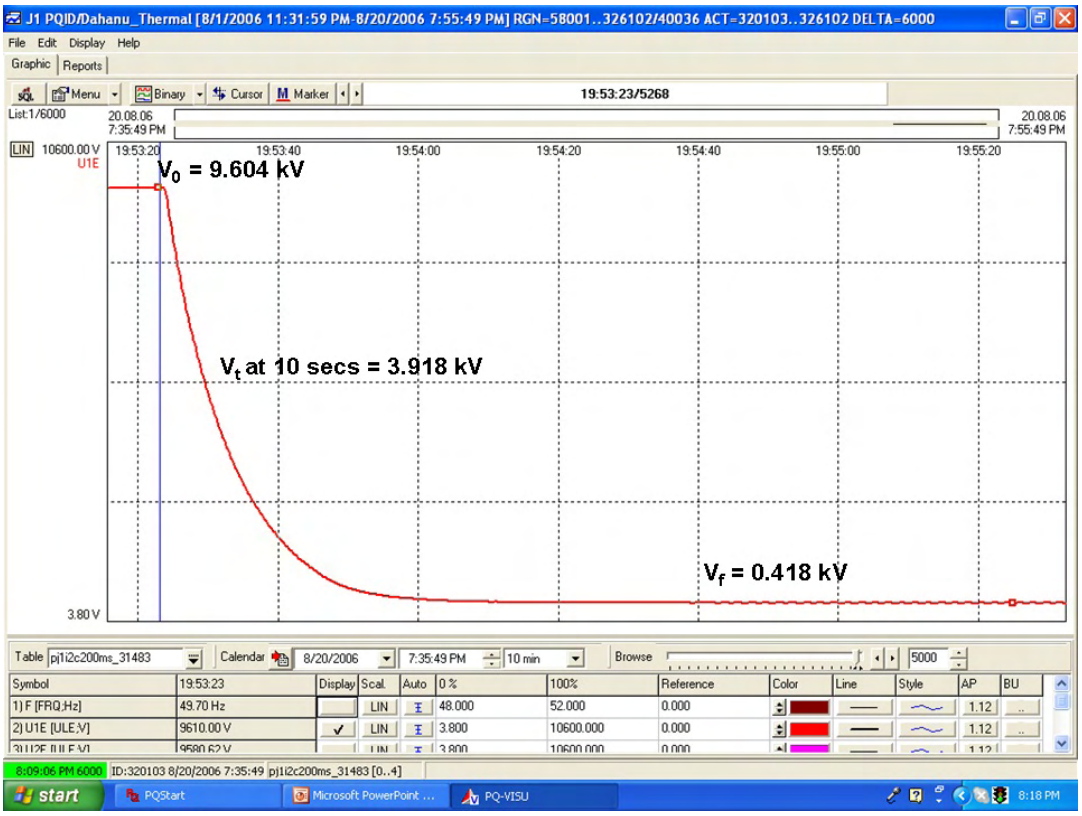

Fig 18 Field Breaker Trip Test

Voltage Profile

Refer Fig. 18.

Parameter	Values
Initial Voltage, V_0	9.604 kV
Voltage @ 10 secs, V_t	3.918 kV
Final Voltage, V_f	0.418 kV

$V_t = V_0 - [\ (V_0 - V_f)(1 - e^{-t/\tau})]$

Substituting the values,

Residual voltage decay time constant, τ = 10.4 secs

11.9 Governor Step Response Test (Step change of 2%)

(i) Status – Isolated

Test Conditions

(i) Maintain the machine speed at 3000 rpm.

(ii) Ensure AVR is in auto mode.

(iii) Keep governor in speed control mode

(iv) Apply a step change of 2% i.e., change speed from 3000 rpm to 3060 rpm.

(v) Record speed / frequency.

Command was given to increase 60 rpm (2%) in 6 secs (ramp). The machine speed attained 85% of desired value in 28 secs. Then in five minutes time, the machine slowly reached the final value. Refer Fig. 19 for frequency profile.

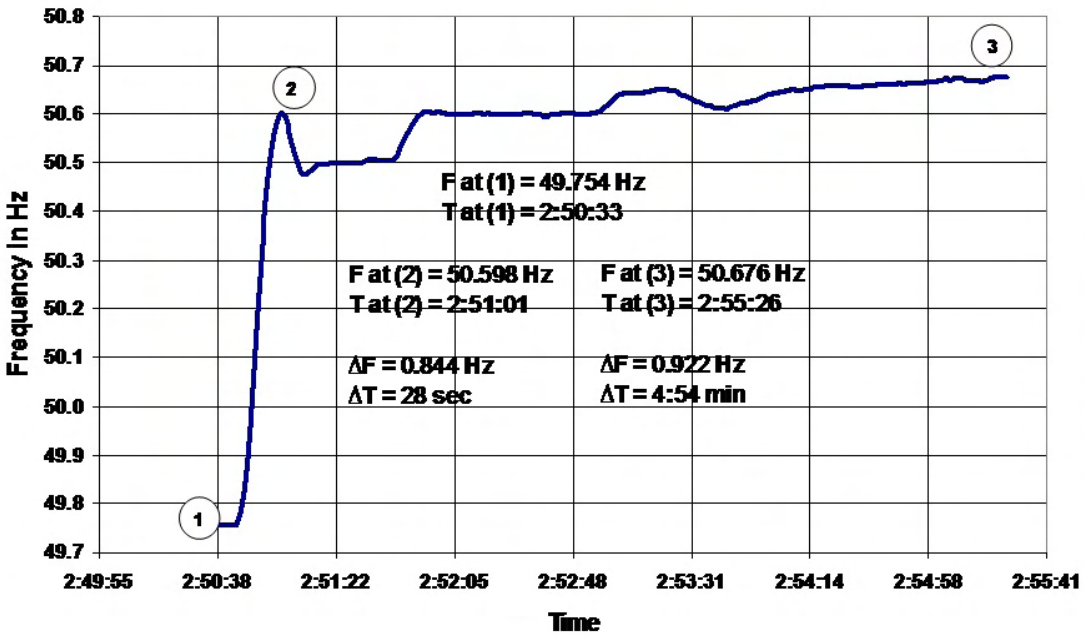

Fig 19 Governor Response Test (Step Change 2%)

Frequency Profile

11.10 Governor Step Response Test (Step change of (-) 25 MW)

(i) Status – Connected to grid. This test was done when the unit was taken out for scheduled maintenance.

Test Conditions

(i) Maintain terminal voltage to 16.5kV.

(ii) Keep AVR in auto mode.

(iii) Keep governor in droop mode.

(iv) At load say 150MW, apply step change of (-) 25MW.

(v) Record P, Q, Vt, Ia, frequency and control valve position.

(vi) A step change of (-) 25MW was initiated. The machine load changed in 15 secs. Refer Fig.20.

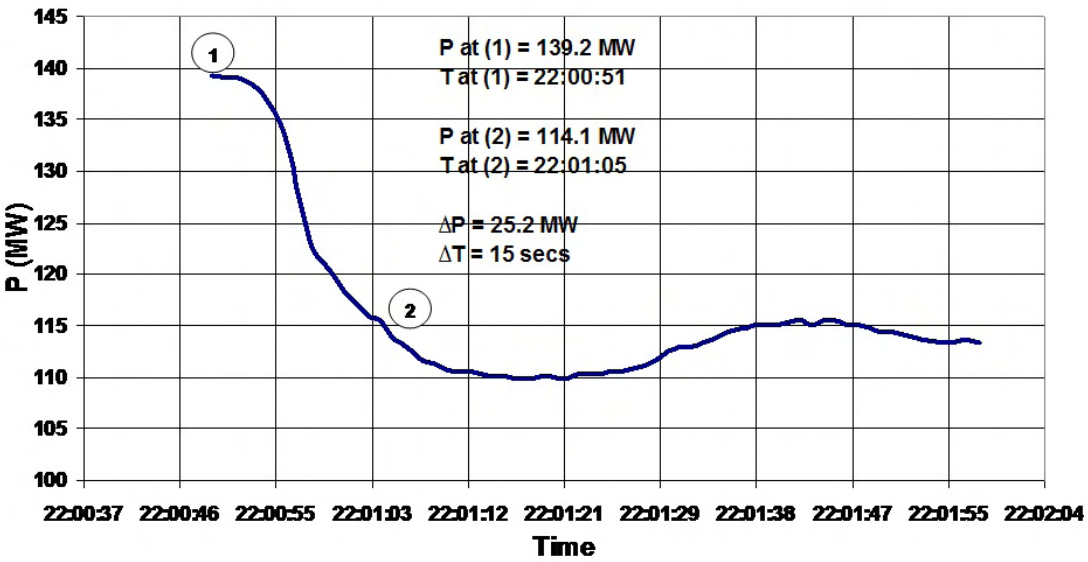

Fig 20 Governor Response Test (Step Change (-) 25 MW)

Real Power Plot

11.11 Governor Step Response Test (Step change of (+) 20 MW)

(i) Status – Connected to grid. This test was performed when bringing the unit to service after overhaul.

Test Conditions

(i) Normalize all protection settings.

(ii) Bring terminal voltage to 16.5kV.

(iii) Keep AVR in auto mode.

(iv) Keep governor in droop mode.

(v) Pick up load upto say 125MW.

(vi) Apply step change of (+) 20MW.

(vii) Record P, Q, Vt, Ia, frequency and control valve position.

A step change of (+) 20MW was initiated. The machine picked up increased MW in 60 secs. Refer Fig.21.

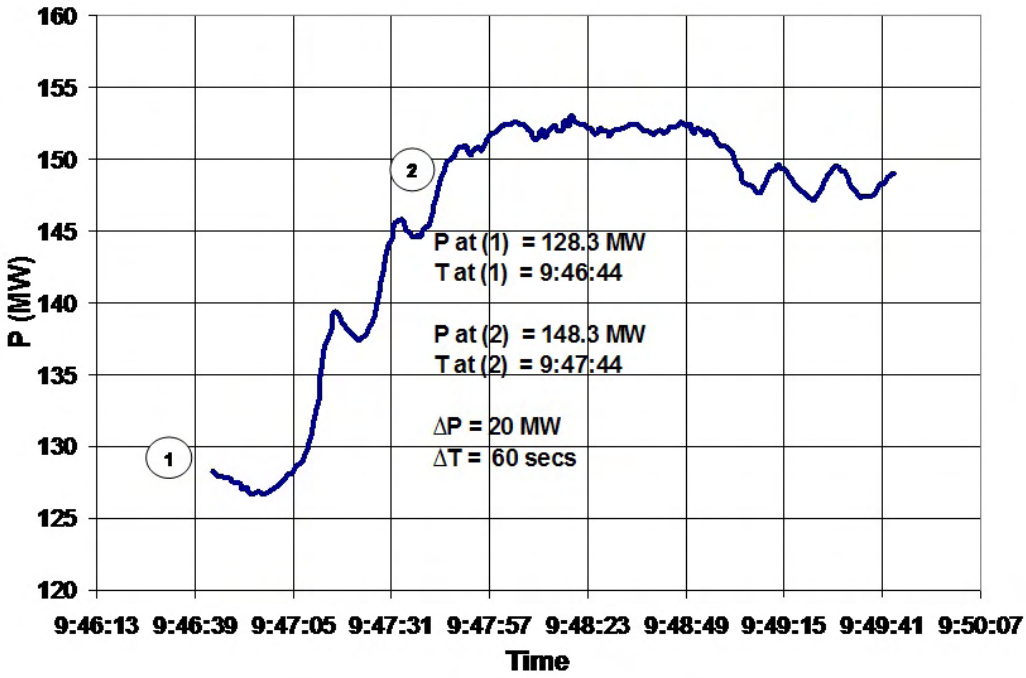

Fig 21 Governor Response Test (Step Change (+) 20 MW)

Real Power Plot

12.0 Conclusions

12.1 Design values are compared against test values:

Parameter	Design data	Calculated Test values
Saturation Factor	1.12	1.1
Unsaturated synchronous reactance, X_d	2.15 pu	2.188 (SCC Test) 2.208 (V Curve Test)
Saturated synchronous reactance, X_d	1.92 pu	1.989 (SCC Test)
Sub-transient reactance, X"d	0.2024 pu	0.2446 pu
Transient reactance, X'd	0.263 pu	0.3027 pu
Short circuit ratio	0.52	0.503
Direct Axis transient open circuit time constant, τ'_{do}	7.7 secs	6.4 secs (Voltage build up Test) 4.97 secs (ZPF test)
AVR response time to restore voltage	-----	1.03 secs
Inertia Constant, H	4.623 secs	6.22 secs
Transformer reactance , X_t	0.1449 pu	0.144 pu

12.2 Response of AVR and excitation system is as expected and satisfactory.

12.3 The field breaker trip test indicates residual voltage decay time constant of 10.4 secs. Thus it can be appreciated that for a fault on generator terminal or HV side of UAT, even after unit tripping, fault will continue to be fed for seconds that will result in fire/damage. Also it may be noted that during the test, initial terminal voltage was 100%. But when the generator circuit breaker opens on full load during faults, terminal voltage would rise to internal emf (ie 230%) and then with field breaker opening, the voltage will decay. Substantial voltage will be maintained to feed the fault for long time.

Incidentally, this fact has led to the development of hybrid grounding system for generator (Refer Fig 22).

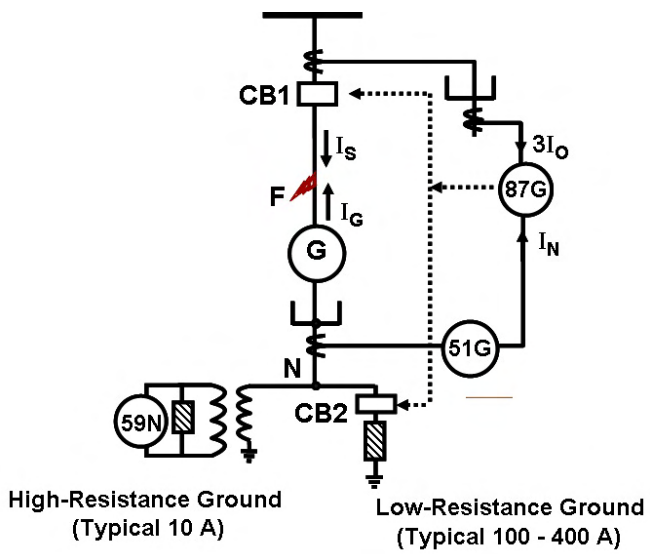

Fig 22 Hybrid grounding

13.0 Acknowledgement

Special thanks to Dahanu Thermal Power station operation and maintenance team, Mr. P. Majumdar, Mr. Prasad Rao and Mr. M. Bhadoria for their unstinted support in this challenging exercise.

ieema journal

Instrument Transformer Testing at site

Dr K Rajamani and Bina Mitra,

Reliance Infrastructure Ltd., MUMBAI

(August 2008, IEEMA Journal, Page 61 to 72)

ieema journal

Instrument Transformer Testing at site

Dr K Rajamani and Bina Mitra, Reliance Infrastructure Ltd., Mumbai

1.0 Introduction

Instrument transformer is in the forefront of system protection and metering train. Its correct functioning is of vital importance to successfully clear the fault in a selective manner and correct functioning of metering system. This article elaborates the electrical tests that are conducted at site to verify the healthiness of instrument transformer (current transformer and potential transformer) as well as correctness of wiring. Site acceptance tests are carried out during

(i) Commissioning during first installation

(ii) Maintenance testing during routine and breakdown maintenance

(iii) Auditing of existing installation.

To carry out this site tests high accuracy test kits are not required and laboratory standards are not being sought. There is no specific standard which spells out the requirement of site tests. The easy, appropriately accurate and low cost testing methods are discussed in this article.

2.0 Current Transformer Testing

Current Transformer consists of three main components: the winding, the core and the insulation. The tests described below checks integrity of these and the correctness of wiring.

2.1 Summary of Tests

Current Transformer Testing covers following tests:

(i) IR value measurement - Insulation check

(ii) Polarity check – Polarity marking check

(iii) Ratio check - Winding healthiness check

(iv) Excitation characteristic check – Core healthiness check

(v) Secondary winding and lead resistance measurement - Winding healthiness check

(vi) Secondary injection - CT circuit check

(vii) Primary injection - CT circuit check

2.2 IR Value Measurement

Before starting this test disconnect the CT secondary wiring and secondary earthing of all cores (Refer Fig.1).

August 2008, IEEMA Journal, Page 61 to 72

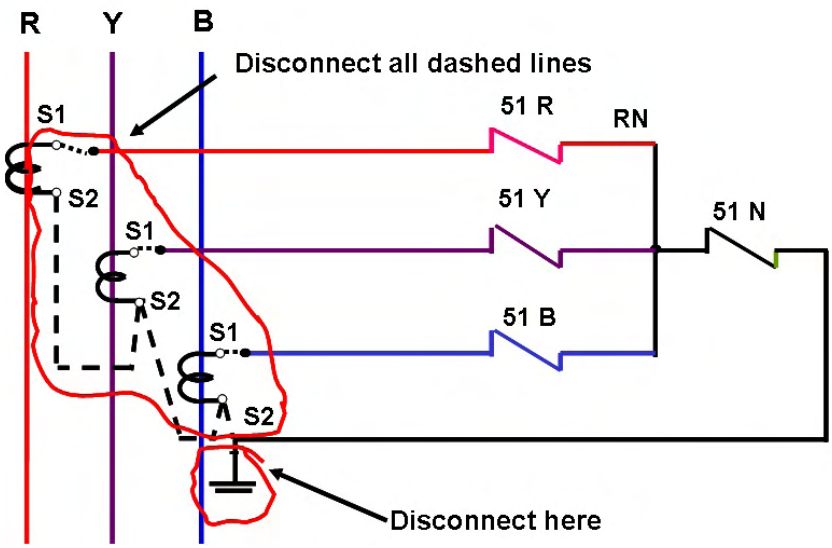

Fig 1 Typical CT Circuit

IR is measured between the following:

(i) *Primary to Earth*: Select the megger rating as per voltage class of CT. Generally 2.5kV or 5kV megger should suffice. The connection diagram is shown in Fig 2. The minimum acceptable value is (kV+1) MΩ. For example, for 11 kV CT, the value should be 12 MΩ or above.

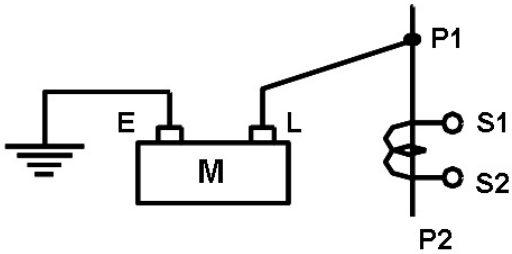

Fig 2 Primary to Earth

(ii) *Primary to Secondary*: Refer Fig 3. As in (i), the minimum acceptable value is (kV+1) MΩ for this test as well.

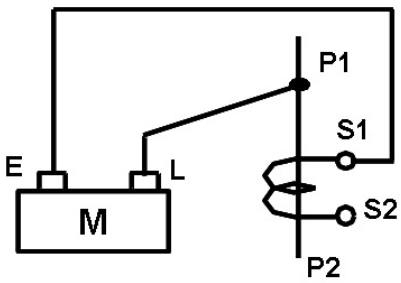

Fig 3 Primary to Secondary

(iii) *Secondary to Earth*: Refer Fig 4. The minimum acceptable value is 1 MΩ.

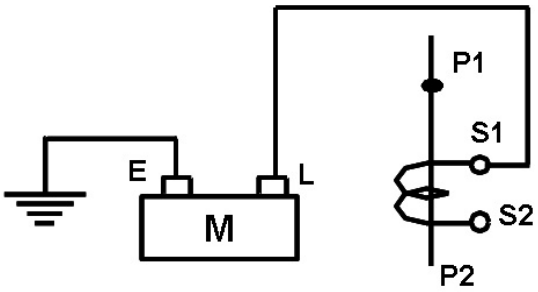

Fig 4 Secondary to Earth

(iv) *Core to Core*: Refer Fig 5. The minimum acceptable value is 1 MΩ.

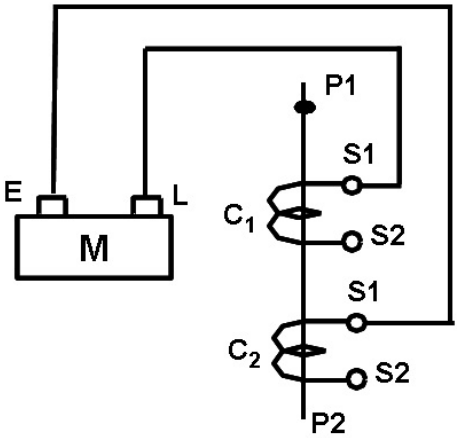

Fig 5 Core to Core

For tests (iii) and (iv), 500 V or 1 kV megger can be used. The tests shall be repeated for each secondary core.

2.3 Polarity Check

Discharge the primary fully before this test. Use healthy / charged 1.5V or 3V cell. Deflection is measured using AVO set in mA range. Refer Fig 6 for set up. Momentarily touch lead connected at P1 to positive of the cell, AVO will show positive (clockwise) deflection. Meter will show negative (anti-clockwise) deflection when the cell is disconnected. This confirms that S1 terminal on secondary side is positive when P1 terminal on primary side is positive at the same instant. Repeat the test for all the cores. Short other CT cores, not under test, in case of multicore CT.

Do not connect the battery cell to the primary for a long time.

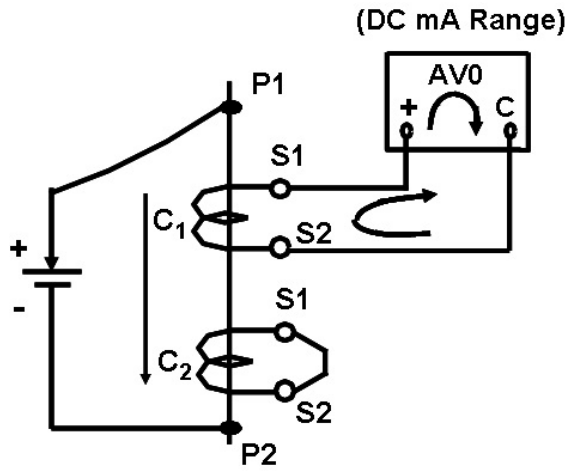

Fig 6 Polarity Test

2.4 Excitation (Saturation) Characteristic Check

This is the critical test to verify the magnetic healthiness of the CT. A saturated CT renders the protection useless even if sophisticated numerical relays are used. It is also useful to resolve any mix-up in metering and protection cores at site. The test set up is shown in Fig 7.

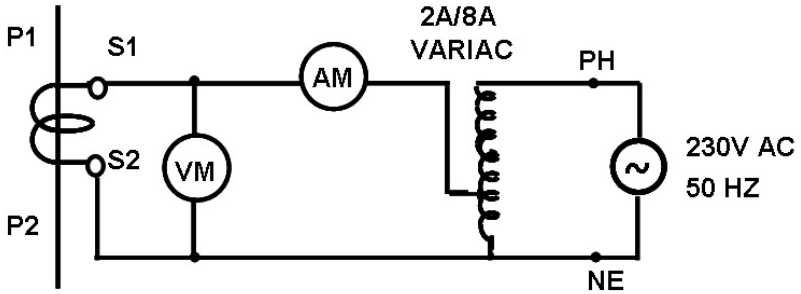

Fig 7 Excitation Test

A 230V single phase variac is used to apply voltage on secondary side of CT. Increase the voltage gradually and measure the current. Continue the test till KPV (Knee Point Voltage) is reached. Do not exceed the CT rated current (1A or 5A). A typical satcurve is shown in Fig 8. Applied voltage is plotted on Y axis and resultant exciting current is plotted on X axis. KPV is defined as that point at which 10% increase in voltage results in 50% increase in exciting current. Below KPV, the relationship between voltage and current is linear. Above KPV this linearity is destroyed. Even for a small increase in voltage the resultant current is excessive. In a saturated CT most of the primary ampere turn (AT) is consumed in exciting the core with little output on secondary. This may lead to core damage.

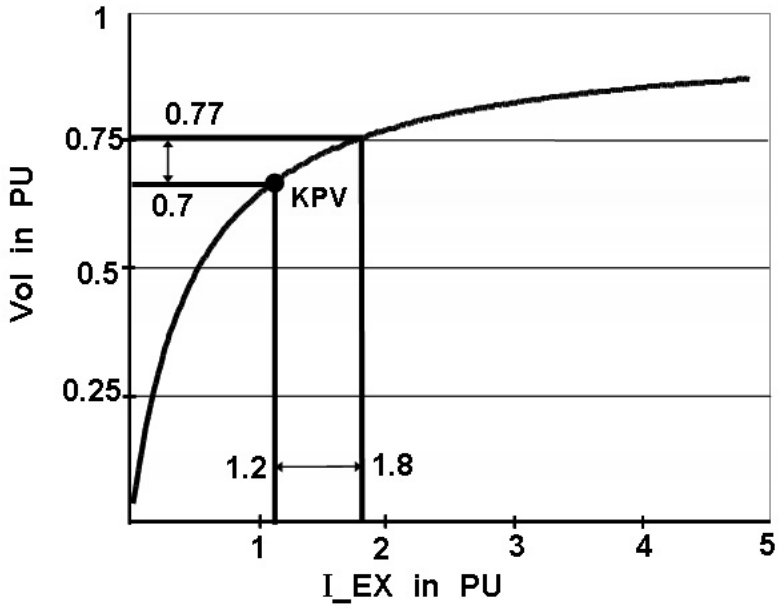

Fig 8 Saturation Curve

Following points are to be noted before the test:

(i) For class PS CTs, note Knee Point Voltage (KPV) and I_{EX} (exciting current) at V_K / 4 or V_K / 2 where V_K is the Knee Point Voltage (KPV). Typically I_{EX} is less than 30 mA at V_K / 4 for 1A CT and 150 mA at V_K / 4 for 5A CT.

(ii) For a protection class CT, KPV is not specified directly. KPV has to be derived from the specified ALF, burden and CT rated current. The minimum design value of KPV is given by,

$$V_{DESIGN} = \frac{\textit{Burden x Accuracy Limit Factor } (A.L.F)}{I_{RAT}\textit{(Secondary)}}$$

While carrying out the test following are to be ensured:

(i) Readings for the three phases on the same core shall be nearly equal (need not be identical). To make this comparison easy, measure the exciting current at the same voltage for all the three phases.

(ii) KPV of metering core in general will be less than that of protection core. Otherwise a mix up of metering and protection cores is indicated.

The excitation characteristic is illustrated with typical test results for a three core CT with following specification:

Metering: Ratio – 1600/5A, Cl. 0.5, 15VA

Protection: Ratio – 1600/5A, Cl. 5P20, 20VA

Differential: Ratio – 1600/5A, Cl. PS, Vk > 130, I_{EX} < 150mA @ Vk/2, Rct < 0.8 ohm

The test results are given In Tables 1.

Table 1					
Special Protection Class		**General Protection Class**		**Metering Class**	
1600/5A, Cl. PS, Vk > 130, Ie < 150mA @ Vk/2, Rct < 0.8 ohm		1600/5A, Cl. 5P20, 20VA		1600/5A, Cl. 0.5, 15VA	
Volts	Current (mA)	Volts	Current (mA)	Volts	Current (mA)
10	10	10	5	6	5
75	42	40	12	10	7
130	71	80	20	20	12
143	85	120	33	**30 (V_k)**	**22**
158 (V_k)	**111**	**171 (V_k)**	**77**	33	33
174	181	190	132		

From Table 1 following can be concluded:

(i) KPV of metering core is 30V. 10% increase in voltage (30V to 33V) results in about 50% increase in exciting current (22mA to 33mA).

(ii) KPV of protection core is 171V. The actual KPV (171V) is higher than the designed value (80V) as desired.
(Design value of KPV = ALF (20) x Burden (20)/ CT rating (5)).

(iii) From (i) and (ii), KPV of metering core is significantly less than that of protection core as expected.

(iv) Test values for differential core are also given. The KPV is 158V (above the specification requirement of 130V). I_{EX} is less than 150mA at 75V (V_k/2) as called for in the specification.

(v) The site test results indicates that the exciting current for a protection class CT could be less than that of a Class PS CT and can have higher knee point voltage compared to a Class PS CT.

Table 2 shows typical tests results for differential CT with specification:

200/1; Class – PS; KPV > 50V, I_{EX} < 30mA @ Vk/2, Rct < 1 ohm.

The KPV is 55V (above the specification requirement of 50V). I_{EX} is less than 30mA at 25V as called for in the specification.

Table 2					
R Phase		Y Phase		B Phase	
V_EX Volts	I_EX mA	V_EX Volts	I_EX mA	V_EX Volts	I_EX mA
10	15	10	14	10	15
20	18	20	17	20	19
25	22	25	21	25	23
30	31	30	30	30	32
40	42	40	41	40	43
50	58	50	58	50	60
55	70	55	69	55	70
60	104	60	103	60	106
Class PS : KPV: 55V					

Typical test values for a healthy CT, saturated CT and failed CT are given in Table 3. The corresponding excitation curves are shown in Fig 9.

Table 3					
Healthy CT		Saturated CT		Failed CT	
V_EX: Volts	I_EX: mA	V_EX Volts	I_EX mA	V_EX Volts	I_EX mA
50	8	5	30	0.1	15
60	11	7	50	0.3	40
150	25	10	140	0.5	500
170	32	12	300		
175	34	20	900		
185	48				

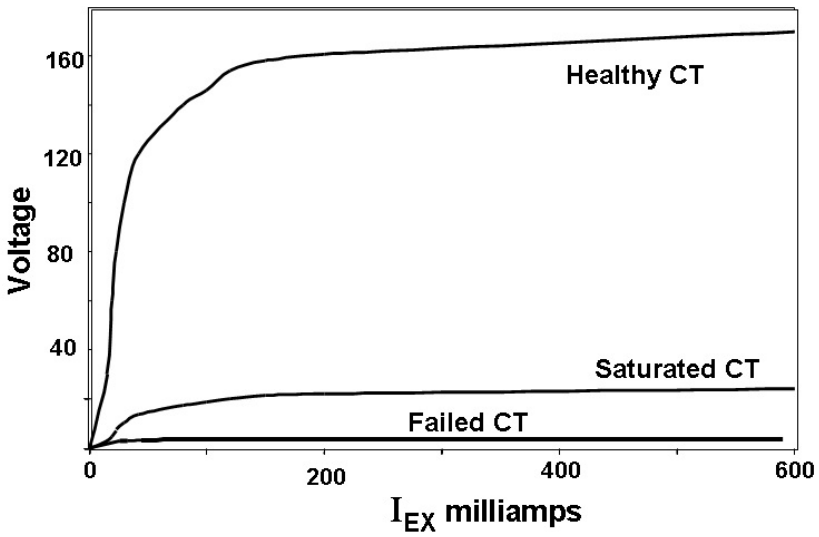

Fig 9 CT Healthiness Test

If the current increases rapidly even when a very small voltage is applied (e.g. 500mA at 0.5V) abort the test as it indicates insulation failure and the failed CT is discarded. In case of saturated CT steep increase in exciting current occurs at a voltage much below expected KPV. Sometimes desaturation of saturated CT is attempted at site. The procedure is as follows:

(i) Gradually increase the voltage to pass rated current on secondary (say 1A)

(ii) Gradually decrease the voltage to zero.

(iii) Initially even at low voltage CT may take rated current

(iv) Repeat the above cycle 50 to 100 times. Each time observe that rated current is drawn at higher and higher voltages.

(v) When performing the above test, do not apply large voltage suddenly or switch off the supply abruptly. Increase or decrease in voltage shall be smooth and gradual.

(vi) If near to original KPV could be obtained, desaturation is successful.

Following recommendations are made for use of desaturated CT:

(i) Avoid using desaturated CT for protection core. Desaturated CT is vulnerable and may fail when it sees the fault current next time. It can be retained till replaced by a new CT.

(ii) Desaturated CT for metering core in general can be retained for a long time if accuracy is monitored periodically. However, if the core is connected to tariff meters, it shall be replaced by a new one at the earliest opportunity.

2.5 Ratio Check

This test is for rough ratio check. Refer Fig 10A for set up.

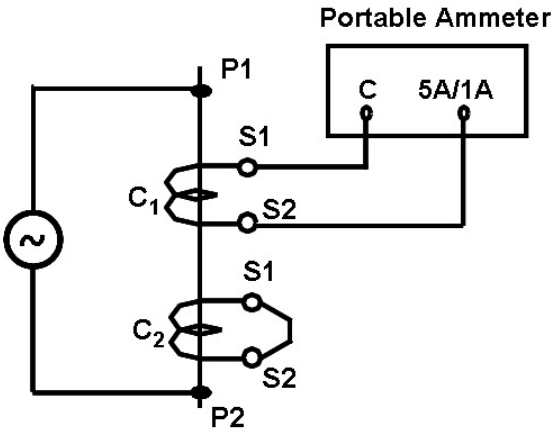

Fig 10A Ratio Test

Disconnect CT secondary connections. Short other CT cores, not under test, in case of multicore CT. Use portable multimeter that measures true RMS current and primary injection set that delivers high current at low voltage. Typical rating of the kit:

Input - 230V, 3KVA, single phase loading transformer

Output – 250A at 12V, 500A at 6V, 1000A at 3V

Inject current on the primary and measure current on the secondary and check ratio. It is *not mandatory* to do the test at rated primary current. Eg: For 3000/1 CT, testing at 500A is sufficient.

The ratio error is calculated as follows:

$$\textit{Ratio error} = \left[\frac{(I_P - K_N I_S)}{I_P}\right] x\ 100$$

Example: CT ratio – 1000/1; Ideal Ratio K_N = 1000

Injected I_P = 500A; Measured I_S = 0.49A

$$\textit{Ratio error} = \left[\frac{(500 - (1000 x 0.49))}{500}\right] x\ 100$$

$$= 2\%$$

2.5.1 Voltage measurement method

(We acknowledge Mr. Patrick Hawes of Transformer Test Instruments, SA for his suggestions)

This test is for ratio check by measuring primary voltage when voltage is applied to secondary. This test works on the transformer principle that:

$\frac{V_p}{V_S} = \frac{N_p}{N_S}$; where Vp and Vs are Primary and Secondary voltage, Np and Ns are primary and secondary turns respectively.

For bar primary CT, Np = 1, therefore $V_p = \frac{V_S}{N_S}$

This indirect method of testing checks the integrity of windings from the ankle point to the knee point and beyond covering the entire measurement range faced by the CT in practical situation. Constant ratio through out the measurement range indicates CT windings are healthy.

Knee point voltage (V_k) *of CT* = $2 I_F (R_{CT} + 2 R_L)$

Under normal conditions, voltage across CT

$V_{CT} = I_{RAT}(R_{CT} + 2\,R_L)$

$$= V_k\left(\frac{I_{RAT}}{2I_F}\right)$$

e.g. - $= \frac{I_{RAT}}{2I_F} = \frac{800\ A}{2x8000A}$

$= 0.05 \Rightarrow 5\%$

As seen from above, under healthy conditions, voltage required to be developed by CT is only 5% of the knee point voltage.

The advantage of this method is that even by applying a small voltage across secondary, the voltage developed across CT under fault conditions can be simulated and CT windings healthiness for worst conditions can be checked.

The direct current measurement method explained earlier, checks the thermal capability of the winding upto the rated current which is not the intent of the test. In current measurement method, there is no voltage stress on the secondary insulation which is actually developed across the CT under fault conditions. It is very difficult to inject very high current to get near knee point voltage as the injection kits in such cases will be very bulky.

Refer Fig 10B for test set up. Disconnect CT secondary connections and keep primary open. Use portable mili-voltmeter and 230V single phase variac to apply voltage on secondary side of CT. Increase the voltage gradually and measure primary voltage, secondary voltage and current and continue till the rated current is reached. This test can be combined with Excitation Characteristic check explained earlier.

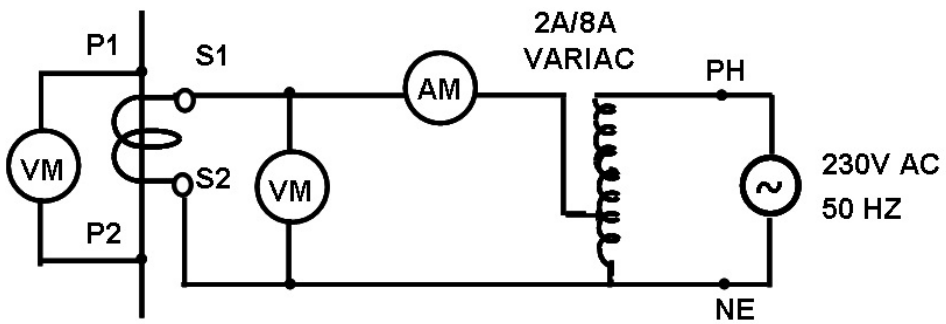

Fig 10B Ratio Test – Voltage Measurement Method

Test was conducted on a Class PS CT with following specification: 800-1600/1A, Cl PS, Rct ≤ 5 Ω, Vk ≥ 100V, Iex @ Vk/4 ≤ 30 mA. Test was carried out to check both ratio and excitation characteristics at 800/1A CTR. Test results are given in Table 4. Refer Fig. 10C and 10D. The figures indicate healthiness of CT as the CT ratio is constant from normal operating point to knee point and beyond knee point.

In this case, primary current injection for ratio check is obviated. Field engineers, used to ratio test by high current injection on primary side, must overcome this psychological barrier and accept primary voltage measurement method.

Table 4

Sec. Voltage applied (Vs), Volts	Excitation current (Iex), mA	Measured Pri. voltage (Vp), Volts	Pri. voltage (Calc. = Vs/Ns), Volts	Remarks
10	2	0.013	0.013	
25	4	0.032	0.031	Results @ Vk/4. Iex < 30mA
50	6	0.065	0.063	
75	8	0.093	0.094	
100	12	0.127	0.125	
115	16	0.145	0.144	
126	21	0.159	0.158	
138	30	0.174	0.173	Kpv = 138V as against design Kpv = 100V
151	47	0.189	0.189	
170	940	0.213	0.213	

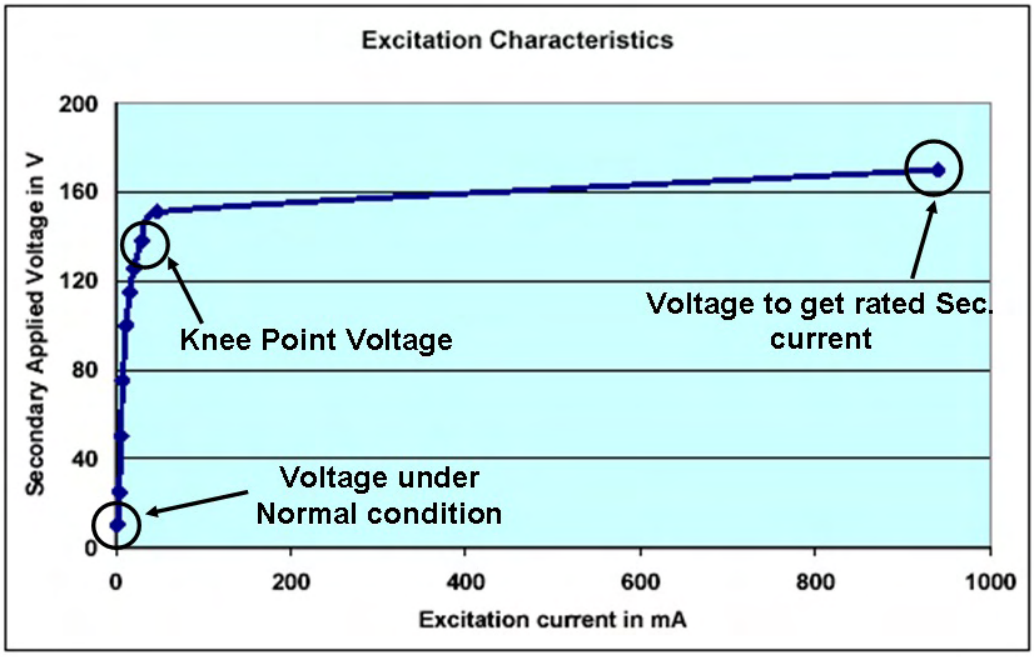

Fig 10C CT Excitation Characteristics

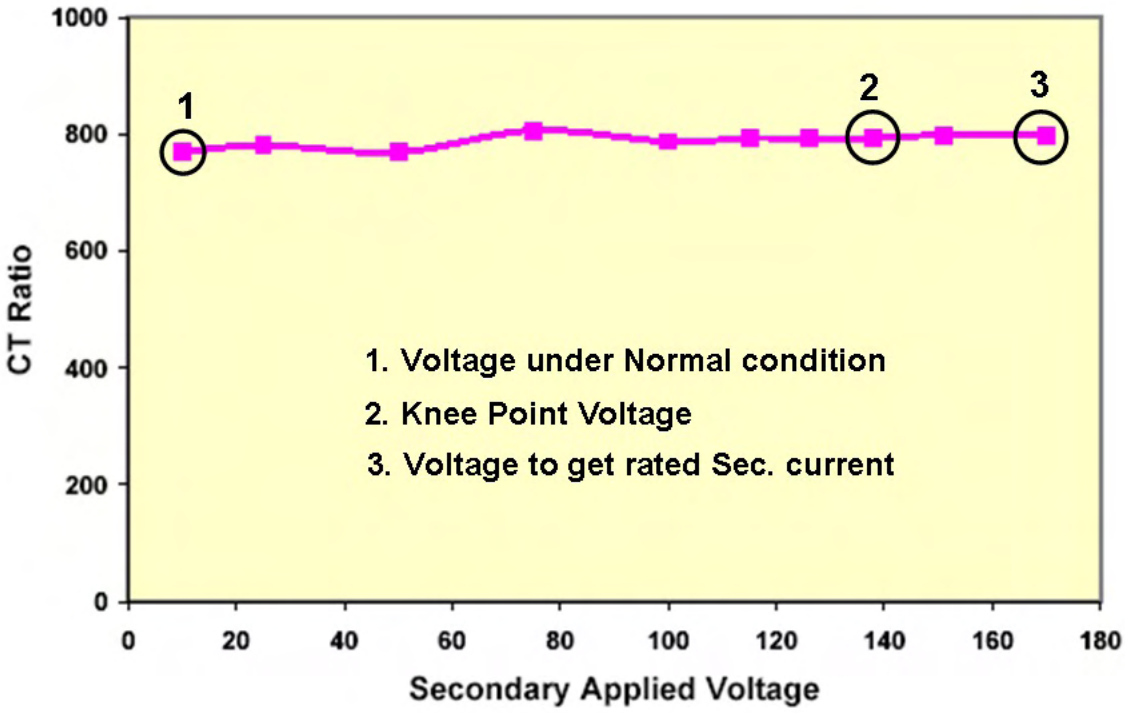

Fig 10D CT Ratio Test – Voltage Measurement Method

2.6 Secondary and lead resistances

CT secondary resistance (R_{CT}) and lead resistance (R_L) can be measured using low resistance micro-ohmmeter. The test set up is shown in Fig 11. For class PS CTs, R_{CT} should be less than the specified value. Also R_{CT} should not be significantly different for the three phases of the same core. Values of R_{CT} and R_L are used in calculation of KPV and stabilizing resistor value in high impedance differential scheme.

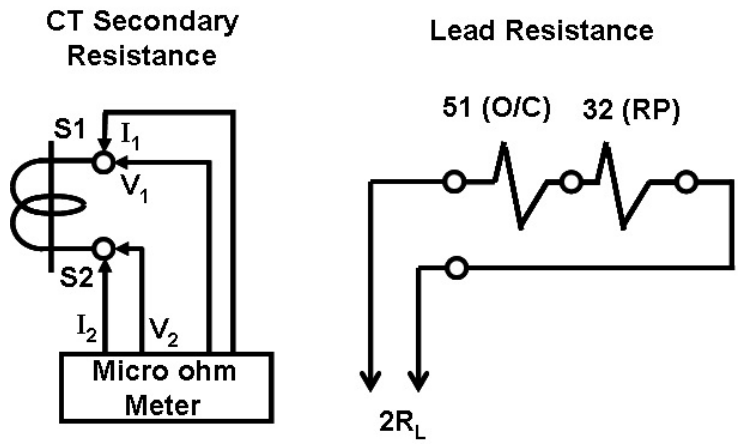

Fig 11 Secondary Winding and Lead Resistance Measurement

2.7 Secondary Injection test

This test verifies correctness of wiring from CT secondary terminals to relay terminals. A current source of 10A will be adequate for secondary injection. In this test no current flows through either primary or secondary of CT. When performing this test, disconnection is required only at S_1 terminals but loop connection of S_2 terminals can be retained. Refer Fig 12 to 17. Initially inject current in R, Y and B phases and observe relay or meter current / operation. For R phase current injection, only R phase relay (51R) and ground relay (51N) should respond and relays on Y and B phases should not respond. Then inject current between phases. For (R-Y) injection, only 51R and 51Y should respond and 51B and 51G should not respond. No abnormality is indicated if current distribution is as per Table 5.

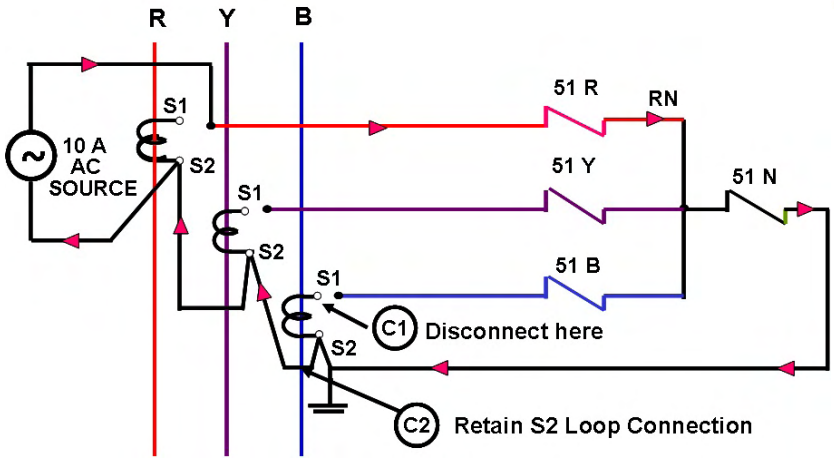

Fig 12 Secondary Injection – R Phase

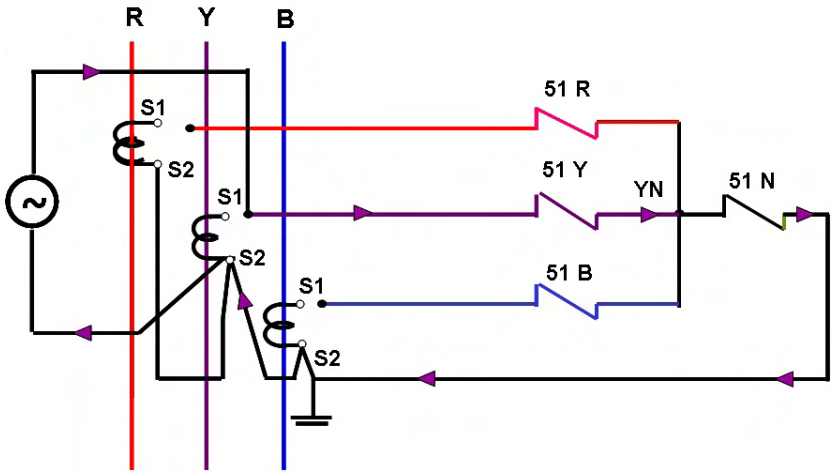

Fig 13 Secondary Injection – Y Phase

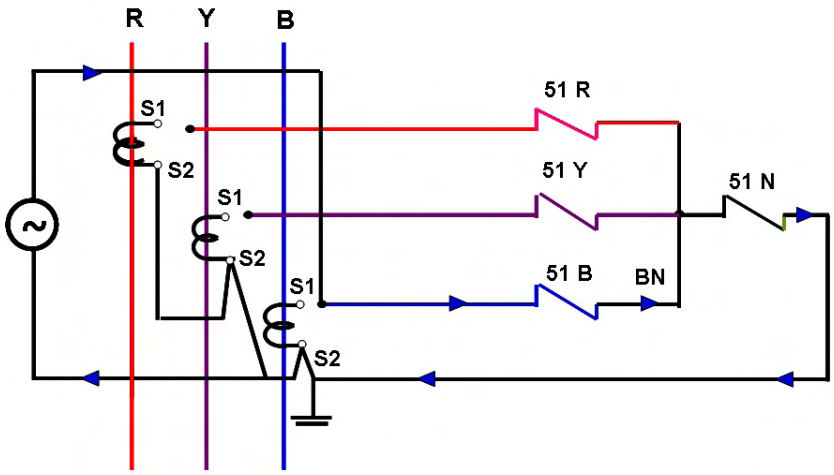

Fig 14 Secondary Injection – B Phase

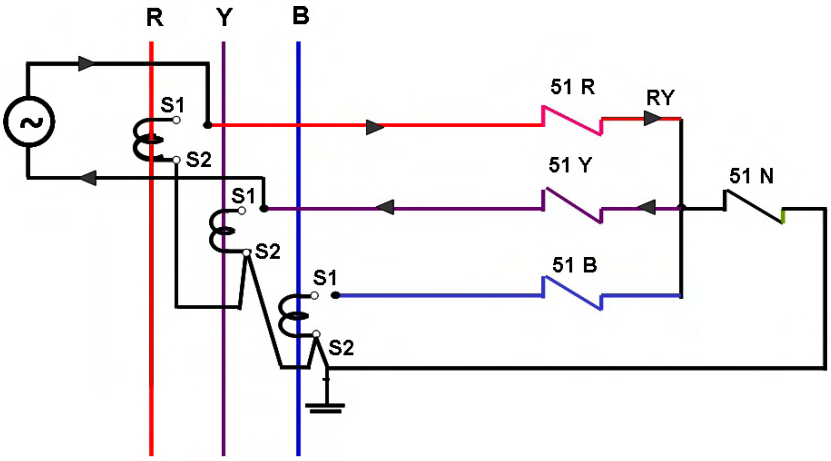

Fig 15 Secondary Injection – RY

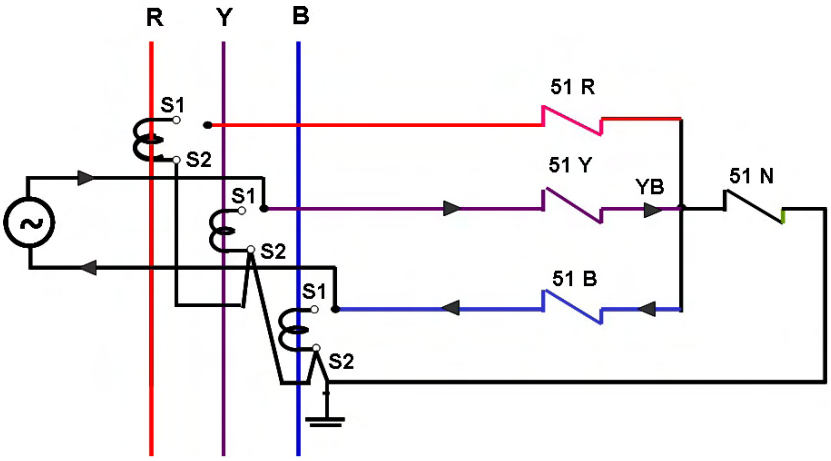

Fig 16 Secondary Injection – YB

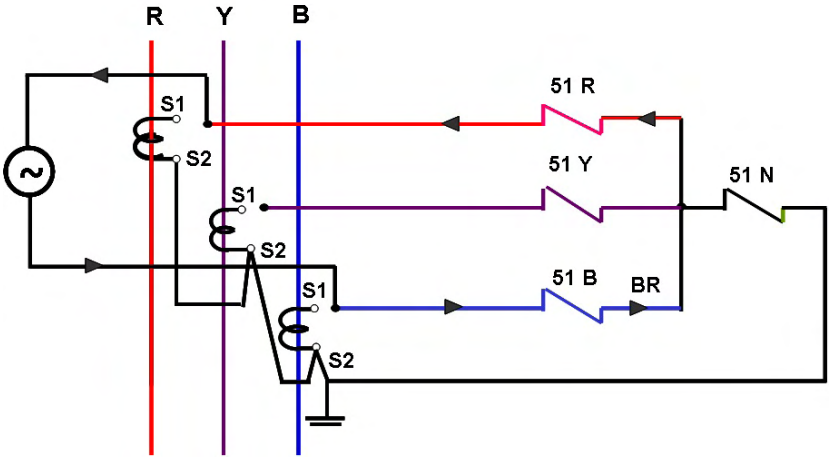

Fig 17 Secondary Injection – BR

Table 5				
Injected Current	Relay Operation or Measured Current in Phases			
Phase	51R	51Y	51B	51N
RN	Yes	No	No	Yes
YN	No	Yes	No	Yes
BN	No	No	Yes	Yes
RY	Yes	Yes	No	No
YB	No	Yes	Yes	No
BR	Yes	No	Yes	No

2.8 Primary Injection test

This test verifies correctness of connection from primary side of CT to relay terminals on the secondary side of CT. Any wrong polarity in CT connection also gets verified. If ratio check is done with voltage measurement, then this is the only test that needs primary injection. Since the purpose of this test is only wiring check, it can be performed at a current much lower than rated current.

The typical rating of primary injection kit is as flows (similar to that used for ratio check test):

Input - 230V, 3KVA, single phase loading transformer

Output – 250A at 12V, 500A at 6V, 1000A at 3V

The connections for R phase, Y phase and B phase injection are shown in Fig 18 to 20. The connections for phase to phase injection are shown in Fig 21 to 23. No abnormality is indicated if current distribution is as per Table 5.

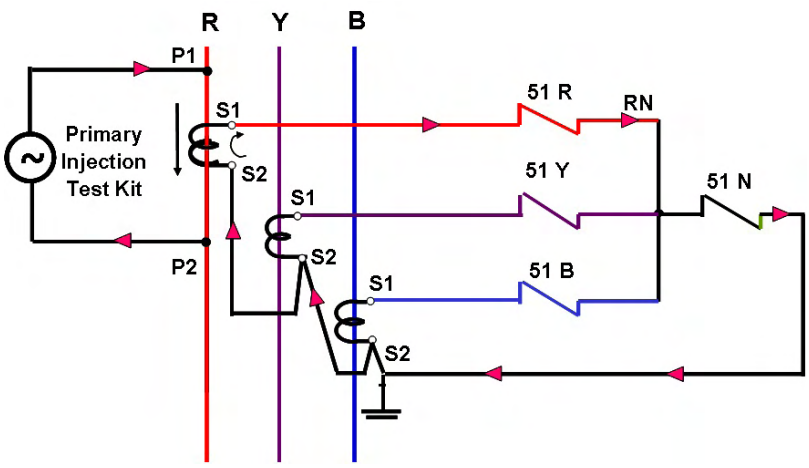

Fig 18 Primary Injection – R Phase

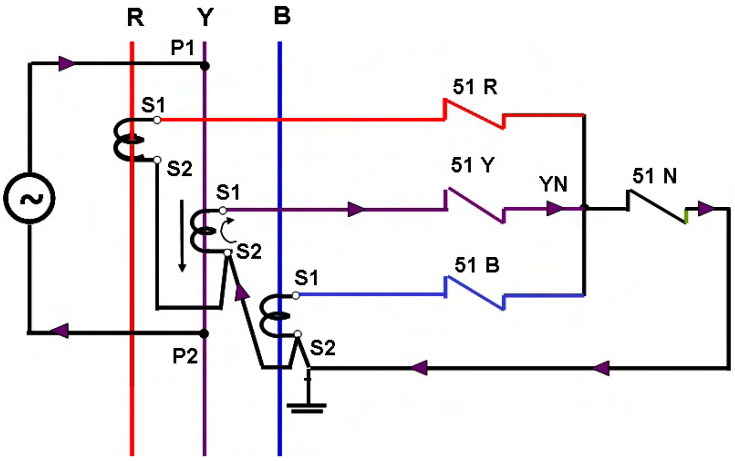

Fig 19 Primary Injection – Y Phase

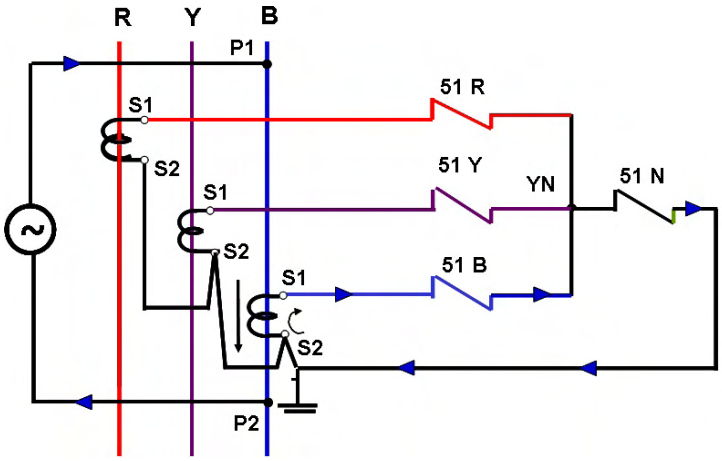

Fig 20 Primary Injection – B Phase

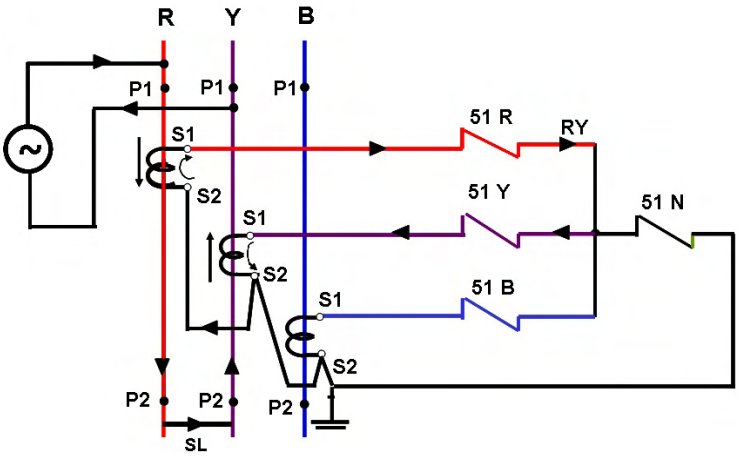

Fig 21 Primary Injection – RY Phase

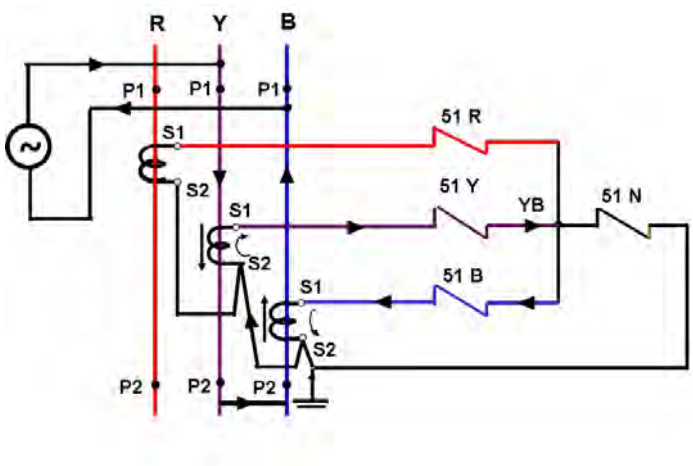

Fig 22 Primary Injection – YB Phase

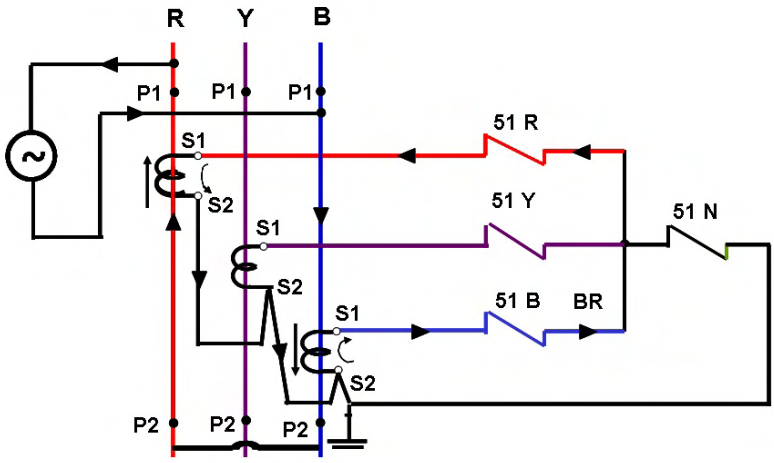

Fig 23 Primary Injection – BR Phase

If there is wrong polarity in connection then there is neutral current during phase to phase current injection. Assume polarity markings on Y phase CT are wrong. In Fig 24, current distribution for (R-Y) injection is shown. Current flows through 51R and 51Y and almost twice the current flows through 51N clearly indicating wrong polarity or connections.

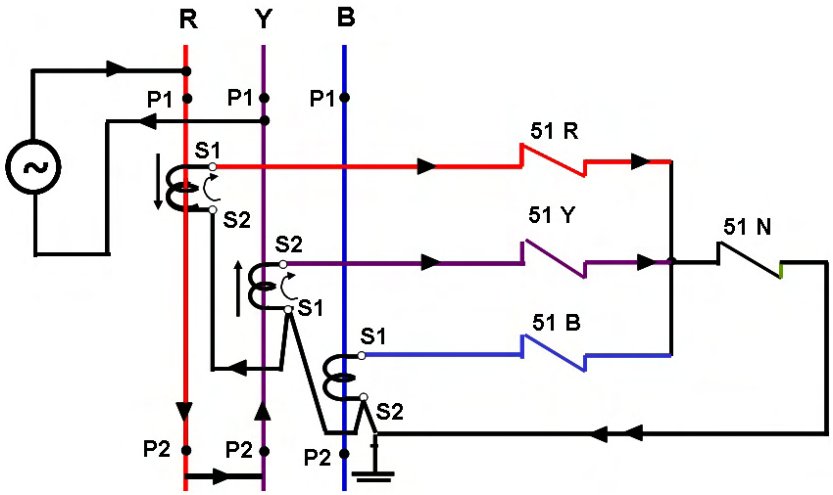

Fig 24 Wrong CT Polarity

3.0 Potential Transformer Testing

Potential Transformer Testing cover following tests:

(i) IR measurement - Insulation check

(ii) Polarity check – Polarity marking

(iii) Ratio check – Healthiness of winding check

(iv) Secondary injection testing of metering and protection winding - Wiring check.

(v) Combined primary and secondary injection testing of metering and protection winding – Wiring check.

3.1 IR Measurement

Disconnect PT secondary circuit wiring. Disconnect PT primary and secondary neutral earthing. Connect the test setup as per Fig. 25 to 28 for various IR measurements. IR measurements to be done for

(i) Primary to earth

(ii) Primary to Secondary

(iii) Secondary to earth

(v) Winding to Winding

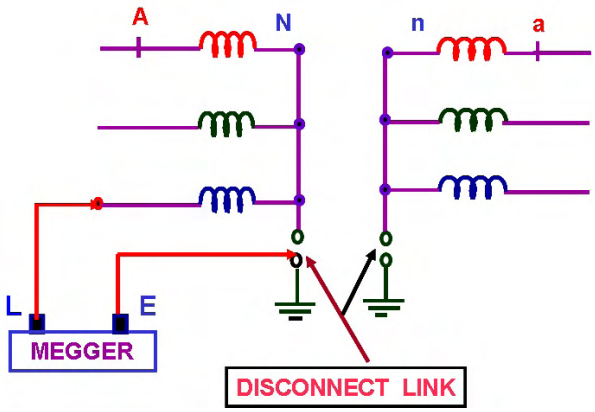

Fig 25 Primary to Earth

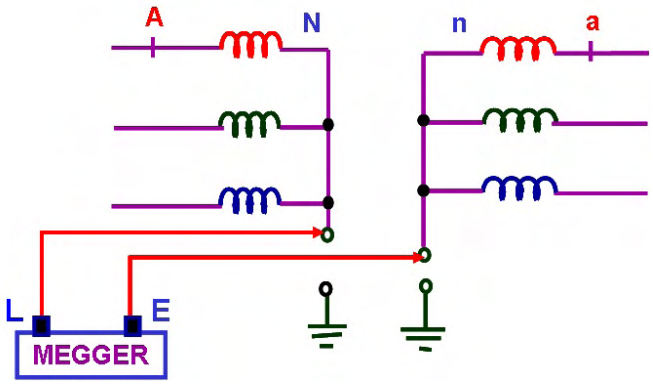

Fig 26 Primary to Secondary

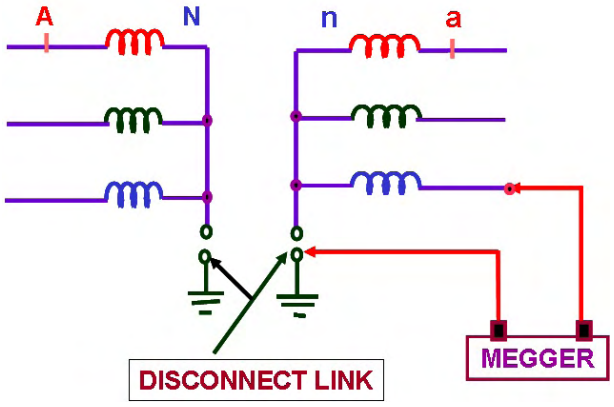

Fig 27 Secondary to Earth

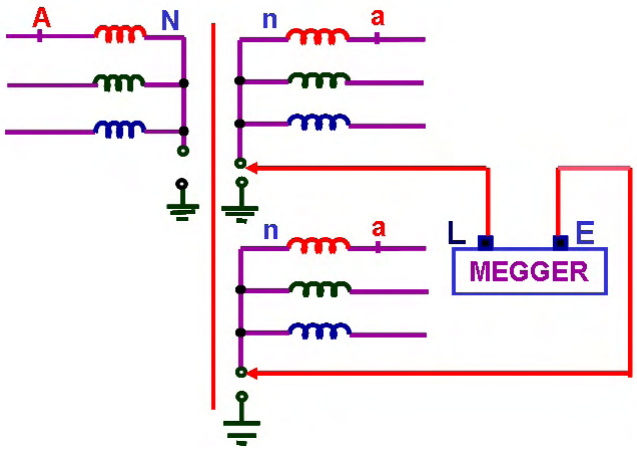

Fig 28 Winding to Winding

The procedure and acceptance criteria are same as that for a current transformer. Reconnect the primary and secondary neutral earthing after all the IR measurements are done. Verify by meggaring that the value is zero.

3.2 Polarity Checks

Isolate PT from main bus and disconnect PT secondary circuit before testing. Connect the test setup as per Fig. 29. The procedure to be followed is same as that for a current transformer. The test is to be repeated for all phases and all windings except open delta winding.

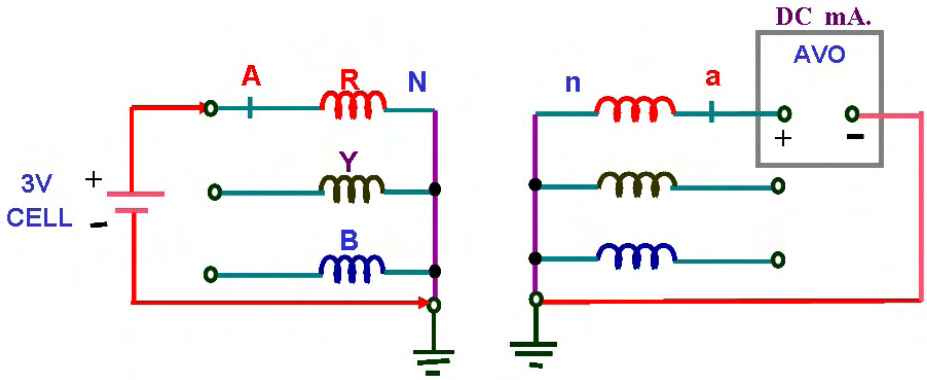

Fig 29 Polarity Check

3.3 Ratio Checks

3.3.1 Ratio check for star winding

Isolate PT primary from main bus and PT secondary circuit. Before starting the testing ensure primary and secondary earthing connections are firm. Arrange the

test setup as per Fig. 30A. Apply 3 phase, 415V gradually on PT primary side. Measure voltage at primary and secondary terminals. Check PT ratio vis a vis the PT specification.

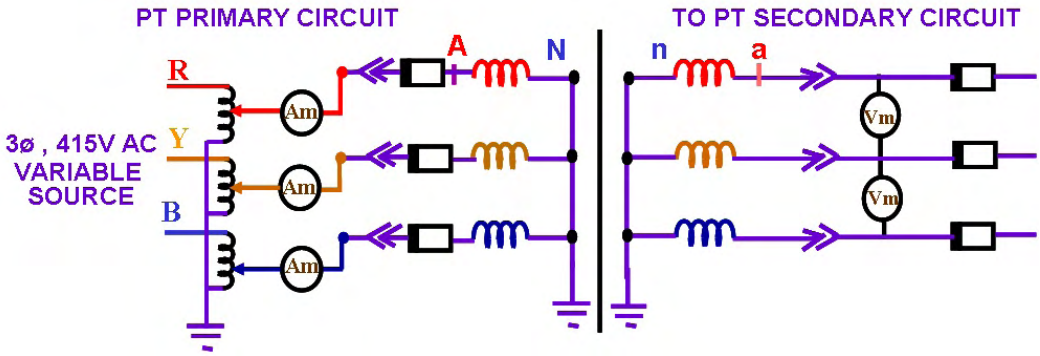

Fig 30A Ratio Check – Star Winding

Sometimes it is insisted to do ratio check at the rated voltage. To arrange three phase high voltage transformer is very difficult. For such cases, ratio check is done with single phase supply. High voltage low current set is used to derive high voltage from LT supply. (In CT primary injection test, low voltage high current set is used.) Assume ratio check is done on 11kV/√3/110/√3 PT. Following three methods are adopted for testing 3 phase PT. Refer Fig 30B, 30C and 30D.

(i) In Fig 30B, 11kV voltage is applied across RY and then across YB. Corresponding ry and yb voltages are measured respectively on the secondary side.

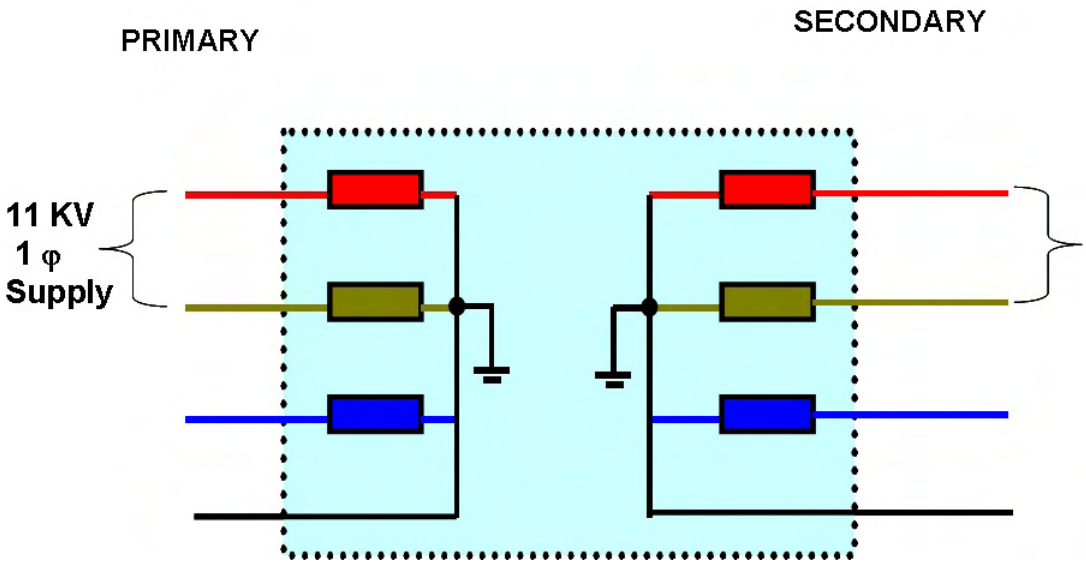

Fig 30B Ratio Check – Star Winding

(ii) In Fig 30C, 11kV/√3 is applied across R-N, Y-N and B-N. Corresponding r-n, y-n and b-n voltages are measured respectively on the secondary side.

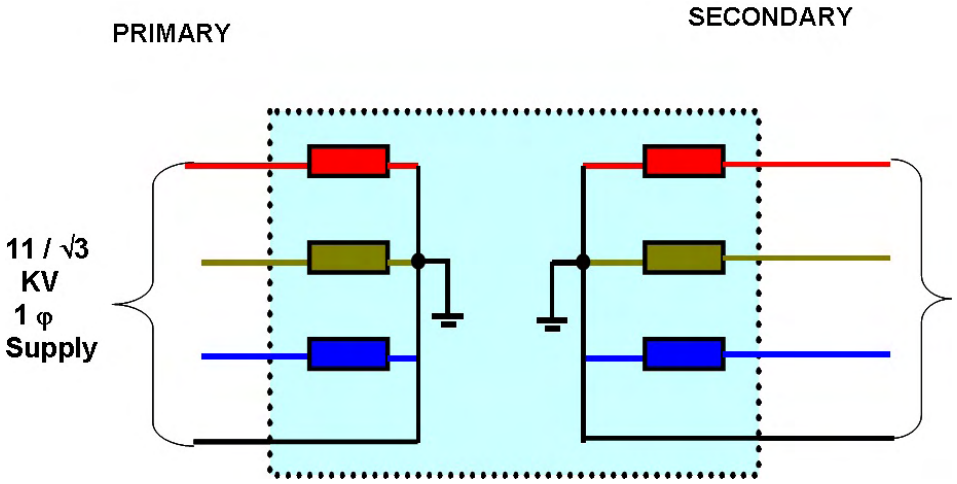

Fig 30C Ratio Check – Star Winding

(iii) In Fig 30D, all three phases are shorted on primary side and the three phases are shorted on secondary side. 11kV/√3 is applied on the primary side and the corresponding voltage is measured on the secondary side.

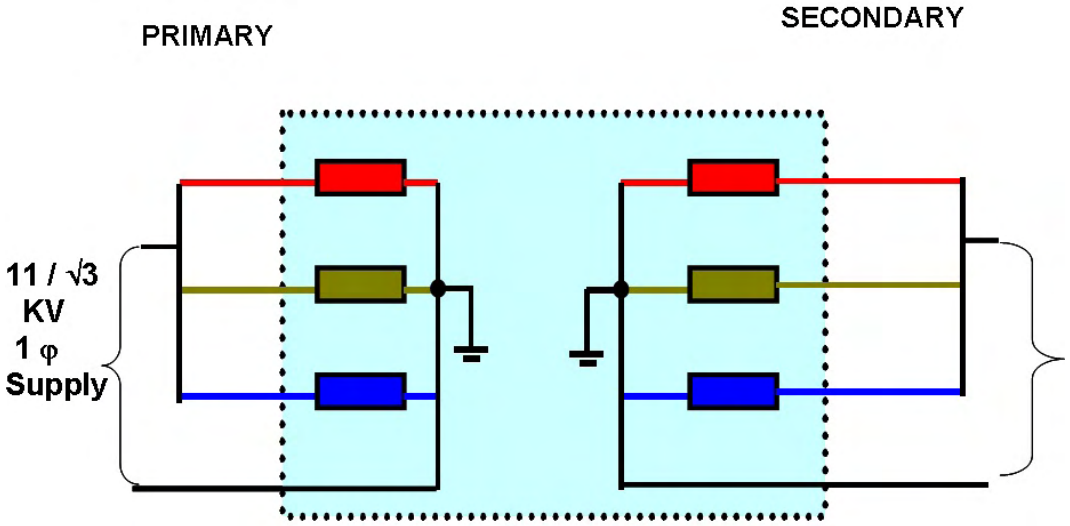

Fig 30D Ratio Check – Star Winding

Of the above, methods (i) and (ii) are the recommended methods. Method (3) is not recommended as it may lead to burning of winding due to flow of huge zero sequence current. The flux distribution is shown in Fig. 30E.

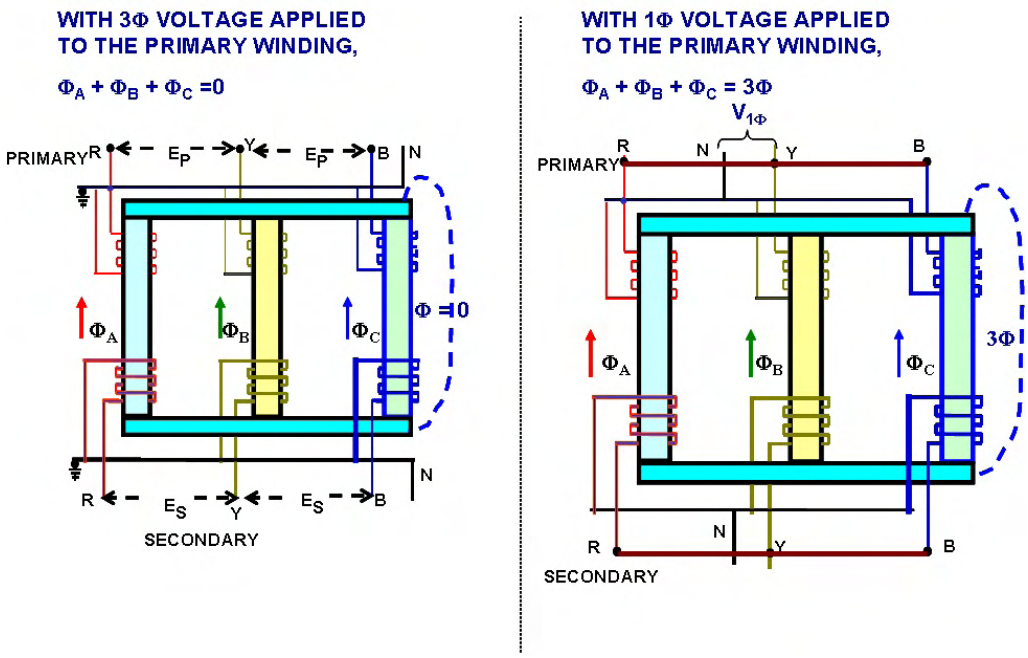

Fig 30E Flux Distribution

However if five (5) limb PT is used method (3) can also be used as the zero sequence can flow through the side limbs of five (5) limb PT. Refer Fig. 30F.

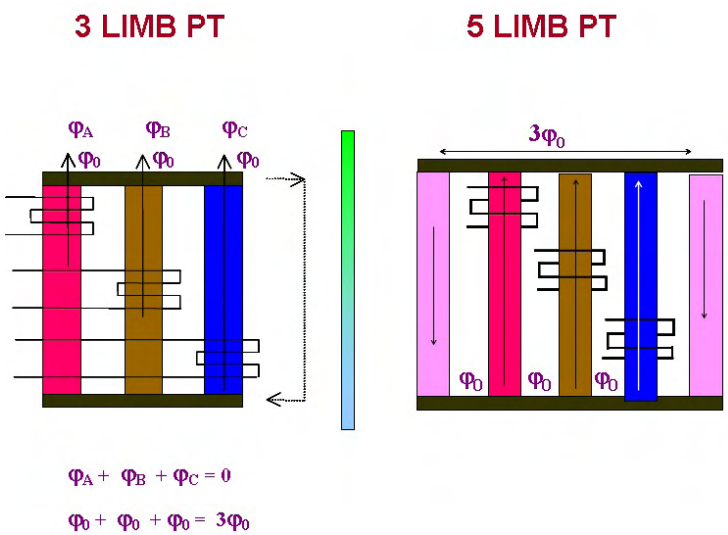

Fig 30F 3 Limb PT Vs. 5 Limb PT

It is emphasized that ratio check need not be carried out at rated voltage.

3.3.2 Ratio Check for open delta winding

Isolate PT primary from main bus and PT secondary circuit. Before starting the test, ensure primary earthing connections are firm. Refer Fig. 31A, 31B, 31C for the test setup Apply 3 phase, 415V gradually on PT primary side. Measure open delta voltage 'V'. It should be nearly zero. Remove fuse F1 on R phase and then short R phase primary winding (to simulate V_R= 0). Apply 3 phase, 415V gradually on PT primary side and then measure open delta voltage 'V' again. It shall be as per PT ratio of open delta winding.

Eg. PT ratio 12kV/√3/120/3, then open delta voltage will be 4.15V for applied voltage of 415V on primary side.

Repeat the test for 'Y' and 'B' phase by removing the respective fuse and shorting the corresponding winding.

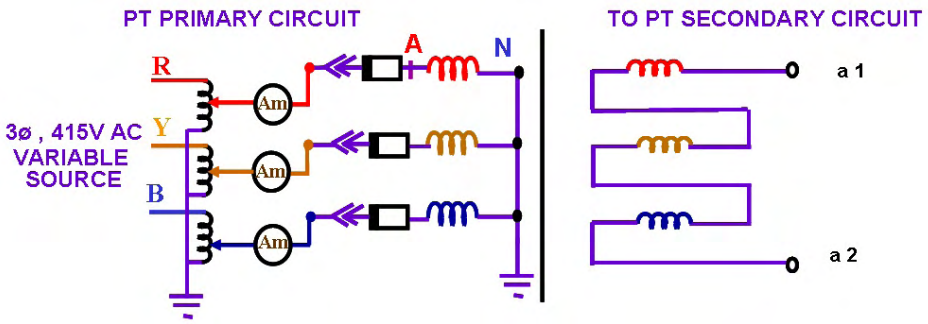

Fig 31A Ratio Check – Open Delta Winding

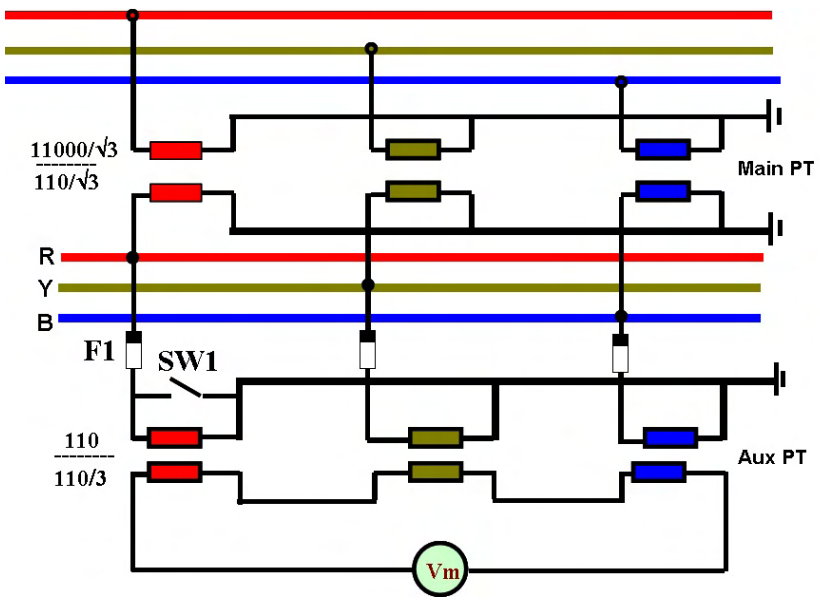

Fig 31B Ratio Check – Open Delta Winding

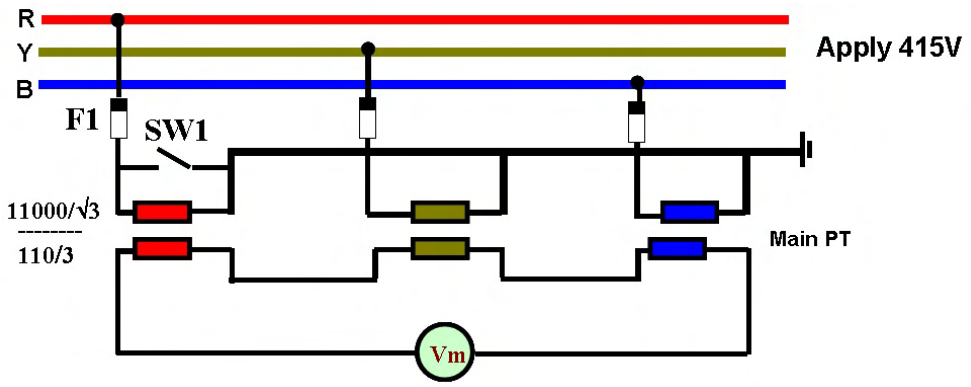

Fig 31C Ratio Check – Open Delta Winding

3.4 PT secondary injection check

This testing is done ensure correctness of secondary wiring. Connect the test setup as per Fig. 32.

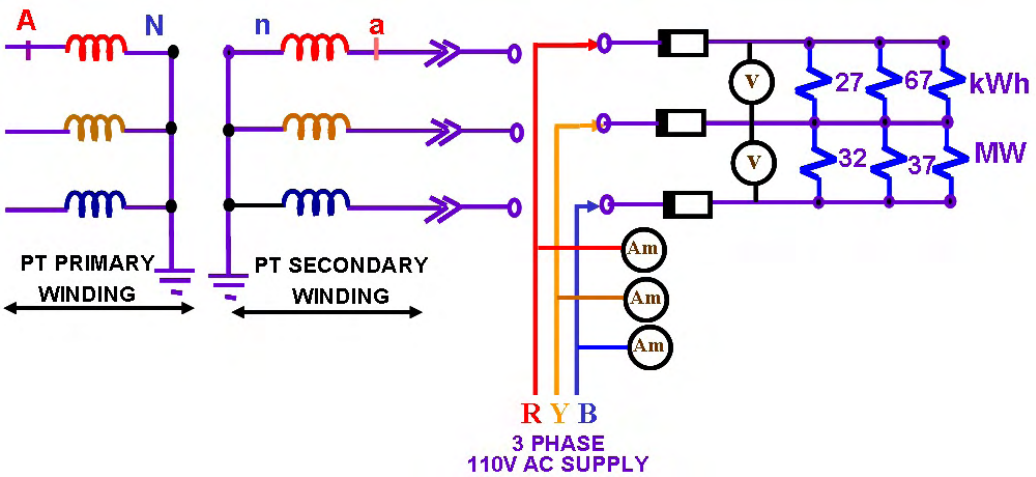

Fig 32 PT Secondary Injection

Isolate PT secondary winding at terminals from secondary circuit terminals to avoid PT primary winding getting live due to back charging. Apply voltage gradually from 0 to 110V. Monitor current of each phase while increasing the voltage. This shall be less than the specified ratings. At 110V, secondary current shall not be more than 100-150mA normally. If current increases rapidly check the secondary circuit for a short. At full voltage, check phase to phase voltage at relay/ meter terminals as per Schematic drawings. Check phase sequence at relay and meter terminals to confirm wiring. If the same PT supply is tapped to other panels then remove PT secondary

circuit fuses of those particular panels. Check the voltage and phase sequence upto fuse incoming. Carry out PT secondary injection for other panels from fuse outgoing to check each panel PT circuit.

3.5 PT combined primary and secondary injection check

Restore connection of PT secondary circuit to PT secondary terminals and secondary and primary winding earthing. Isolate PT primary from main bus. Arrange the test set up as per Fig. 33. Apply 3phase, 415V supply to PT primary. Measure corresponding secondary voltage at meters/relay terminals and across open delta winding. Voltage shall be zero across open delta when 3 phase, 415V is applied at primary winding.

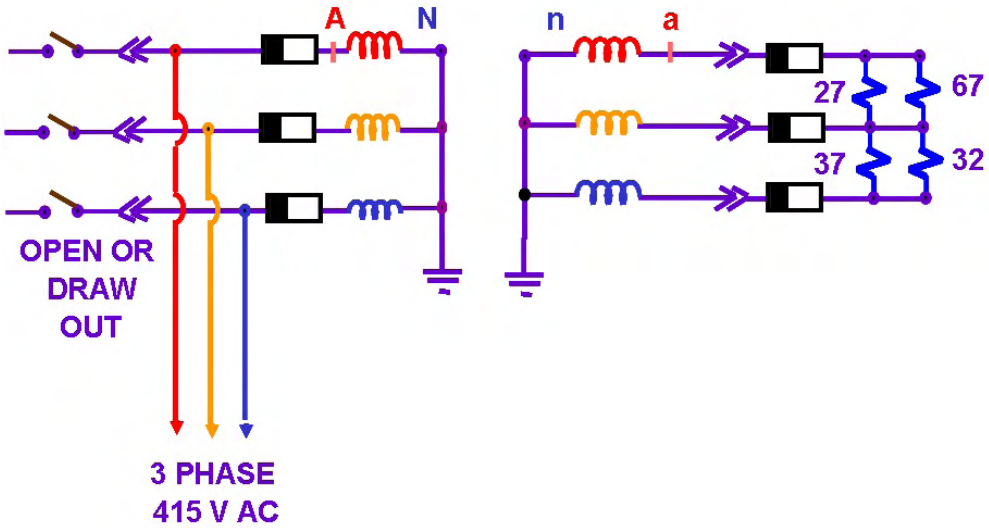

Fig 33 Combined Primary and Secondary Injection

3.6 General checks for Potential transformer

(i) Mechanical alignment for PT power jaws.

(ii) PT primary winding star earthing.

(iii) Free movement of PT trolley.

(iv) Tightness of all connections.

(v) Primary/ Secondary fuse ratings.

(vi) PT specifications.

4.0 Conclusion

Procedures for testing of instrument transformer and secondary wiring are presented. The field engineers are encouraged to use the material presented above for successfully commissioning the protection schemes at site.

Scrutineers' comments and Author's replies

1.0 Scrutineers' Comment

Technical errors in the content (e.g. Knee Point Voltage for "P" class cores; Insulation Resistance Values Guidelines (i.e. KV + 1); VT Megger measurements are same as CT).

Author's Reply

Since what is perceived to be correct and what is not correct are not spelt out, I can only guess and answer:

(a) Knee Point Voltage for "P" class cores: In the paper, under Excitation (saturation) characteristic check, in Cl (2), following is stated:
"For a protection class CT, ...The design value of KPV is given by..".
For more clarity, *'The design value of KPV'* will be replaced by *"The minimum design value of KPV'.*

(b) Insulation Resistance Values Guidelines (i.e. KV + 1): VT Megger measurements are same as CT.

This is the generally accepted value. Refer one of the most referred books 'Electrical power Equipment maintenance and testing' by Paul Gill, pp 77. It is stated: "Rule of thumb - Minimum acceptable value of insulation to place equipment in service is 1 Megaohms per rated Kilovolts plus 1 Megaohm."

2.0 Scrutineers' Comment

Tests related to maintenance during routine and breakdown maintenance are not addressed

Author's Reply

The tests described in paper are carried out as precommissioning tests before the switch board is commissioned. Some of these tests are also carried out in case of suspected malfunctioning of protective relays. In this article we are confining to only electrical tests. Non-electrical tests are not covered in the present paper.

To be precise, the third sentence under 'Introduction' will be changed from '*This article elaborates the tests...' to ' This article elaborates the electrical tests...'*

ieema journal

Reactive Compensation Fundamentals for Distribution Networks

Dr K Rajamani and Bodhlal Prasad,

Reliance Infrastructure Ltd., MUMBAI

(August 2009, IEEMA Journal, Page 112 to 115)

Reactive Compensation Fundamentals for Distribution Networks

Dr K Rajamani and Bodhlal Prasad, Reliance Infrastructure Ltd., Mumbai

1.0 Introduction

Reactive power is a mystic topic in electrical engineering. Active power can be transferred over hundreds of kilometers. However, reactive power can not be transferred even over a shorter distance without encountering voltage problems. In AC systems the voltages at various levels are maintained within a very narrow range, typically +/-10%. Inductive loads and reactive losses in transformers and feeders are major sinks for reactive power. Generators alone cannot meet the reactive power demand in the system, because they are primarily meant for supplying active power and transport of reactive power from generating station to load centres is not practical. Higher reactive losses, if uncompensated, tend to drag the voltage below stipulated limits. The efficacy of transformers taps in voltage control is limited because they draw more reactive power from upstream sources to improve the downstream voltage. The remedy is to provide reactive compensation using shunt compensation at all voltage levels.

Reactive compensation at transmission level was discussed in Ref [1]. The effect of changing the tap of Generator Transformer on reactive output from the unit was dealt with in Ref [2]. This article elaborates on reactive compensation aspects at distribution level.

2.0 Simulations

The system considered for simulation is shown in Fig 1. Power is drawn from 100 MVA, 220 kV / 33 kV transformer (T1). Five 33 kV outlets are considered each terminating on 20 MVA, 33kV / 11kV transformer (T2). Each 11 kV feeder feeds 5 No 1MVA, 11 kV / 415V Distribution Transformers (DT).

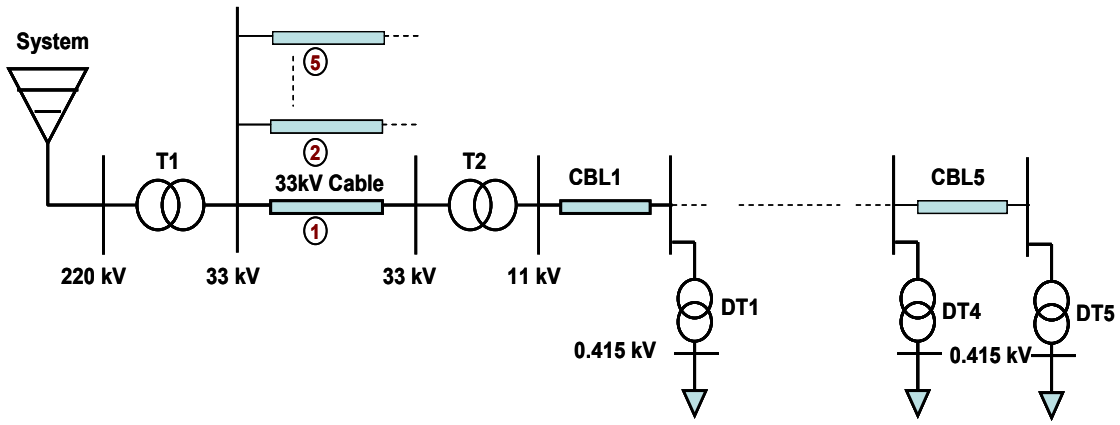

Fig 1 Electrical system for simulations

August 2009, IEEMA Journal, Page 112 to 115

3.0 Analysis of Results

The results of simulation are given in Table 1. 11kV and 415V values for the last Distribution Transformer (DT5) in the loop are shown to reflect the worst condition.

Base Case: No compensation is provided at any voltage level. Power factor at 415V (LT) bus is 0.85. LT bus voltage is 76.8%.

3.1 Case 1

350 KVAR compensation is added at each LT 415V bus. LT bus voltage is 81.5%. Even though LT power factor has improved from 0.85 to 0.95 voltage still remains well below 90%. This brings out an important fact that APFC (Automatic Power factor Control) at LT level by itself can not improve system voltage profile significantly unless upstream voltages (11kV and 33 kV) are also improved simultaneously.

3.2 Case 2

As a second step, let us add reactive compensation (capacitors) at 11 kV level. 2.5 MVAR compensation is added at each 11 kV bus. This improves not only 11 kV voltage (from 83.3% in Case 1 to 87.5% in Case 2) but also improves LT bus voltage (from 81.5% in Case 1 to 86% in Case 2).

3.3 Case 3

As a third step, let us add 20 MVAR reactive compensation at 33 kV bus. This improves not only 33 kV voltage (from 93% in Case 2 to 96.5% in Case 3) but also improves 11 kV bus voltage (from 87.5% in Case 2 to 91.6% in Case 3) and improves LT bus voltage (from 86% in Case 2 to 90.3 in Case 3).

The important conclusion from above is that reactive compensation shall be provided at *each voltage level* to improve system voltage profile.

3.4 Case 4

Same as Case 1 but the tap on 20MVA 33kV / 11 kV transformer is set at -7.2%. As expected, the 11 kV voltage has improved (from 83.3% in Case 1 to 92.1% in Case 4).

3.5 Case 5

Same as Case 1 but reactive compensation of 5 MVAR at each of 11 kV buses. All transformer taps are set nominal. In this case also, 11 kV voltage has improved (from 83.3% in Case 1 to 92% in Case 5). It is very interesting to compare this result with that of Case 4. In both cases 11 kV bus voltage has improved to nearly 92%. But in Case 4 (tap changing), this is obtained by drawing more MVAR from 33 kV side of transformer (13.5 MVAR in Case 4 compared to only 4 MVAR in Case 5). Because of lesser MVAR drawl, 33 kV bus voltage is also better (91.3% in

Case 4 compared to 95.5% in Case 5). The lesson is that tap changing per se improves voltage profile but at the expense of increased VAR drawl.

3.6 Case 6

Same as Case 5 but the tap on 20MVA transformer is set at -5.4%. In this case, 11 kV voltage has improved (from 92% in Case 5 to 99.5% in Case 6). But surprisingly in this case, MVAR drawl on 33 kV side of 20 MVA transformer has marginally decreased (4 MVAR in case 5 compared to 2.8 MVAR in Case 6). This appears contradictory to what is stated in the analysis of previous case. But a close scrutiny reveals the following fact: In Case 5, 11 kV bus voltage is 92% and 415V bus voltage is 90.7%. In this case, 11 kV bus voltage is 99.5% and 415V bus voltage is 98.6%. The capacitors present at *both* voltage levels (11kV and 415V) generate VARs proportional to square of voltage. This increased local VAR generation reduces requirement for importing VAR from 33 kV side.

3.7 Case 7

Same as Case 3 but the taps are adjusted as follows:

100MVA, 220 kV / 33 kV transformer: -2.5%

20MVA, 33 kV / 11 kV transformer: -3.6%

Though very near 100% voltages are obtained at all levels (33kV, 11kV and LT), the reactive drawl from source (220 kV) is the lowest among all cases simulated (10.3 MVAR). This is due to judicious use of capacitors *along* with tap changing.

4.0 Concept of compensation

Refer Fig 2.

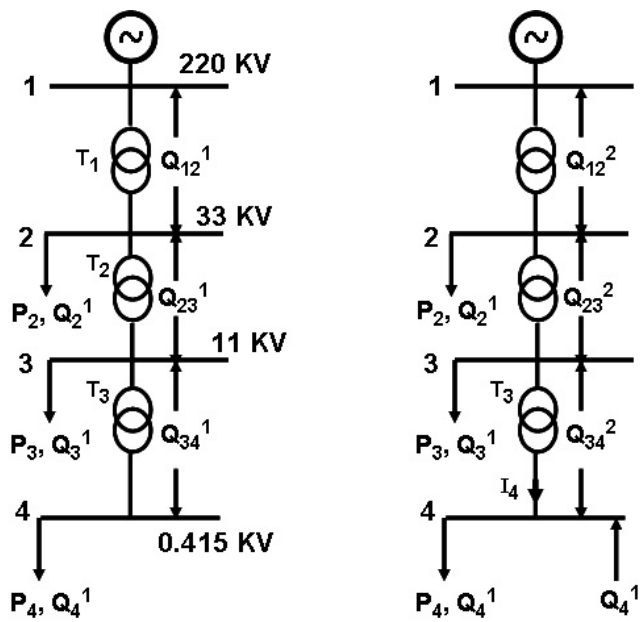

Fig 2A Fig 2B

Fig 2 Compensation Strategy

4.1 In Fig 2A, power drawl (without compensation) at different voltage levels are shown.

4.2 Fig 2B: Q_4^1 is fully compensated. Current drawn at bus 4 (I_4) is at UPF. Reactive flow Q_{34}^2 represents reactive loss ($I_4^2X_T$) across transformer T_3.

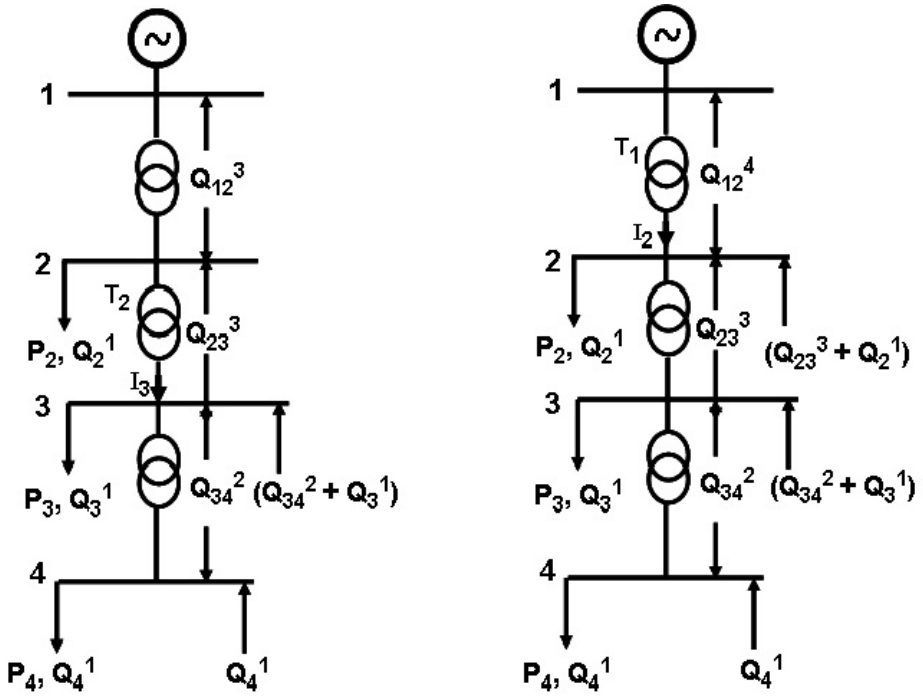

Fig 2C Fig 2D

Fig 2 Compensation Strategy

4.3 Fig 2C: At Bus 3, the load Q_3^1 is fully compensated. In addition, the reactive loss Q_{34}^2 is also compensated. Current drawn at bus 3 (I_3) is at UPF. Reactive flow Q_{23}^3 represents reactive loss ($I_3^2X_T$) across transformer T_2.

4.4 Fig 2D: At Bus 2, the load Q_2^1 is fully compensated. In addition, the reactive loss Q_{23}^3 is also compensated. Current drawn at bus 2 (I_2) is at UPF. Reactive flow Q_{12}^4 represents reactive loss ($I_2^2X_T$) across transformer T_1.

The reactive contribution from system is minimal corresponding to Q_{12}^4. The voltage profile of the whole system is good since large reactive flow across the network is avoided. The message from the above analysis is that the input current at all voltage levels shall be as close to UPF as possible.

5.0 Conclusion

Reactive compensation shall be provided at all voltage levels. Tap changing is not a substitute for robust reactive compensation. Judicious use of tap changing *with*

reactive compensation will result in satisfactory voltage profile with minimum transport of VAR in the network.

6.0 References

[1] 'Reactive compensation at transmission level' – K Rajamani, IEEMA Journal, Oct 1999, pp 26 - 30

[2] 'Effect of tap changing on reactive flow' – K Rajamani, H C Mehta, IEEMA Journal, June 2001, pp 40 - 44

Comments from Scrutineers' and Author's Replies

1.0 Scrutineers' Comment

Exact calculations giving the parameters on which these are based should be given in one case at least.

Author's Reply

The simulation is done using standard load flow software. No manual calculations were done. Major data used are as follows:

(i) Transformer T1: 220 / 33 KV, 100 MVA, 14.59%

(ii) Transformer T2: 33 / 11 KV, 20 MVA, 12%

(iii) Distribution Transformers (DTs): 11 / 0.415 KV, 990 KVA, 5%

(iv) 33 KV Al cable: 3Cx400 mm^2, 6KM, 0.1016 + j 0.1022 Ω/ KM

(v) 11 KV Al cable: 3Cx300 mm^2, each section – 0.6KM, 0.13 + j 0.087 Ω/ KM

(vi) Loading on each DT: 900 KVA @ 0.85 pf

2.0 Scrutineers' Comment

Optimising for a given load has at least three variables. The load itself, which in this case is treated as fixed parameter, could be the 4th parameter. Can the author touch the subject of an applicable algorithm to cover this aspect?

Author's Reply

Requirement of VAR compensation taking into account tap changing is worked out for peak load conditions. During non-peak load conditions, voltage / VAR control is effected through tap changing or switching in / off capacitors. We are not too convinced of the usefulness of optimisation algorithms when applied to large distribution networks.

TABLE-I EFFECT OF COMPENSATION AND TAP ADJUSTMENT

Case	Description	Reactive Compensation (MVAR)			Tap Information		Voltage in percentage (%)			Reactive Power Drawn By (MVAR)			Power factor of power drawn at			
		33 kV Bus	11 kV Bus	415 V Bus	100 MVA Trf	20 MVA Trf	33 kV side of 20 MVA Trf	11kV (990 kVA Trf-5)	415 V (990 kVA Trf-5)	100 MVA Trf @220kV	20 MVA Trf @33kV	990 kVA Trf-5 @11kV	220 kV Bus	33 kV Bus	11 kV Bus	415 V Bus-5
Base Case	**Steady state, no reactive compensation**	NIL	NIL	NIL	Nominal Tap	Nominal Tap	89.0	80.2	76.8	67.4	11.0	0.6	0.72	0.79	0.82	0.85
Case-1	**Reactive Compensation of 350 kVAR at each 415 V bus**	NIL	NIL	0.35	Nominal Tap	Nominal Tap	90.6	83.3	81.5	57.1	9.4	0.3	0.77	0.83	0.93	0.95
Case-2	**Case-1 + Reactive compensation of 2.5 MVAR at each 11 kV bus**	NIL	2.5	0.35	Nominal Tap	Nominal Tap	93.0	87.5	86.0	42.0	6.8	0.3	0.85	0.90	0.94	0.96
Case-3	**Case-2 + Reactive compensation of 20MVAR at 33 kV**	20	2.5	0.35	Nominal Tap	Nominal Tap	96.5	91.6	90.3	18.0	6.3	0.3	0.97	0.92	0.96	0.97
Case-4	**Same as Case-1, 20MVA trf tap at -7.2%**	NIL	NIL	0.35	Nominal Tap	-7.20%	91.3	92.1	90.9	52.5	13.5	0.8	0.79	0.85	0.96	0.97
Case-5	**Case-1 + Reactive compensation of 5 MVAR at each 11 kV bus**	NIL	5	0.35	Nominal Tap	Nominal Tap	95.5	92.0	90.7	25.9	4.0	0.3	0.94	0.97	0.96	0.97
Case-6	**Same as Case-5, 20MVA trf tap at -5.4%**	NIL	5	0.35	Nominal Tap	-5.40%	96.6	99.5	98.6	19.2	2.8	0.2	0.96	0.99	0.98	0.98
Case-7	**Case-3 + taps changed**	20	2.5	0.35	-2.50%	-3.60%	100.3	100.1	99.2	10.3	5.3	0.2	0.99	0.94	0.98	0.98

Note: In all cases 220 kV bus voltage is 100%

August 2009, IEEMA Journal, Page 112 to 115

ieema journal

Selection of Current Transformer Parameters for Optimum Design – User Perspective

Dr K Rajamani and Bina Mitra,

Reliance Infrastructure Ltd., MUMBAI

(January 2010, Second International Conference on Instrument Transformers, IEEMA, Mumbai, Page II-8 to II-13)

Selection of Current Transformer Parameters for Optimum Design – User Perspective

Dr K Rajamani and Bina Mitra, Reliance Infrastructure Ltd., Mumbai

1.0 Introduction

The reliable performance of current transformers (CT) is the key to the success of correct functioning of protection and metering system. The specification of current transformers should be realistic to meet the functional requirements for the given application. Over-specification results in costly and bulky design without much value addition. The ideas explored here will be helpful to practicing engineer to specify correct parameters of current transformer. This will result in procuring the most economical current transformer without sacrificing end use requirements.

2.0 Metering CT Specification

Metering CTs are specified by burden, accuracy class and Instrument Security Factor (ISF). This discussion focuses on the conflicting requirements of accuracy class and ISF for metering CT.

2.1 Accuracy class for metering CT

Accuracy Classes as defined in IEC 60044-1 are given in Table 1.

Table-1

I_{PRI} (%)	% Error				
	Cl 0.2S	Cl 0.2	Cl 0.5S	Cl 0.5	Cl 1.0
120	0.2	0.2	0.5	0.5	1.0
100	0.2	0.2	0.5	0.5	1.0
20	0.2	0.35	0.5	0.75	1.5
5	0.35	0.75	0.75	1.5	3.0
1	0.75	-	1.5	-	-

The extended class (0.2S and 0.5S) are defined for use when CTs carry very low current compared to CT rated current for sustained period of time.

In case of power plants, some authorities are mandating use of Cl 0.2S CTs for Generator, EHV switchyard, Unit transformer (UT) and Station transformer (ST) incomers, all auxiliary transformer incomers and HV motor feeders. We will critically examine whether extended class CTs for monitoring of auxiliary power consumption really benefit the end user.

In a power plant except for power / energy measurement at generator and EHV switchyard, other measurements are used for trending auxiliary power consumption. When measurements are done for trend monitoring, values of same parameter are

January 2010, Second International Conference on Instrument Transformers, IEEMA, Mumbai, Page II-8 to II-13

compared at different times to evaluate incremental changes. Absolute errors are of no significance as the hardware (CTs and meters) remains the same.

Accuracy of less than 1% is not required for measurements in motor feeders. This follows from discussions given below.

The HV motors (11 kV, 6.6 kV and 3.3 kV) in power plant application can be classified into three broad categories: small motors (less than 100A), medium (100 to 300 A) and large motors (very few in numbers) like Boiler Feed Pump (300 to 900 A). In case of medium and large motors, the average loading current is about 60 % of CT rating and in case of small motors it could be about 40% in extreme cases. Of course, 5% and 1% loading is nearly impossible as the no load current of motor is typically about 35%. Error magnitudes for normal and extended class accuracy are compared in Table -2.

It can be seen that the errors are in the range of milliamps. Even for the largest motor in a power plant the boiler feed pump (BFP) with current of 600A, the difference in current measurement will correspond to 0.45 A (600 x 0.075/100) for Class 0.2/0.2S CT.

Table -2

% Loading	Class 0.2/ 0.2S				Class 0.5/ 0.5S			
	% Error		% Diff. in Error	Diff. in current meas. in Amps	% Error		% Diff. in Error	Diff. in current meas. in Amps
	Cl 0.2S	Cl 0.2			Cl 0.5S	Cl 0.5		
60% loading of a large motor	0.2	0.275	0.075	0.075A for primary current of 100A	0.5	0.625	0.125	0.125A for primary current of 100A
40% loading of a small motor	0.2	0.313	0.113	0.045A for primary current of 40A	0.5	0.688	0.188	0.075A for primary current of 40A

Let ΔI be the difference in current measurement with say Cl 1 and Cl 0.2S accuracy class CTs. For small motors, the difference in current measurement would be less than 1A. Even for the largest motor like BFP, the difference is of the order of just 6A when drawing 600 A. Let ΔP be the change in process parameters like flow, pressure, temperature, etc for given ΔI . If ΔP is almost non-measurably small for a given ΔI, as in actual practice, there is no value addition in measuring the current with extraordinary precision. It is difficult to believe that the trend obtained with Cl 0.2S CTs can only reveal significant changes in process parameters that may not be revealed using Cl 1.0 CTs.

Only for tariff metering, e.g. export on transmission lines, we may consider Cl 0.2 S. Depending on network - load geometry, some of the outgoing lines may carry less than 20% of CT rated current. But even this is of doubtful utility as we are interested in total exported units over many lines. Export over those lines carrying very less current (1 to 20%), will have least impact on overall accuracy in total exported units. Hence Cl 0.2 accuracy class is adequate for all line CTs in switchyard.

In case of CT on generator terminal, the currents will be more than 60 to 70% of CT rated current for majority of the time. Current below 20% occurs only during unit start up or planned shut down period which is very short compared to normal running hours. Hence Cl 0.2 accuracy class is adequate for generator CTs also like line CTs.

Auxiliary consumption is calculated as the difference between total KWHr generation at machine terminal and total KWHr exported over connected transmission lines in specified period (day, month, year). Since both the quantities are calculated with Cl 0.2 CTs, adequate accuracy is obtained to monitor auxiliary consumption.

CTs of UT and ST incomers can be of Cl 1 accuracy as these are used for trending and monitoring transformer loading.

Accurate measurement per se does not necessarily result in process improvement. Using an atomic clock to measure the speed of passenger train gives only a false sense of accuracy without tangible benefits.

In brief, for power plant applications, Cl 0.2 CTs is suggested for generator and export lines. All other CTs can be Cl 1.0. Extra high precision metering shall be eschewed unless it can lead to demonstratable process improvement.

2.2 Accuracy class and Instrument Security Factor for metering CT

The main difference between protection CT and metering CT is the saturation characteristics. The protection CT will *not* saturate up to a specified current, say 20 I_{RAT}. On the other hand, the metering CT *will* saturate within specified current, say 10 I_{RAT}. The later is termed as ISF for metering CT. This is basically to ensure that the metering CT saturates during faults and its output reduces so that the connected measuring equipment is safe.

Every system designer wishes to use very high accuracy class (Cl 0.1, Cl 0.2, Cl 0.2S, etc) and low ISF (<= 10) current transformer. But these two are contradictory requirements and can't be satisfied simultaneously. High accuracy class demands very low excitation current, low flux density and hence higher core cross section. If the core size is big, it can't be saturated at low current. The situation is accentuated in case of CTs with low rated current. A typical CT specification could be 50 / 1, Cl 0.2S and ISF <

January 2010, Second International Conference on Instrument Transformers, IEEMA, Mumbai, Page II-8 to II-13

10. It is not practical to manufacture a CT for this specification as the CT should maintain required high accuracy from 0.5A to 60A. This can only be achieved by a higher core size. Having selected the higher core size, it can't be saturated at a current of only 500 A (10X5). The ISF practically achievable could be even 50 or more.

ISF should not be looked in isolation and has to be judged vis a vis the over current capability of connected equipment. The over current capability of some of the commonly used transducers / meters is given below:

Energy meters	20 x I_{RATED} for 1 sec
Transducers	40 x I_{RATED} for 1 sec
Ammeters	10 x I_{RATED} for 5 sec

Let us consider the following example:

Application: Outgoing motor feeder

Three phase fault current = 30 kA

Single phase fault current = 300 A (Limited by NGR)

Fault clearance time: 0.15 sec

CT Ratio = 75 / 1

Connected meter capability = 20 x I_{RATED} for 1 sec

= 1.5 kA for 1 sec

All phase and earth faults on a motor feeder are cleared within 0.15 sec. Allowable current for 0.15 sec through the meter can be calculated based on I^2t formula.

$I^2 \times 0.15 = 1.5^2 \times 1$

$\therefore\ I = 3.87$ kA.

The above signifies that the meter can withstand 3.87kA for 0.15secs on primary. Required ISF to prevent meter damage = 3.87 / 0.075 = 52

Hence ISF <= 50 is acceptable. It implies that beyond 3.75 kA (50 x 75), the CT will saturate and limit the current fed to the meter during faults.

It may be noted that 70% of faults in power system are earth faults. In this case, the earth fault current is limited to 300 A. The reflected fault current of 4 A (300 / 75) is well below the meter over load capability. Hence, in majority of cases, ISF does not have much practical relevance.

January 2010, Second International Conference on Instrument Transformers, IEEMA, Mumbai, Page II-8 to II-13

3.0 CTs for Unit Protection

3.1 CT sizing for differential protection of transformer

Biased differential protection scheme is provided for a transformer. A typical biased scheme which operates by sensing the difference of currents on two sides of the protected object at different voltage level is shown in Fig. 1.

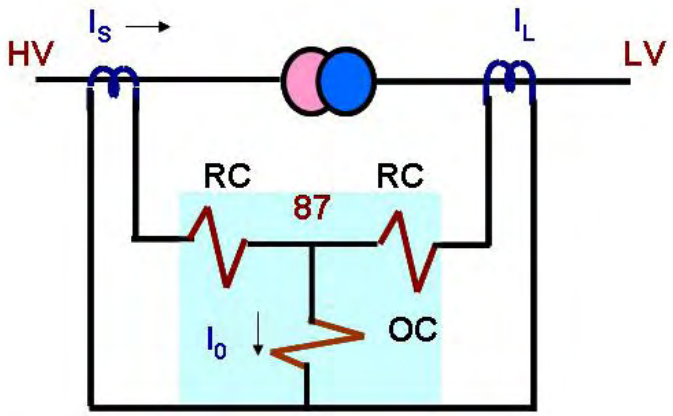

Fig 1 Conventional Biased differential scheme

Knee Point Voltage (KPV) of CTs used in biased differential protection scheme of transformer is calculated based on the formula:

$KPV = 2\ I_F\ (R_{CT} + 2\ R_L)$

Following guidelines are used for choosing appropriate value of fault current I_F for calculating KPV

(i) CT on LT side of transformer - LT system fault current or 20 times rated current of LT CT, whichever is *lower*.

(ii) CT on HT side of transformer - HT system fault current or 20 times rated current of HT CT, whichever is *lower*.

The rational for the above is based on characteristics of biased differential scheme. In a conventional biased differential protection relay, there is operating coil (OC) and a restraining coil (RC).

The tripping characteristic of the scheme is defined by the biasing curve. The biasing curve plotted for operating current versus restraining current, determines the operating zone for the relay. The bias curves are provided to take care of mismatch in CT magnetizing curves, OLTC operation etc. and thereby ensuring stability of differential protection during through faults. Refer Fig 2 for a biasing curve for a typical numerical relay.

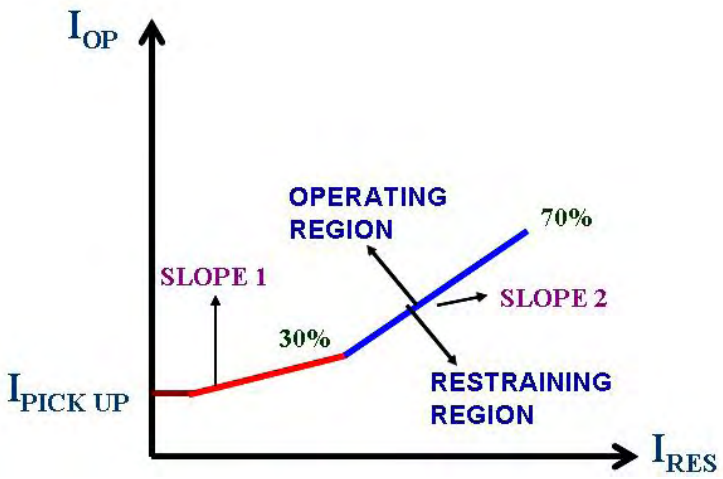

Fig 2 Biasing Curve

The current through restraining coil (RC),

$$I_R = \frac{(I_S + I_L)}{2}$$

The current through operating coil (OC),

$$I_O = I_S - I_L$$

The minimum operating current required for differential protection operation is

= K x I_R, where K is the slope of the biasing curve.

e.g. if K is set to 30% then the minimum operating current = 0.3 x I_R

In addition to biased differential element, there is an 'unrestrained' element provided in differential protection scheme. This is provided to clear internal faults of high magnitude, usually the faults on the HV side of transformer. Normally a setting of $10I_N$ is adopted for this feature. The above concept is explained with an example. Consider a transformer with rating of 132/33kV, 100 MVA, and Z = 10%. Refer Fig. 3

$$\textit{Through fault MVA} = \frac{100}{0.1}$$

$$= 1000 \text{ MVA}$$

$$\textit{Fault current on 33kV side} = \frac{1000}{(\sqrt{3} x 33)}$$

$$= 17.5 \text{ kA}$$

Reflected fault current on 132kV side = 4.37kA

$$\textit{Therefore, } I_S = \frac{4370}{500}$$

$$= 8.75;$$

$$I_L = \frac{17500}{2000}$$

$$= 8.75\ A$$

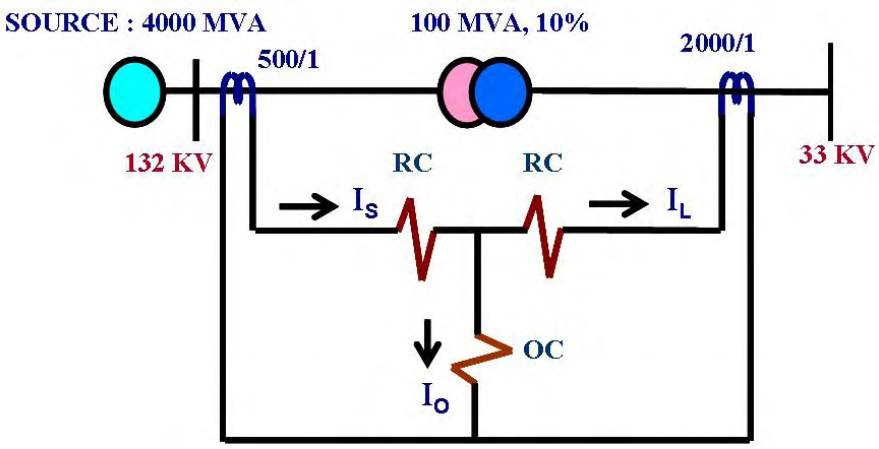

Fig 3

Case -1: External Fault on 33kV side, Fault F1 (Refer Fig. 4)

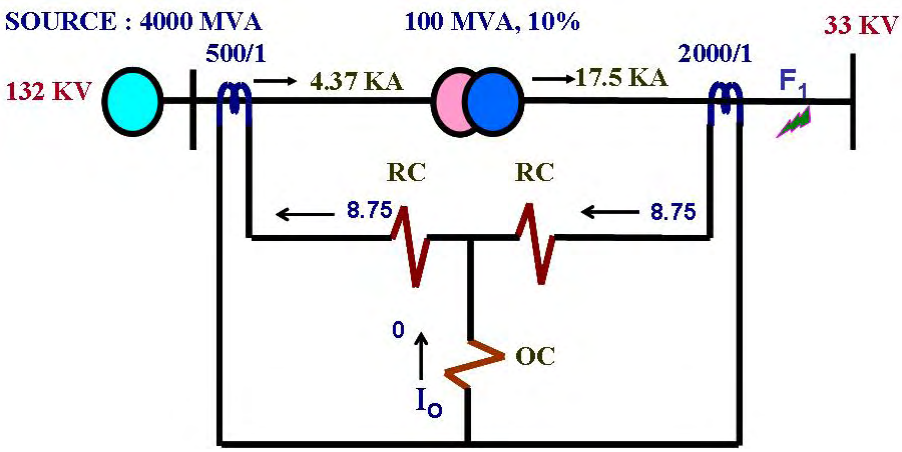

Fig 4 External Fault on 33kV side

As seen from Fig.4, for an external fault, the restraining current is 8.75 and the operating current is zero (0).

$$I_R = \frac{(I_S + I_L)}{2}$$

$$= \frac{(8.75 + 8.75)}{2}$$

$$= 8.75\ A$$

The current through operating coil,

$$I_O = I_S - I_L = 0$$

For 30% bias, the minimum current required for operation is 8.75 x 0.3 = 2.625, which is much higher than the theoretical value of zero (0). Thus adequate safety margin in the operating current is inherently ensured for through fault stability during external faults.

Case-2: Internal fault on 33kV side, Fault F2 (Refer Fig. 5)

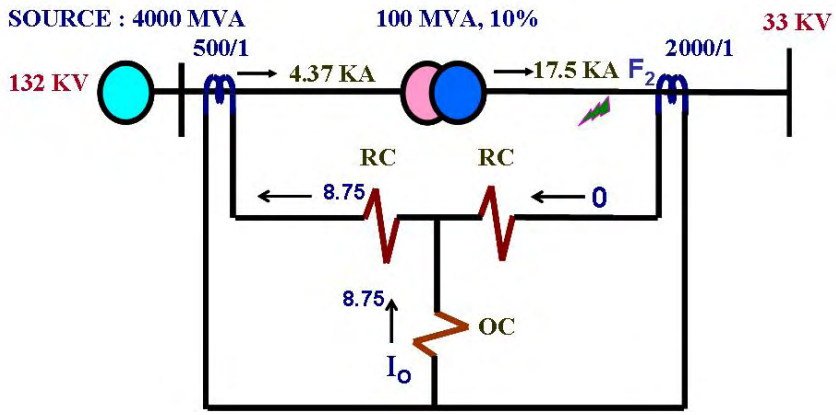

Fig 5 Internal Fault on 33kV side

During internal fault conditions, CT on 33kV side presents an open circuit (assuming no fault infeed from 33kV side) (Refer Fig. 6 for equivalent circuit).

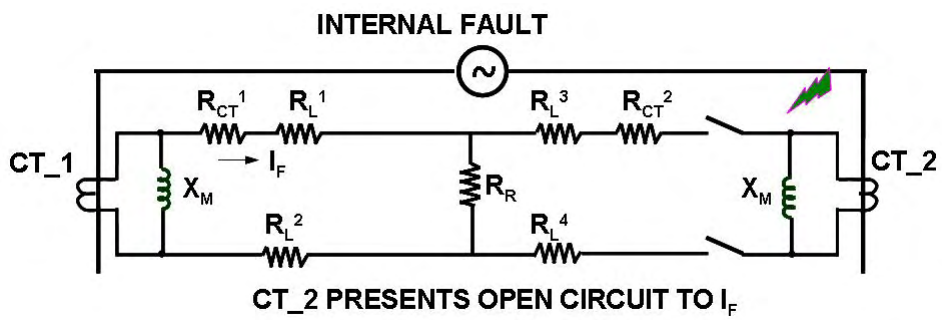

Fig 6

The restraining current is 4.375. The operating current is 8.75.

$$I_R = \frac{(I_S + I_L)}{2}$$

$$= \frac{(8.75 + 0)}{2}$$

$$= 4.375\ A$$

The current through operating coil, $I_O = I_S - I_L$

$= 8.75$ *i.e. 200 % of* I_R

The minimum operating current for 30% bias = 0.3 x 4.375

= 1.312

The current through operating coil (8.75) is much higher than the required minimum operating current (1.312). The relay will definitely operate for internal fault.

Refer Fig.7, the operating line lies in the operating region of the relay.

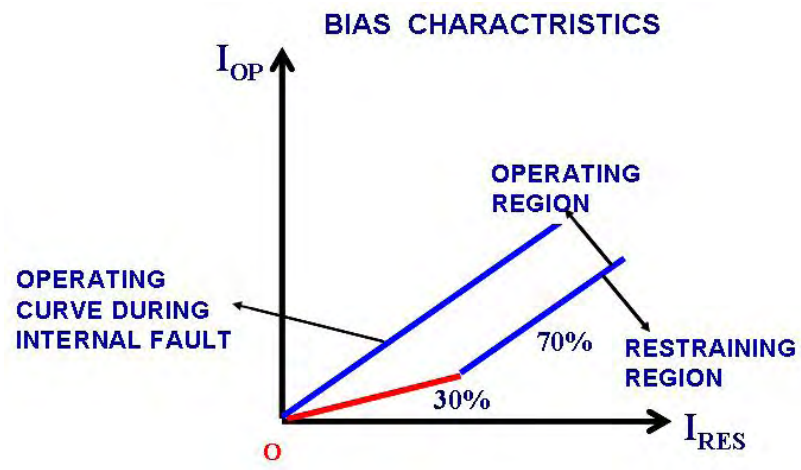

Fig 7 Relay Operating Curve

It may be noted that, when fault is fed from both the sides of transformer, the operating current is still higher. Current through operating coil, in case fault fed from both sides, $I_O = I_S - (-I_L) = I_S + I_L$. The operation for internal fault is absolutely certain.

Case-3: Internal Fault on 132 KV side. Fault F3 (Refer Fig.8)

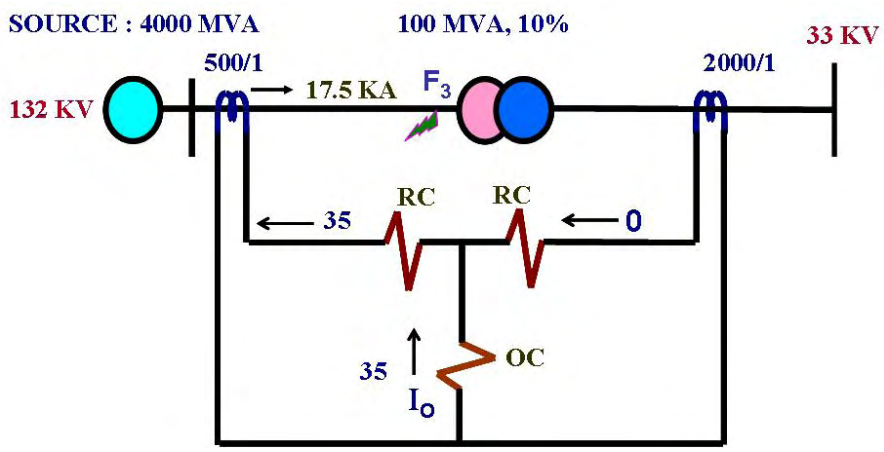

Fig 8 Internal Fault on 132kV side

The relay will operate for an internal fault as explained in Case-2.

The biased differential scheme explained above has drastically reduced the CT requirements. For a transformer differential protection, the CTs have to be stable (not to saturate) in case of through fault. Therefore it would suffice if the knee point voltage (KPV) is calculated based on through fault.

In case of internal fault on HV side, only CTs on HV side carry large current. There is no current in the LV side. Therefore the HV side CT current is 'forced' through the relay branch. Error due to partial saturation does not matter as the available CT output will be much higher than the 'set' current. Here the 'set' current refers to both the 'biased' as well as 'unrestrained' value. Assume the source fault current is $35I_N$.Typical unrestrained differential element setting is $10I_N$. Hence even if $25I_N$ is consumed in saturation, the relay will operate. Typical setting of operating current of restrained differential is 0.2 to 0.3 I_N. Hence out of $35I_N$, even if $34I_N$ is consumed in saturation, the relay will still operate.

The message of the above analysis is that KPV is relevant for external faults to ensure through fault stability. Non-operation of biased differential protection for internal faults due to CT saturation has *never been an issue*. The criteria for CT sizing stated earlier can be used ensuring stability for through faults and positive operation for in-zone faults.

3.2 CT sizing for differential protection of motor feeders

In power plant applications, HT motors rated 2 MW and above are usually provided with differential protection. The basis for CT specification, in most cases for motor differential protection, has been identical to what has been considered for transformer or generator differential protection. This is conceptually not correct. The fundamental differences in three cases are as follows:

In case of transformer, connected network is on both sides and source can be on one side or both sides of protected object (Fig 9). The CTs have to be designed to ensure stability for through faults at F_1 and/or F_2.

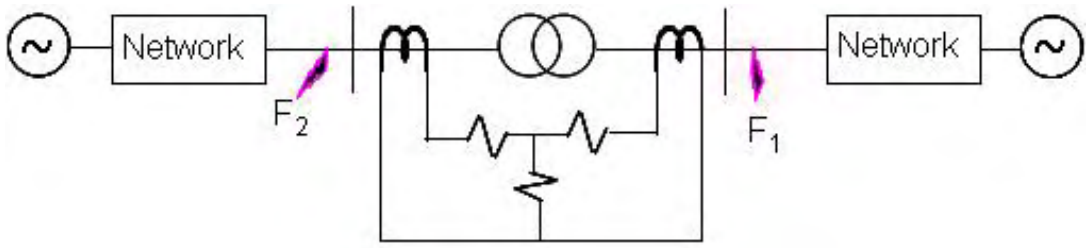

Fig 9

In case of generator, connected network and source are on one side of protected object (Fig 10). The CTs have to be designed to ensure stability for through fault at F_1.

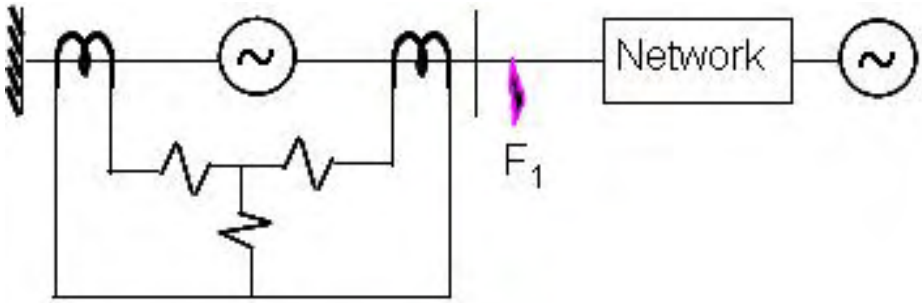

Fig10

In case of motor, the subtle difference is that it is at the tail end of the electrical network (Fig 11). Hence, not only differential but every other protection provided for motor is unit protection as they respond only to faults in motor. The differential protection zone is from switchgear to neutral of motor. The concept of through fault stability does not exist in this case. In case of fault at F_1, only the source side breaker B1 will trip. The differential protection responds to only internal fault F_2.

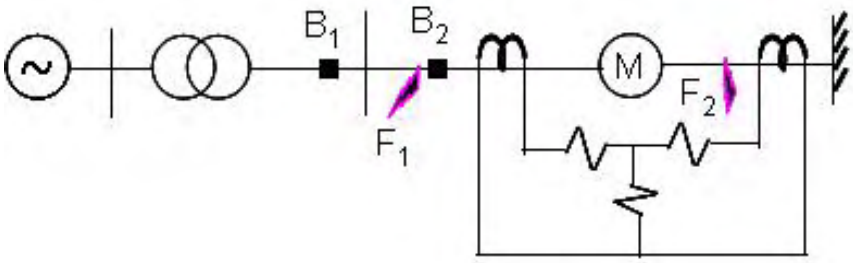

Fig 11

The condition which may threaten the stability of the motor differential is motor starting. It may be emphasized that even during starting, the same current flows in both in phase side and neutral side CTs unlike during transformer charging when current flows only on one side. To prevent nuisance pickup during starting, I_F can be considered greater than starting current which is about 600 to 700% of motor rated current.

In case of transformer or generator differential,

Knee Point Voltage of the CTs =

$2\ I_F\ (R_{CT} + 2\ R_L)$.

But in case of motor differential, where through fault stability is not a criterion,

Knee Point Voltage, KPV = $I_F\ (R_{CT} + 2\ R_L)$.

In this case, general protection class CT (say 5P20) can be used. Special protection class, Class PS CT is not mandatory for motor differential application.

Sample calculation is given below:

Motor Feeder with 300 / 1A CT; $R_{CT} = 2\ \Omega$; $2R_L = 10\ \Omega$

Full load current (FLC) = 250A

Maximum starting current, $I_S = 6 \times FLC$

$= 1500\ A$

$$\text{Minimum KPV} = \frac{I_S\left(R_{CT} + 2R_L\right)}{CTR}$$

$$= \frac{1500\left(2+10\right)}{300}$$

$$= 60\ V$$

Selected KPV = 100 Volts

4.0 Selection of Primary Rated Current of CT

Multiple primary ratio CTs are liberally specified. For example, typical CT ratio for 400 kV system is 500 – 1000 – 2000 / 1. Let us try to explore the utility of multiple ratios. At the outset consider metering core. The corresponding MVA at different loading conditions are given in Table-4

Table-4

% Loading	MVA			
	500A	1000A	2000A	750 A
120	415	830	1660	624
100	346	692	1384	520
5	17	35	69	25
1	4	7	14	5

The special feature of extended accuracy class is that defined accuracy is maintained even up to 1% of rated current (e.g. 0.75% for Cl 0.2S). However even for a short 20 KM *unloaded* 400 kV line, the charging MVAR itself will be 20. The practical usefulness of extended accuracy class of EHV line metering is questionable. For majority of the lines Cl 0.2 or Cl 0.5 will be adequate.

The maximum loading for a 400 kV line is limited to less than 500 MVA. Hence the utility of primary ratio of 2000 A is almost nil. The option available for primary ratio can be pruned to 500 – 1000 / 1. Even a single ratio of 750 / 1 (last column) with Cl 0.2 or Cl 0.5 accuracy will suffice.

In case of bus bar protection core, primary current rating is not related to load current. Higher primary current rating is preferred as it results in reduced knee point voltage requirement. Hence a single ratio of 2000 / 1 can be used for all feeders.

January 2010, Second International Conference on Instrument Transformers, IEEMA, Mumbai, Page II-8 to II-13

For other protection cores, the need for providing *more than* two primary ratios shall be critically examined in the light of wide setting ranges available in modern numerical relays.

5.0 Conclusions

The main tenet of this article is that the specification of CT and end use requirement must be compatible. For metering core, high accuracy per se under very low loading conditions is not required in majority of cases. Balance between high accuracy and low ISF is needed. In case of protection core for differential protection of transformer, design criteria for specifying KPV has been explained. This leads to more compact design, at the same time ensuring through fault stability. Basic conceptual difference between differential protection of motor and other equipment and consequent implication on CT requirement is brought out. The article ends with a plea for restricting multiple primary CT ratios to two.

January 2010, Second International Conference on Instrument Transformers, IEEMA, Mumbai, Page II-8 to II-13

ieema journal

Vector Group Testing of Transformer at site

Dr K Rajamani,

Reliance Infrastructure Ltd., MUMBAI

(August 2010, IEEMA Journal, Page 92 to 96)

ieema journal

Vector Group Testing of Transformer at site

Dr K Rajamani, Reliance Infrastructure Ltd., Mumbai

1.0 Introduction

Vector group testing of transformers is one of the commissioning checks in power plant / distribution projects. In literature, generally inequality / equality relationships for voltages are given to be satisfied for each vector group but the absolute values are rarely mentioned. In this article, the theoretical values for voltages across specified terminals for each vector group are derived. The following vector groups (most prevalent) are discussed: Dyn1, Dyn11, YNd1, YNd11, Dzn10, YNzn11, YNyn0.

2.0 Test Procedure

High voltage terminal are represented by R, Y, B and N (if applicable)

Low voltage terminal are represented by r, y, b and n (if applicable).

In case U, V, W convention is used, the corresponding values are given by following Table:

R	Y	B	r	y	b
1U	1V	1W	2U	2V	2W

For testing, R and r are shorted for all vector groups except YNzn11 where both neutrals are shorted.

Apply maximum LV voltage available from temporary power supply on HV side of transformer. Voltage in the range of 430V to 450V is desirable. Higher the voltage, higher is the accuracy of measurements. The voltages shall generally be balanced. At site, it is difficult to get perfectly balanced three phase voltages. For calculation purposes, the average of three phase or line voltages as measured shall be used. It is very important that the phase sequence of applied voltage is confirmed to be *positive sequence* using phase sequence meter. This is very crucial. For measurement, high accuracy digital voltmeter shall be used

2.1 Dyn1

The phasor diagram for test connection is shown in Fig 1.

August 2010, IEEMA Journal, Page 92 to 96

.

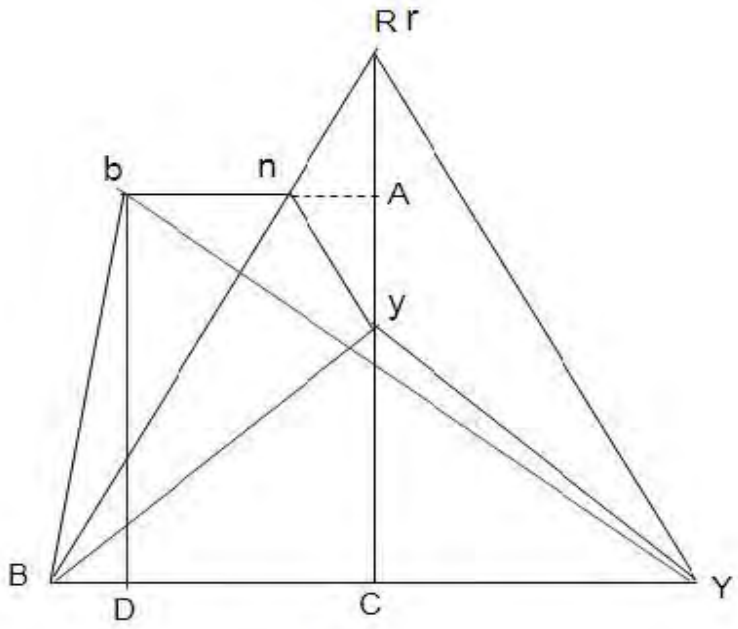

Fig 1

Delta Line Voltages: RY = YB = BR = S

Star Phase Voltages: rn = yn = bn = T

Using trigonometric principles,

Δrny is isosceles.

$\angle nrA = \angle nyA = 30^\circ$

$\angle nrY = 60^\circ$

Locus of y is on ⊥ bisector RC.

$$RC = \frac{\sqrt{3}}{2} S; \quad BC = \frac{S}{2};$$

$$Ry = \sqrt{3}\, T$$

$$yC = RC - Ry$$

$$= \left(\frac{\sqrt{3}}{2}\right) x\, S - \sqrt{3}\, T$$

$$By = \sqrt{BC^2 + yC^2}$$

$$= \sqrt{(S^2 + 3T^2 - 3ST)} \qquad \text{.....(1)}$$

$$Yy = By \qquad \text{.....(2)}$$

$yA = RA = \frac{\sqrt{3}}{2}\ T;\ \ An = \frac{T}{2}$

$bD = AC$

$= RC - RA$

$= \left(\frac{\sqrt{3}}{2}\right) x\ (S - T)$

$CD = An + nB$

$= \left(\frac{T}{2}\right) + T$

$= \left(\frac{3}{2}\right) T$

$BD = BC - CD$

$= \left(\frac{S}{2}\right) - \left(\frac{3}{2}\right) T$

$Bb = \sqrt{BD^2 + bD^2}$

$= \sqrt{(S^2 + 3T^2 - 3ST)}$ **……..…(3)**

$YD = YC + CD$

$= \left(\frac{S}{2}\right) + \left(\frac{3}{2}\right) T$

$Yb = \sqrt{YD^2 + bD^2}$

$= \sqrt{(S^2 + 3T^2)}$ **……..…(4)**

Summarizing, for DYn1

From Eqn (1) to (3)

$Bb = Yy = By$

$= \sqrt{(S^2 + 3T^2 - 3ST)}$ **……..…(5)**

$Yb = \sqrt{(S^2 + 3T^2)}$ **……(6)**

$Yy < Yb$ **……(7)**

$Rn + Bn = RB$ **……(8)**

2.1.1 Site Test Results

Voltage ratio: 20 kV / 11.5 kV

The site test results are given below:

RY = 417; YB = 416; BR = 418

Rr = 0; Rn = 139; Bn = 280

Bb = 242; By = 242

Yb = 479; Yy = 241;

2.1.2 Analytical values

Applied voltage S ≈ 417 Volts

$$T = \left(\frac{\left(11.5 / \sqrt{3} \right)}{20} \right) x\ 417$$

$$= 138.4\ V$$

From Eqns (5) to (8),

$$Bb = Yy = By$$

$$= \sqrt{(S^2 + 3T^2 - 3ST)}$$

$$= 241.3\ V$$

$$Yb = \sqrt{(S^2 + 3T^2)}$$

$$= 481\ V$$

$$Yy < Yb$$

$$Rn + Bn = 419 \approx BR$$

The above closely matches with test results.

The vector group of transformer is confirmed as Dyn1.

2.2 Dyn11

The phasor diagram is shown in Fig 2.

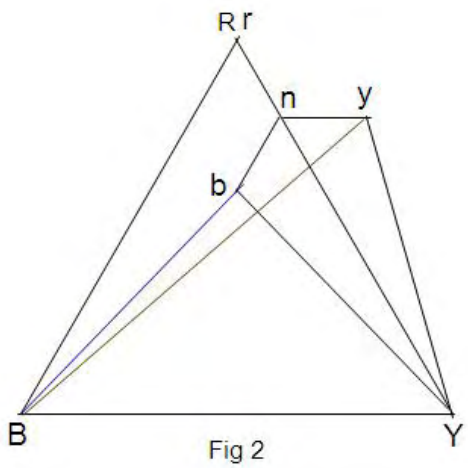

Fig 2

Delta Line Voltages: RY = YB = BR = S

Star Phase Voltages: rn = yn = bn = T

Using trigonometry relations, following relationships are obtained:

Bb = Yy = Yb

$$= \sqrt{(S^2 + 3T^2 - 3ST)} \qquad \text{.....(9)}$$

$$By = \sqrt{(S^2 + 3T^2)} \qquad \text{.....(10)}$$

$$Bb < By \qquad \text{.....(11)}$$

$$Rn + Yn = RY \qquad \text{.....(12)}$$

2.2.1 Site Test Results

Voltage ratio: 11 kV / 0.433 kV

The site test results are given below:

RY = 434; YB = 435; BR = 434

Rr = 0; Rn = 10; Yn = 425

Yb = 421; Yy = 420

Bb = 419; By = 434

2.2.2 Analytical values

Applied voltage S ≈ 434 Volts

$$T = \left(\frac{\left(0.433 / \sqrt{3} \right)}{11} \right) x\ 434$$

$$= 9.86\ V$$

From Eqns (9) to (12),

Bb = Yy = Yb

$$= \sqrt{(S^2 + 3T^2 - 3ST)}$$

$$= 419.3\ V$$

$$By = \sqrt{(S^2 + 3T^2)}$$

$$= 434.2\ V$$

Bb < By

Rn + Yn = 435 ≈ RY

The vector group of transformer is confirmed as Dyn11

2.3 YNd1

Vector group testing is more significant in case of large Generator Transformers (GT). In case of unit sizes 500 MW and above, the GTs are invariably three single phase banks due to transportation limitations. The vector group of GT could be either YNd1 or YNd11. The vector group of Station Transformer (ST) is universally YNyn0. The vector group of Unit Auxiliary Transformer (UAT) is constrained by the chosen vector group of GT so that UAT and ST can be paralleled on low voltage side. Delta connection of GT is formed by external bus ducts of very high current ratings (more than 10,000 Amps). Delta can be formed in two ways as shown in Fig 3. Depending on the connection, the vector group can be either YNd1 or YNd11. To reaffirm the vector group before final bus duct connections are made, it is desirable to perform the vector group identification test at site.

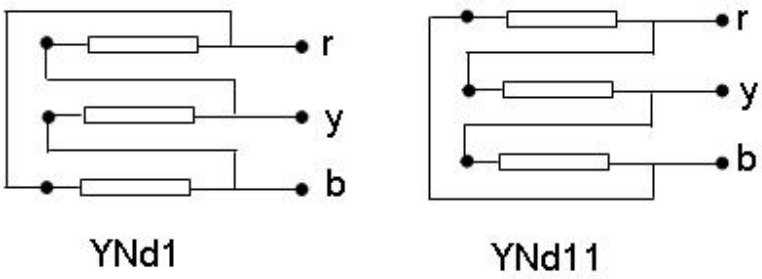

Fig 3

2.3.1 Test Procedure

(i) All the three single phase transformers are in place.

(ii) Form delta by, say, 3C x 2.5 mm^2 copper cable. All the three cores are bunched together to give an equivalent area of 7.5 mm^2.

(iii) Terminals R and r are shorted.

(iv) Apply maximum LV voltage available from temporary power supply on HV side of transformer. Confirm applied voltage is positive sequence.

(v) Measure respective voltages and verify with theoretical results. Check for the equality and inequality relationships to reaffirm the vector group

vi) For measurement, high accuracy digital voltmeter shall be used. The copper cables shall be used to connect transformer terminals to voltmeter to minimize the burden and improve accuracy of reading.

The phasor diagram is shown in Fig 4.

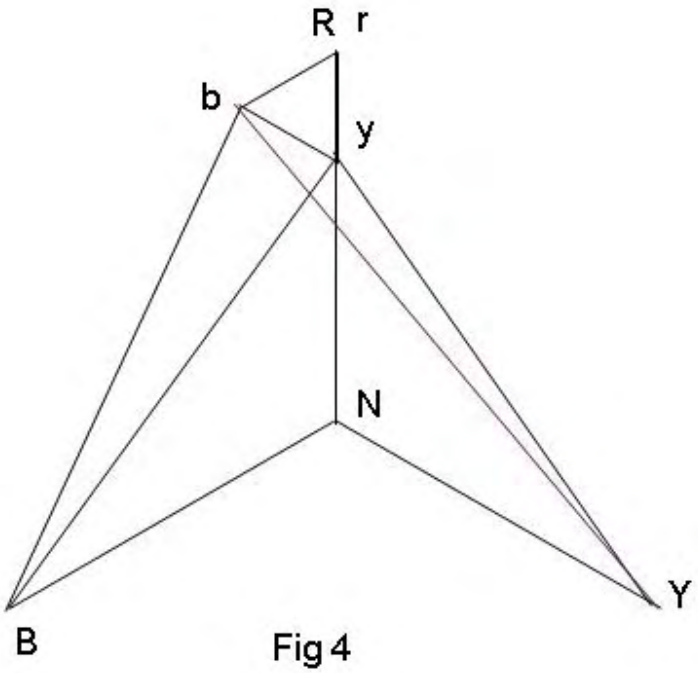

Fig 4

Star Phase Voltages: RN = YN = BN = S

Delta Line Voltages: ry = yb = br = T

Using trigonometry, following relationships are obtained:

$Yy = \sqrt{(T^2 + 3S^2 - 3ST)}$ .....**(13)**

$Yb = \sqrt{(T^2 + 3S^2)}$ .....**(14)**

$Yy < Yb$ .....**(15)**

$Bb = Yy = By$ .....**(16)**

$Ry + yN = RN$ .....**(17)**

2.3.2 Site Test Results

Voltage ratio is 420 kV / 20 kV

The site test results are given below:

RN = 259; YN = 258; BN = 257

ry = 21.3; yb = 21.4; br = 21.3

Rr = 0; yN = 237

Bb = 429; By = 428

Yy = 429; Yb = 449;

2.3.3 Analytical values

Applied voltage S ≈ 258 V

$$T = \left(\frac{20}{\left(420 / \sqrt{3} \right)} \right) x\ 258$$

$= 21.3$ *Volts*

From Eqns (13) to (17),

$Bb = Yy = By$

$= \sqrt{(T^2 + 3S^2 - 3ST)}$

$= 429\ V$

$Yb = \sqrt{(T^2 + 3S^2)}$

$= 447\ V$

$Yy < Yb$

$ry + yN = 258.3 \approx RN$

The vector group of transformer is confirmed as YNd1

2.4 YNd11

The phasor diagram is shown in Fig 5.

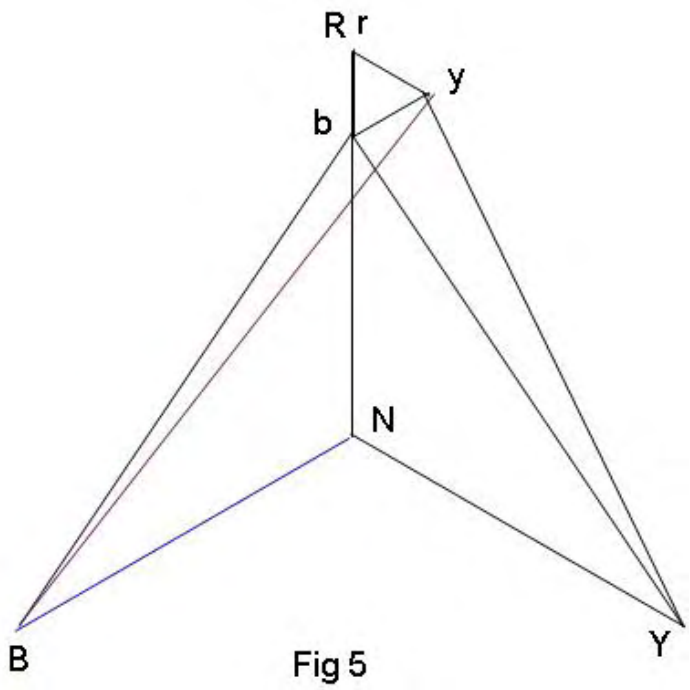

Fig 5

Star Phase Voltages: RN = YN = BN = S

Delta Line Voltages: ry = yb = br = T

Using trigonometry, following relationships are obtained:

$$Bb = \sqrt{(T^2 + 3S^2 - 3ST)} \quad \text{.....(18)}$$

$$By = \sqrt{(T^2 + 3S^2)} \quad \text{.....(19)}$$

$$Bb < By \quad \text{.....(20)}$$

$$Bb = Yb = Yy \quad \text{.....(21)}$$

$$Rb + bN = RN \quad \text{.....(22)}$$

2.4.1 Site Test Results

Voltage ratio: 220 / 33 kV

The site test results are given below:

Test done at Tap No 10 (-6.25%)

$$\text{No load voltage ratio} = \left(\frac{(220 x (1 - 0.0625))}{33}\right) kV$$

$$= \left(\frac{206.25}{33}\right) kV$$

RY = YB = BR = 410 V

rN = 236 V ; yN = 213 V; bN = 169 V

rb = 66 V; By = 417 V; Yy = 353 V

2.4.2 Analytical values

$$\text{Applied voltage } S = \left(\frac{410}{\sqrt{3}}\right)$$

$$= 236.72$$

$$T = \left(\frac{33}{206.25}\right) x\ 410$$

$$= 65.6$$

From Eqns (18) to (22),

$$Bb = Yb = Yy = 354.7\ V$$

$$By = \sqrt{(T^2 + 3S^2)}$$

$$= 415.2\ V$$

$$Bb < By$$

$$Rb + bN = 235\ V \approx rN$$

The vector group of transformer is confirmed as YNd11.

2.5 Dzn10

The phasor diagram is shown in Fig 6.

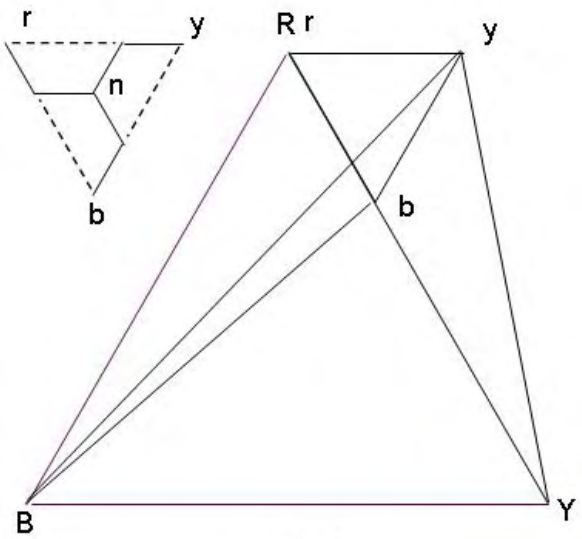

Fig 6

Delta line Voltages: RY = YB = BR = S

Zig Zag Line Voltages: ry = yb = br = T

Using trigonometry, following relationships are obtained:

$$Bb = \sqrt{(S^2 + T^2 - ST)} \quad \text{.....(23)}$$

$$By = \sqrt{(S^2 + T^2 + ST)} \quad \text{.....(24)}$$

$$Bb < By \quad \text{.....(25)}$$

$$Yy = Bb \quad \text{.....(26)}$$

$$Rb + Yb = RY \quad \text{.....(27)}$$

2.5.1 Site Test Results

Voltage ratio: 33 kV / 11 kV

The site test results are given below:

RY = 422; YB = 422; BR = 423

Ry = 141; Rb = 140

Yy = 372; Yb = 280;

By = 508; Bb = 372

2.5.2 Analytical values

Applied voltage S ≈ 422 V

$$T = \left(\frac{11}{33}\right) x\ 422$$

$$= 140.7\ V$$

From Eqns (23 to (27),

$Bb = Yy = 372$

$By = 507$

$Bb < By$

$Rb + Yb = 420 \approx RY$

The vector group of transformer is confirmed as Dzn10

2.6 YNzn11

The test is performed with both neutrals shorted. The phasor diagram is shown in Fig 7.

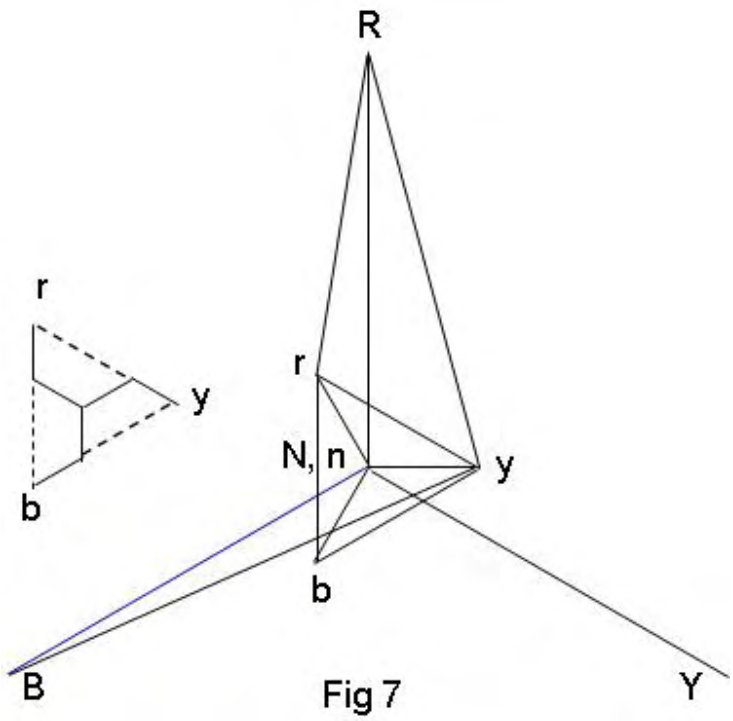

Fig 7

Star Phase Voltages: RN = YN = BN = S

Zig Zag Line Voltages: ry = yb = br = T

Using trigonometry, following relationships are obtained:

Rr = Yy = Bb

$$= \sqrt{S^2 + \left(T^2/3\right) - ST} \qquad \text{.....(28)}$$

Ry = Yb = Br

$$= \sqrt{(S^2 + \left(T^2/3\right))} \qquad \text{.....(29)}$$

Rb = Yr = By

$$= \sqrt{S^2 + \left(T^2/3\right) + ST} \qquad \text{.....(30)}$$

Rr < Ry < Rb **.....(31)**

2.6.1 Site Test Results

Voltage ratio: 220 kV / 33 kV

The site test results are given below:

RN = 243; YN = 244; BN = 245

ry = 63.0; yb = 63.3; br = 63.6

Rr = 212; Ry = 246; Rb = 275

Yr = 276; Yy = 213; Yb = 248

Br = 247; By = 277; Bb = 214

2.6.2 Analytical values

Applied voltage S ≈ 244 V

$$T = \left(\frac{33}{\left(220/\sqrt{3}\right)}\right) x\ 244$$

$$= 63.4\ V$$

From Eqns (28) to (31),

Rr = Yy = Bb = 213.1

Ry = Yb = Br = 246.7

Rb = Yr = By = 276.3

Rr < Ry < Rb

The vector group of transformer is confirmed as YNzn11

2.7 YNyn0 / YNyn6

The phasor diagram is shown in Fig 8.

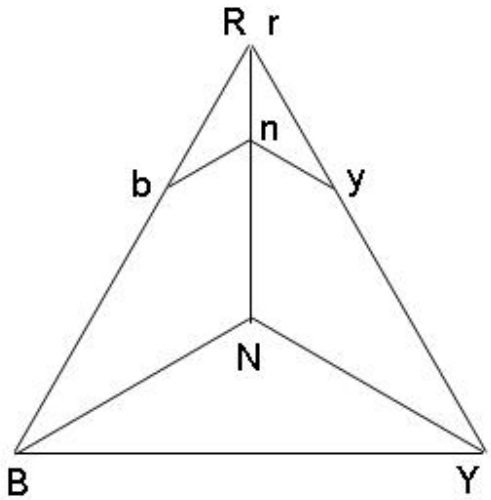

Fig 8

This case is usually trivial and following relationships hold good for YNyn0:

$Yy < Yr;\ Bb < Br;\ Nn < Nr$ **……(32)**

In case of YNyn6, following relationships hold good:

$Yy > Yr;\ Bb > Br;\ Nn > Nr$ **……(33)**

3.0 Conclusion

The inequality / equality relationships with absolute values applicable for most popularly used vector groups are derived. The practicing engineers can use the above material as ready-reckoner during vector group testing at works or site.

ieema journal

OTI & WTI – What they measure?

Dr K Rajamani,

Reliance Infrastructure Ltd., MUMBAI

(June 2011, IEEMA Journal, Page 86 to 90)

ieema journal

OTI & WTI – What they measure?

Dr K Rajamani, Reliance Infrastructure Ltd., Mumbai

1.0 Introduction

Temperature rise is one of the critical parameters specified during procurement of transformers. During testing at manufacturer's works, the observed temperature rise is compared against guaranteed values for compliance. This article addresses the underlying concepts involved and clarifies what OTI (Oil Temperature Indicator) and WTI (Winding Temperature Indicator) readings represent.

2.0 Specification

The temperature rise as specified by typical Utility, IS and IEC are compared in Table 1.

Table 1

Item	Utility A	IS-2026	IEC-60076
Yearly weighted ambient temperature	32°C	32°C	20°C
Top oil temperature rise	40°C	50°C	60°C
Average winding temperature rise	45°C	55°C	65°C
Top oil temperature	72°C	82°C	80°C
Average winding temperature	77°C	87°C	85°C

Since India is relatively hot compared to Europe, yearly weighted ambient temperature has been raised by IS to 32°C compared to 20°C as per IEC. Oil and winding temperatures as per IS & IEC are nearly same. This is achieved by lowering the allowable temperature rise by 10°C compared to IEC. Typical utility specification results in very conservative design. The temperature rise limits are 10°C lower than that specified in IS.

3.0 OTI & WTI

Among the two, Oil temperature indication is directly measurable. In majority of cases, winding temperature indication is a calculated value using a formula based on thermal imaging. In some cases, fibre optic sensors are embedded between the discs of the windings to directly measure the winding temperature.

The only stage when the winding temperature is actually measured is during the temperature rise test of transformer. The temperature rise is basically due to losses in the transformer which acts like a heater immersed in oil. The test is done by applying

IEEMA Journal, June 2011, Page 86 to 90

low voltage on HV side with LV shorted and power input is equal to the sum of guaranteed no load loss and load loss. This is illustrated with an example.

Transformer Rating: 125 MVA, 220 / 33 kV. Tapping range is +5% to -10%.

The guaranteed total losses = 375 kW

At extreme negative tap,

Rated voltage = 220 x 0.9

= 198 kV

$$\text{Rated current} = \frac{125{,}000}{\left(\sqrt{3} x 198\right)}$$

= 365 A

Short circuit impedance = 14.53%

Impedance voltage = 0.1453 x 198

= 28.8 kV

Since the test is done at low voltage, the no load loss will be lower than at rated voltage. To inject guaranteed total losses, during heat run, applied voltage is slightly higher than impedance voltage. In this case, the injected current will be higher than rated current. Increased load loss will compensate for reduction in no load loss to maintain guaranteed total loss as input. Since the no load loss is only about 20% to 30% of total loss, the increase in current is marginal during testing. After the temperature has stabilized, the applied voltage is reduced to pass exactly rated current in the winding. Then the supply is cut off and immediately the resistance of the winding is measured.

The above complex procedure is adopted due to the limitation of test set up. At manufacturer's work, it is difficult to pass rated current at rated voltage. Hence the only option is short circuit test method. To measure temperature rise, it is necessary to inject the guaranteed losses. But to measure winding temperature, it is necessary to inject rated current. The hot winding temperature measured at works (by extrapolating at zero time) is 'Average winding temperature'. This is because the temperature is 'calibrated' based on the DC resistance of the whole winding.

It must be emphasized that during entire heat run test, only the Oil temperature is continuously monitored and measured. Winding temperature is measured indirectly *only at the end of heat run test*. During heat run test healthiness of OTI, if mounted, can be checked. But soundness of WTI readings can not be checked during heat run. Calibration of WTI itself is possible only after the end of the test and 'Average winding

temperature' is evaluated which leads to estimation of winding gradient. Hence during heat run, entering WTI readings periodically has no practical utility.

In this context, it is very pertinent to point out that the following statement is sometimes made in technical offer or test reports – 'guaranteed temperature rise of X°C *over an ambient of* Y°C'. This statement is fallacious as temperature rise is independent of ambient temperature. For the same total loss, temperature rise is same in summer or winter.

There is no confusion in guaranteed oil temperature rise as it is directly measured quantity both at works during testing as well as in service during running. Hence OTI reading does not pose conceptual problems. But the significance of guaranteed winding temperature rise ends almost with the heat run test. This corresponds to 'Average winding temperature', whilst during service what WTI measures is the 'Hot spot temperature' of the winding.

4.0 Winding Hot Spot Temperature

In Fig 1, winding immersed in oil is shown.

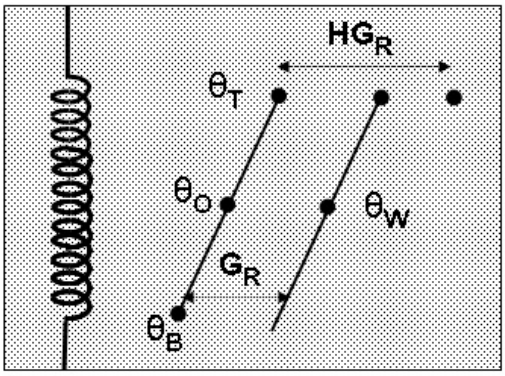

Fig 1

θ_T: Top oil temperature

θ_B: Bottom oil temperature

Average oil temperature $\theta_O = (\theta_T + \theta_B) / 2$

Average winding temperature θ_W is derived from resistance measurement when the winding was carrying rated current just before disconnection of power supply.

Average winding gradient = $\theta_W - \theta_O$.

This is the temperature gradient between conductor (copper) and surrounding oil. It is a function of heat flux generated within the conductor (watts/m^2), temperature drop across paper insulation and heat carried away by oil. The heat flux is directly proportional to

copper (I^2R) loss within the conductor and the surface area presented to oil for heat dissipation. Two important facts follow from the above: (a) It is not true that LV winding gradient is always greater than HV winding gradient. The gradient is function of copper loss per m^2 of surface area for each winding. (b) Winding gradient is not influenced by core loss.

Typical average winding gradient is 10°C to 20°C.

As per IEC – 60076,

Hot spot gradient Hgr = 1.3 x Average winding gradient

WTI is calibrated based on the following equation:

$$\theta_{WH} = \theta_T + Hgr \left(\frac{I}{I_{RAT}} \right)^n \qquad \text{.....(1)}$$

θ_{WH} : Hot spot temperature as indicated by WTI

θ_T : Top oil temperature

Hgr: Hot spot gradient

I: Actual current as measured by CT and given as feedback to measurement instrument

I_{RAT} : Rated current

n : exponent (between 1.6 to 2)

The WTI measurement thus is a 'calculated' value based on Eqn (1) and depends on Hgr (Hot Spot Gradient) value fed into the measurement device. For old transformers test records may not be available. In such cases, only an estimated value of Hgr is input to the device. As a conservative option, higher value of Hgr (say 25°C) is used.

5.0 OTI & WTI Measurement – Conventional and Modern

In conventional OTI / WTI, one or two thermo-well pockets are provided on the transformer tank cover. They are typically 150 mm long. In the pocket oil is filled and a bulb with temperature sensing element like a RTD (PT100) is inserted. RTD measurement is taken as Top Oil Temperature. To get winding temperature, current proportional to rated current of transformer is passed through standard resistance of WTI. The temperature rise due to I^2R represents the hot spot gradient. For the selected R, the rated current could be 1A, 1.6A, 2A. etc which produces the temperature corresponding to desired gradient. If the rated current of protected winding is 2092A (25 MVA at 6.9 kV), the CT ratio for WTI is chosen as, say, 2092/1.6A. Thus, we end up with odd CT ratio for WTI where the primary current is the rated current of winding and secondary current is the rated current of resistor.

But in modern microprocessor based stand-alone OTI/WTI or Digital RTCC which has inbuilt OTI/WTI, 3 wire PT 100 signal from thermo-well pocket is wired to the device for OTI measurement. In addition current and voltage signals from conventional CT and PT are also wired to the device. The winding rated current, CT and PT ratios, hot spot gradient at rated current, exponent 'n' in Eqn (1), set points for alarm and trip are all settable through HMI. The device internally generates WTI reading based on Eqn (1) through software. The device generates OTI / WTI readings and alarm / trip signals and communicates to local RTU on Modbus, IEC 103 or IEC 61850 protocols. The device can also generate (4-20) mA signals for OTI and WTI for use in local indication in transformer marshalling box. The device detects any open circuit in PT100 signal and inhibits OTI / WTI operation.

6.0 OTI & WTI Alarm & Trip settings

If the transformer has been designed for a specified top oil temperature rise of 40°C, the actual temperature rise at site at rated current is found to be less than 30°C in majority of the cases and between 30°C and 35°C in a few cases. Assuming the maximum ambient temperature as 45°C with coincidental rated current in transformer, the OTI reading at extreme case could be 80°C. With a margin, OTI alarm setting could be 85°C. The WTI alarm setting should preferably be slightly less than OTI alarm setting plus Hot spot gradient (Hgr). If Hgr used in device is 15°C, WTI setting could be 95°C (< 85+15).

With the above alarm settings, WTI alarm will mostly denote over load. Only in case of cooling circuit failure, OTI alarm will come first even in case of part load operation. OTI and WTI trip setting could be 10°C more than alarm setting. i.e. 95°C and 105°C respectively.

For normal cyclic loading, IEC-60076 recommendations for OTI and WTI trip settings are higher, i.e., 105°C and 120°C. Thus, the suggested OTI and WTI trip settings of 95°C and 105°C are conservative and on safer side.

7.0 Relevance of OTI & WTI in different systems

In case of power plants, the transformers (Generator Transformer, Station Transformer, Unit Auxiliary Transformer) are designed based on worst loading criteria. In these cases, the loading on the transformer can not exceed the rated value unless the design itself is faulty. For example, typical capacities of GT for different unit sizes are given in Table 2.

Table 2				
Unit Size (MW)	250	300	500	600
GT Size (MVA)	315	370	600	750

The probability of the current through GT exceeding the rated current is very small. In this case, only OTI is more relevant, as oil temperature might rapidly rise, even under part load, in case of cooling circuit failure. WTI has no practical significance as there is very little chance of transformer overloading. In Eqn (1), (I/I_{RAT}) is always less than unity. The same arguments hold good for Station Transformer and Unit Auxiliary Transformer in power plants.

In transmission systems, transformer loading is as per power flow dictated by network conditions and load-generation geometry. In distribution systems, power flow through transformers is as per downstream load requirements. In both cases, the chances of transformer overloading are present. OTI and WTI are both relevant in these cases.

8.0 Oil Volume

There is a misconception that transformer with higher oil volume capacity is inherently superior from cooling point of view. Two transformers, say 100 MVA rating, can have oil capacity of 40 Kilolitres and 50 Kilolitres but both can satisfactorily meet temperature rise requirements. It should be emphasized that the oil volume plays a significant part when the transformer is heated from the cold as in 'heat run test' at works. Transformer with a higher volume may take more time to reach steady state value. Typical heating curve, from heat run test, is shown in Fig 2. From the tangent drawn at origin, the thermal time constant can be evaluated. Incidentally, to accurately estimate thermal time constant, the initial temperature readings during heat run test shall be taken at frequent intervals, say every 10 minutes in the first one hour. Typical thermal time constant of oil could be 1 to 3 hours while that of winding (which is a metal – copper) could be 3 to 5 minutes.

A well designed cooling system consisting of pumps, fans and heat exchangers like radiators can take care of limiting the temperature rise for a given oil volume in steady state operation. Of course, oil volume will not be absurdly low, as it is determined by physical dimensions of core-coil assembly and clearance with tank.

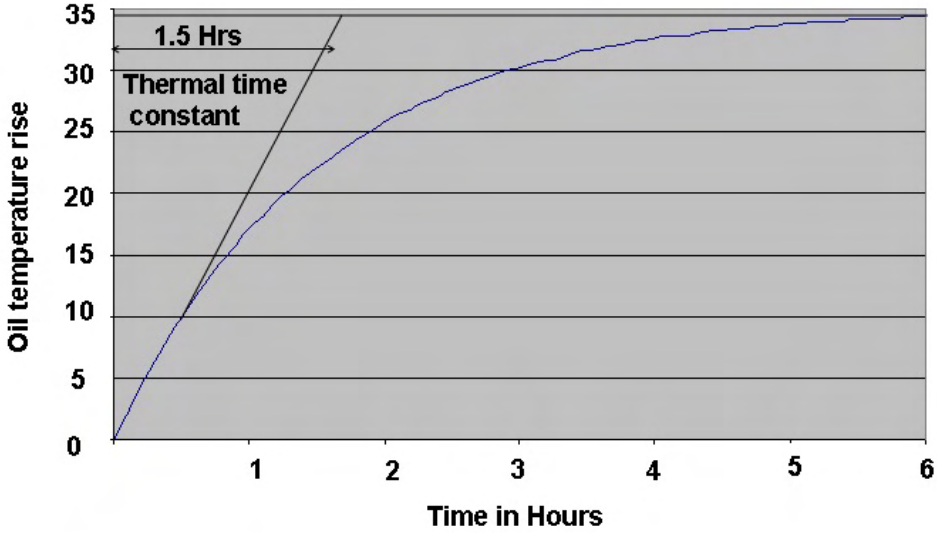

Fig 2

9.0 Insulation Life

The age of transformer is synonymous with that of insulation. The loading of transformer is reflected as winding temperature. The effect of winding temperature on insulation life is discussed in detail in Ref [2]. The relative rate of using life in hours for normal Kraft paper is shown in Fig 3.

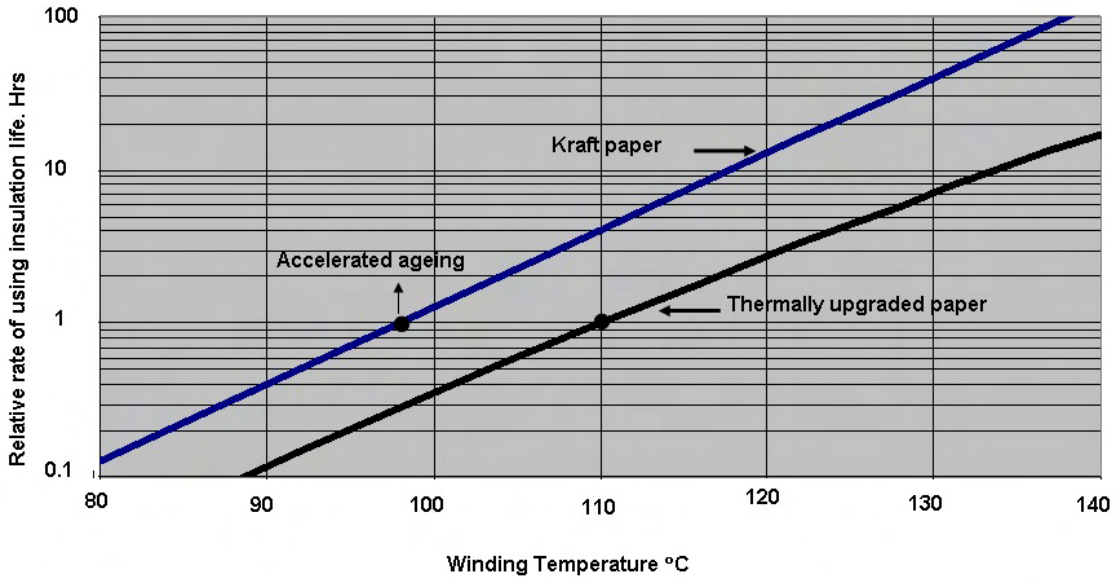

Fig 3

It can be seen that below 98°C, the ageing is normal but above 98°C, accelerated ageing sets in. Hence over the long run, the winding hot spot temperature should not exceed 98°C. In Table 3, tested values for 125 MVA transformer are given under column 3. The expected values under increased loading conditions (141 MVA – 113%) are given under column 4. Upto 113% loading, normal ageing is obtained (hot spot temperature is within 98°C). This is the basis for the popular perception that, generally 10% over loading of transformer even at frequent intervals is allowed without degrading insulation life.

Table 3

Sr No	Item	Base Load 125 MVA	Increased load 141 MVA
1	Average gradient °C	17 (*1)	21.6 (*2)
2	Hot spot gradient °C (*3)	22.1	28.1
3	No load loss KW	65(*1)	65
4	Load loss KW	325(*1)	414 (*4)
5	Total Loss KW	390	479
6	Top Oil Temp Rise °C	31(*1)	38.1 (*5)
7	Yearly Average ambient temperature °C	32	32
8	Hot spot temperature °C (7 + 6 + 2)	85.1	98

*1: Obtained from type test at works

*2: $(141/125)^2$ x 17 = 21.6°C (exponent 2 – for forced directed air flow)

*3: Hot spot gradient = 1.3 x Average gradient

*4: $(141/125)^2$ x 325 = 414 KW

*5: (479/390)*31 = 38.1°C

Thermally upgraded paper, if used instead of conventional Kraft paper, permits higher hot spot winding temperature. In the former case, the accelerated aging starts only after 110°C as against 98°C for Kraft paper. In this case, OTI and WTI alarm and trip levels can be set much higher.

10.0 Fibre Optic Sensors for WTI

The new trend has been to specify the use of fibre optic sensors for direct reading of winding temperature. Usually 8 channels are used, one for Top Oil, 3 for HV winding (R,

Y, B phases), 3 for LV winding (R, Y, B phases) and one for core. It must be emphasized here that accuracy per se is not sacrosanct in WTI measurement. If true value of WTI is above 98°C, transformer is not going to fail immediately. It might lead to loss of insulation life but this is negligible if the WTI value is below 98°C for most of the time.

For transformers in power plant applications, where the winding currents are not expected to exceed rated values as explained in Cl 7.0 fibre optic sensors do not have any value addition. In transmission and distribution systems, where load variations can be erratic and sudden, it can be applied on a trial basis. Fibre optic sensor is not the panacea for transformer trouble diagnostics. The supreme tool in this regard is DGA done at periodic intervals.

11.0 Conclusion

The main tenet of this article is to clarify the basic concepts with respect to temperature rise of oil and winding of transformer. The subtle differences between OTI and WTI are explained. The relevance of OTI and WTI for transformers in generation, transmission and distribution systems is brought out. The effect of temperature on insulation life and over load capability of the transformer are described in brief. The material presented here will enable the practicing engineers to operate the transformers to the maximum capacity without sacrificing life.

12.0 References

[1] IEC 60076-7: Loading guide for oil immersed power transformers

[2] 'Overload protection of electrical equipment', K Rajamani, IEEMA Journal, June 2004, pp 30-34.

ieema journal

Fault Passage Indicator Application in Distribution Systems

Dr K Rajamani and Bina Mitra,

Reliance Infrastructure Ltd., MUMBAI

(March 2013, IEEMA Journal, Page 102 to 107)

Fault Passage Indicator Application in Distribution Systems

Dr K Rajamani and Bina Mitra, Reliance Infrastructure Ltd.,Mumbai

1.0 Introduction

All large urban distribution systems in India are undergoing major up-gradation. As part of up-gradation process following are implemented in stages:

(i) Replacement of old MV switchgear with either SF_6 or Vacuum switchgear.

(ii) Introduction of modern numerical relays having recording facility of on-line values and communication capabilities to talk to Control Centre.

(iii) Introduction of Ring Main Units (RMU) as a replacement for old oil switches in distribution systems. These RMUs are motorized in some substations for remote operation from Control Centre.

(iv) Installation of Fault Passage Indicators (FPI) all over the distribution network. These devices enable one to locate the fault with minimum trial and error. This leads to faster isolation of faulty section and lesser downtime for customers.

(v) Establishment of Control Centre which incorporates SCADA (Supervisory Control and Data Acquisition System) and DMS (Distribution Management System) for monitoring and control of entire distribution network.

This article covers the design features of FPI, installation techniques, fault location methodology, and some non-conventional application of FPI in other areas. Majority of distribution (almost 99%) is through under ground cable network in Mumbai distribution. Hence the discussions in sequel pertain generally to cable systems though the concepts can be extended to over head distribution network.

2.0 SCADA – DMS

Here the demarcation of control boundaries between SCADA and DMS is explained. Refer Fig.1. The scope of SCADA starts from EHV to 33kV and to 11 kV outgoing breakers in Receiving Stations. The scope of SCADA ends with control of outgoing 11 kV breakers at Receiving Station. From the outgoing breaker feeder in Receiving Station, Ring Main is formed for sub-distribution. The location where RMUs are located is termed as Substation. Along the Ring Main, RMUs are placed. Each RMU will have typically two isolators to connect both sides of ring. A breaker is provided within RMU for control of 11 / 0.433 kV transformer, termed as DT (Distribution Transformer). The DT rating varies from

March 2013, IEEMA Journal, Page 102 to 107

400 KVA to 2000 KVA. Further distribution at LV levels is through LT switchgear, main pillar boxes and feeder pillar boxes.

The Ring Main can start from one Receiving Station and terminate on the same Receiving station or it can terminate on another Receiving Station. Typically the route length of Ring Main is from 5 to 10 KM. At every 1 to 2 KM, substations are located on the way. Usually the Ring is broken in the middle, and the particular open point is called NOP (Normal Open point). This is to ensure that in case of fault on Ring Main, only half the ring is affected. If the Ring Main emanates and terminates on the same Receiving Station, two halves of the ring is fed from two different bus sections in Receiving Stations.

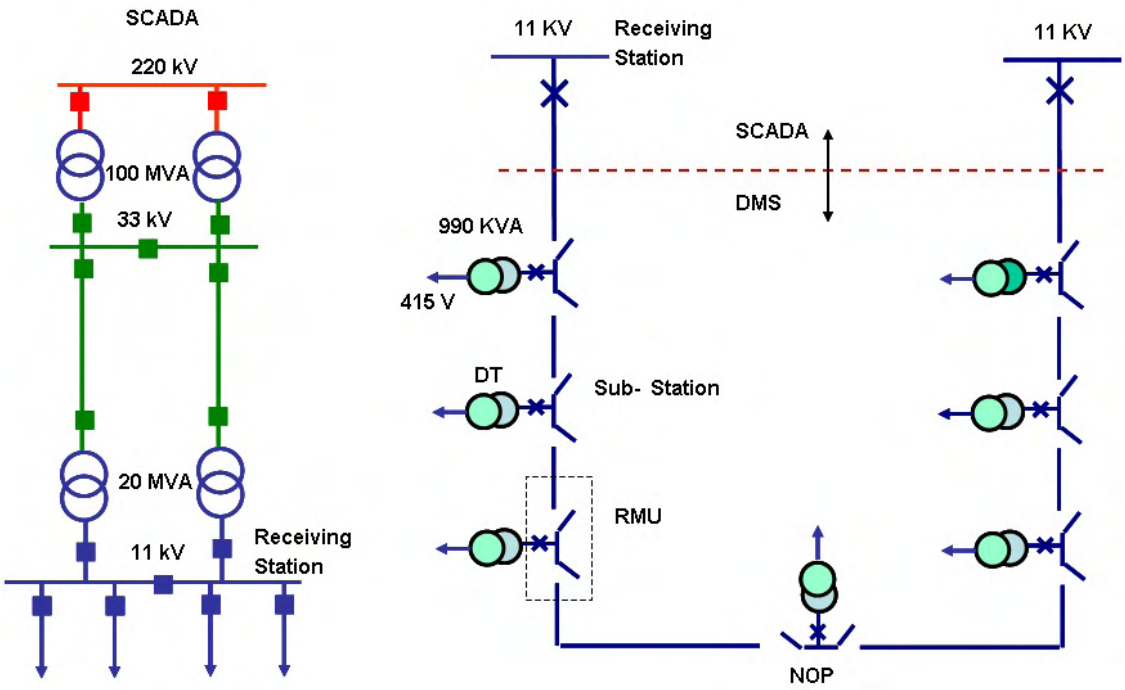

Fig 1

3.0 Fault Passage Indicator

It is a device to detect fault current passing through a network element. If used for individual cores of cables, it can monitor all types of faults (earth fault, phase fault, etc). More than 70% of faults in distribution system are earth faults. Hence FPIs in general are installed to detect earth fault. It consists of a sensor and indicator. Refer Fig 2. Sensor is a split core CBCT (Core Balance Current Transformer) fixed over the cable under supervision. Split core type sensor enables easy fixing on the existing cable. Since it covers all three cores of cable,

under healthy conditions, the net flux through sensor is zero. Whenever earth fault current passes through cable, the resulting unbalanced flux causes voltage to develop across CBCT. The indicator which is connected to CBCT by special cable picks up when CBCT senses earth fault current. The contacts of indicator are used for local indication and remote monitoring.

FPI Sensor and Indicator

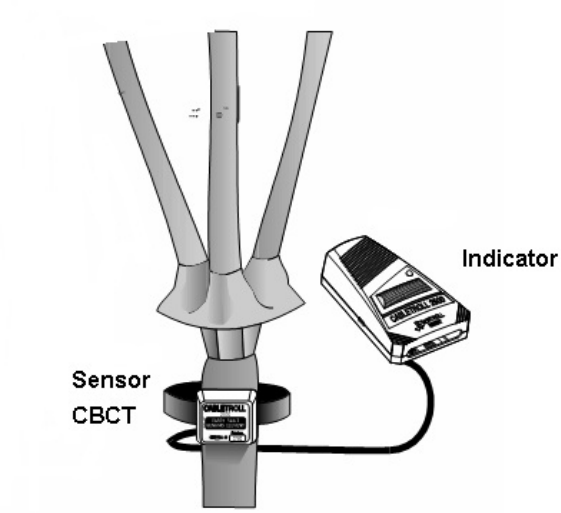

Fig 2

4.0 FPI Functional Requirement

(i) The pickup setting for ground fault current in FPI – It is settable between 100A to 400A. Recommended setting is 240A and will avoid spurious pickup in majority of cases.

(ii) The pick up time is set at 30 msec. This time should be *less than* Receiving Station breaker operating time, typically 100 msec considering relay operating time. If the breaker opens before FPI pickup time, the feeder is dead and FPI *will not sense* any fault.

(iii) Once FPI picks up, local indication (flashing LEDs) will appear. LED flashing rate is adjustable, typically every second. The LED flashing resets after set time delay from 30 minutes to 4 hours. Typically it is set for 2 hours. It is expected that within 2 hours, a person will reach the substation on occurrence of fault to see the status of FPI (glowing or non-glowing).

(iv) As soon as FPI picks up, contacts for remote indication change status. In Automated RMU stations, these contacts are wired to FRTU (Field Remote

terminal Units) located within substation. FRTU is connected to Control Centre through communication medium. Thus FPI pickup status in substations with automated RMUs is immediately available to operator in Control Centre.

(v) After FPI has picked up it can be reset in following ways:

(a) Locally if the person visits the substation; otherwise after the set time delay, say 2 hours, it will automatically reset {Refer (iii) above}.

(b) If by chance, the feeder is again charged by closing Receiving Station Breaker before the set elapsed time in (iii) above, the FPI gets reset.

(c) In case of automated RMUs, it can be reset by remote command from Control Centre.

(vi) The unit is powered by battery (e.g. Lithium). The battery is designed for typically 1000 blinking hours of FPI. Since the faults do not occur frequently on the feeder, the blinking hour data does not have too much practical significance. The concern is the life of battery itself. Based on field experience, it is recommended to change the battery every four to five years irrespective of the number of blinking hours of FPI in the past.

5.0 Fault Identification procedure

A typical Ring Main is shown in Fig 3.

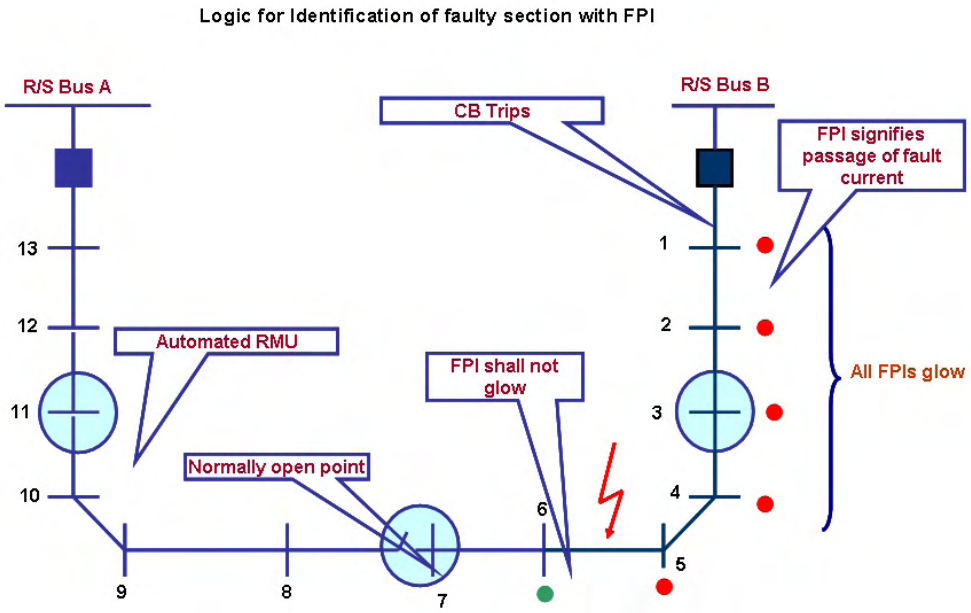

Fig 3

It has 13 substations. 7th Substation is NOP (Normal Open Point) to isolate the ring into two sections. Most of the RMUs are generally manual operated RMUs (non-motorised). In these cases, RMUs have to be operated by a person in substation. With the present trend towards implementation of DMS, generally three motorized RMUs are used in a ring and placed at strategic locations. One of the three will be NOP. The advantage with motorised RMU is that the isolator can be opened or closed by issuing commands remotely from Control Centre. Substations 3, 7 and 11 have motorized RMUs (also called automated RMUs). All the RMUs (both manual and automated) are fitted with FPIs. In case of automated RMUs, FPI indication is available at Control Centre.

In case of fault in the ring main, only the breaker at Receiving Station can clear the fault after set time delay. Isolators of RMU are not designed to break fault currents. Consider a fault between substations 5 and 6. The breaker at R/S Bus B will clear the fault. Before breaker at Receiving Station trips, FPIs upto substation 5 will pick up and start glowing. The most probable location of fault is between the non-glowing FPI (at substation 6) and adjacent glowing FPI (at substation 5). FPI at 3 also would have picked up. Since automated RMU is in the faulty section of ring main, FPI pick up at 3 will be transmitted to Control Centre. The operator at control centre immediately recognizes that fault is beyond 3 as FPI at Substation 3 has picked up. The section between Receiving Station and Substation 7 is already open because of breaker tripping at the Receiving Station end. The operator issues the command to open the isolator of automated RMU to isolate sections beyond 3 towards 7. Then the breaker at Receiving Station is closed. The supply gets restored to all the substations till 3. Since these actions are done remotely from Control Centre, supply restoration for part of the ring can be done within a minute. No local visit to substation is required for this. For further fault finding, a person visits substations beyond 3 and identifies the substation which has non-glowing FPI. In Fig 3, he will physically operate the RMUs locally at substations 5 and 6 to isolate the faulty section. Trial and error procedure in fault isolation is eliminated.

6.0 Number of FPIs on RMUs

RMUs have different configurations depending on local substation requirement. The basic configuration can be two isolators (one incomer and the other outgoing) with breaker for DT. Refer Fig 4. In this case FPI on outgoing isolator

will suffice, irrespective of power flow direction. If the feeder is charged from left, (top figure), fault will be located between glowing FPI -2 and non-glowing FPI - 3. If the feeder is charged from right, (bottom figure), fault will be located between glowing FPI -3 and non-glowing FPI - 2.

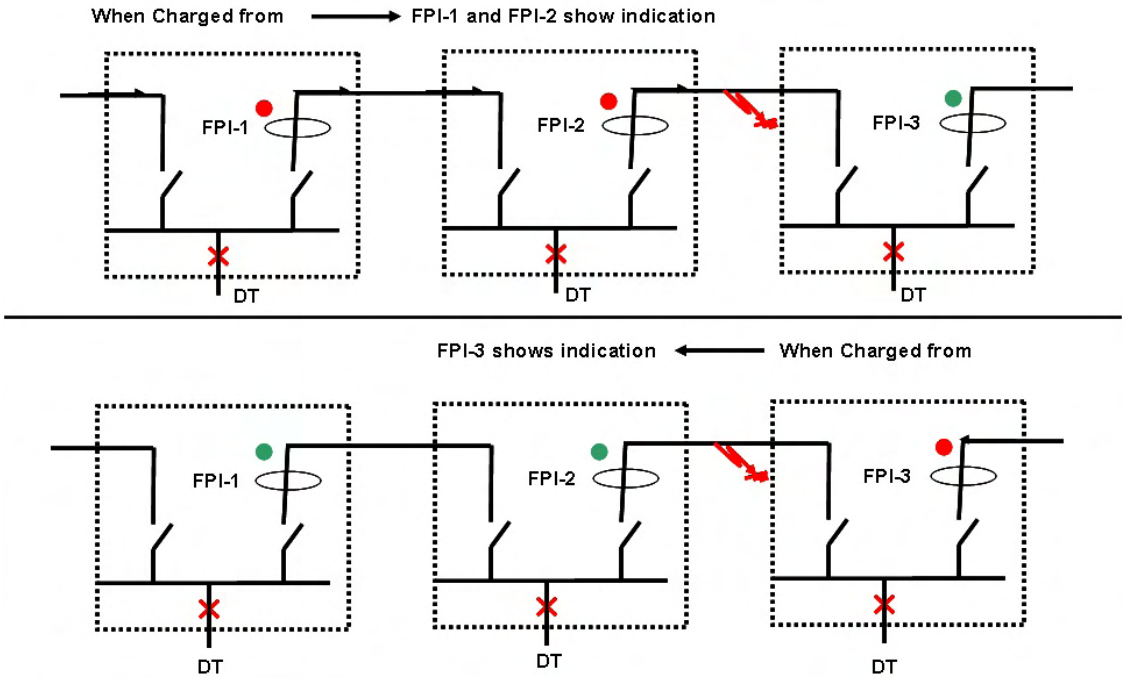

Fig 4

In Fig 5, a more complex RMU configuration is shown with more than one incomer and outgoing. Power flow direction in this case is difficult to predict. In these cases, it is usual practice to put FPI on *every i*solator to cover all operating conditions.

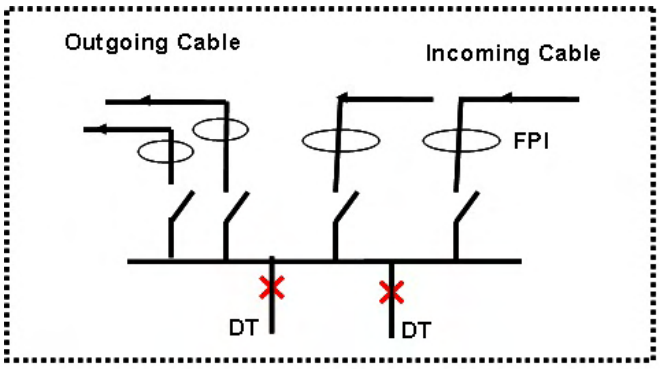

Fig 5

7.0 Sensor installation procedure to minimize mal-operation of FPIs

(i) Cable earthing should pass through CBCT (sensor) if lead sheath or armour is passing though CBCT (Option 1). If armour is not passing through CBCT, then cable earthing also should not pass through CBCT (Option 2). Refer Fig 6 for correct and incorrect connections. In case of incorrect connection, flux due to fault current on R phase conductor is cancelled by current flowing through armour and net CBCT output is zero (theoretically) and FPI will not pick up.

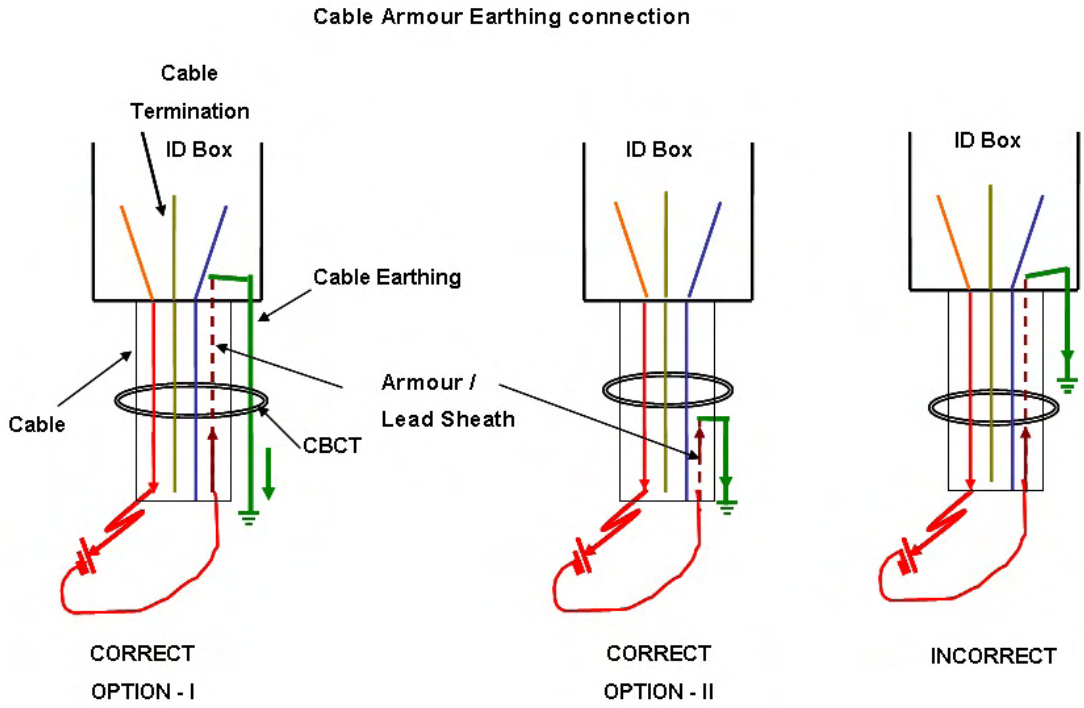

Fig 6

(ii) Cable earthing of each feeder should be connected separately to the earth bus. Cable earthing should not be looped. Refer Fig 7 and Fig 8.

(iii) Cable earthing should not be connected to switchgear body. Fig 9.

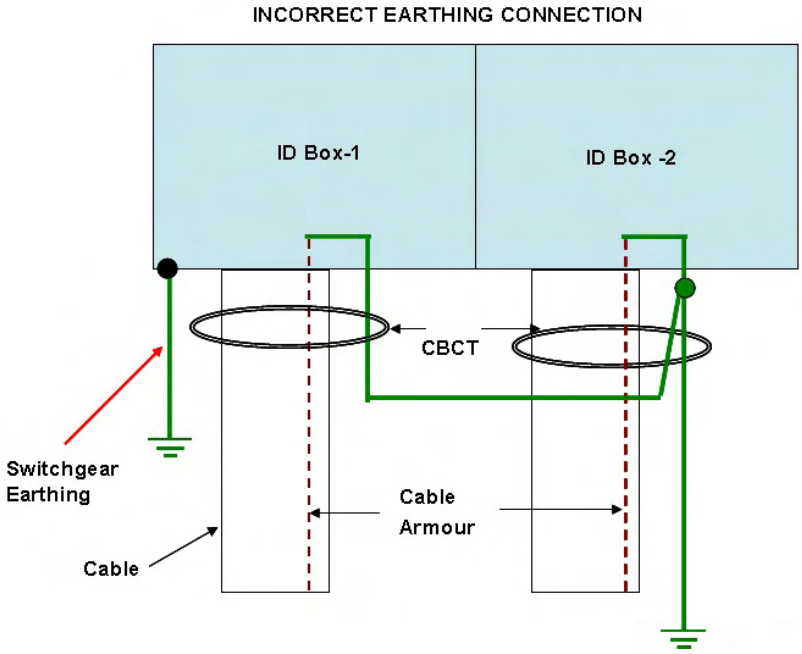
INCORRECT EARTHING CONNECTION
ID Box-1
ID Box -2
CBCT
Switchgear
Earthing
Cable
Armour
Cable

Fig 7

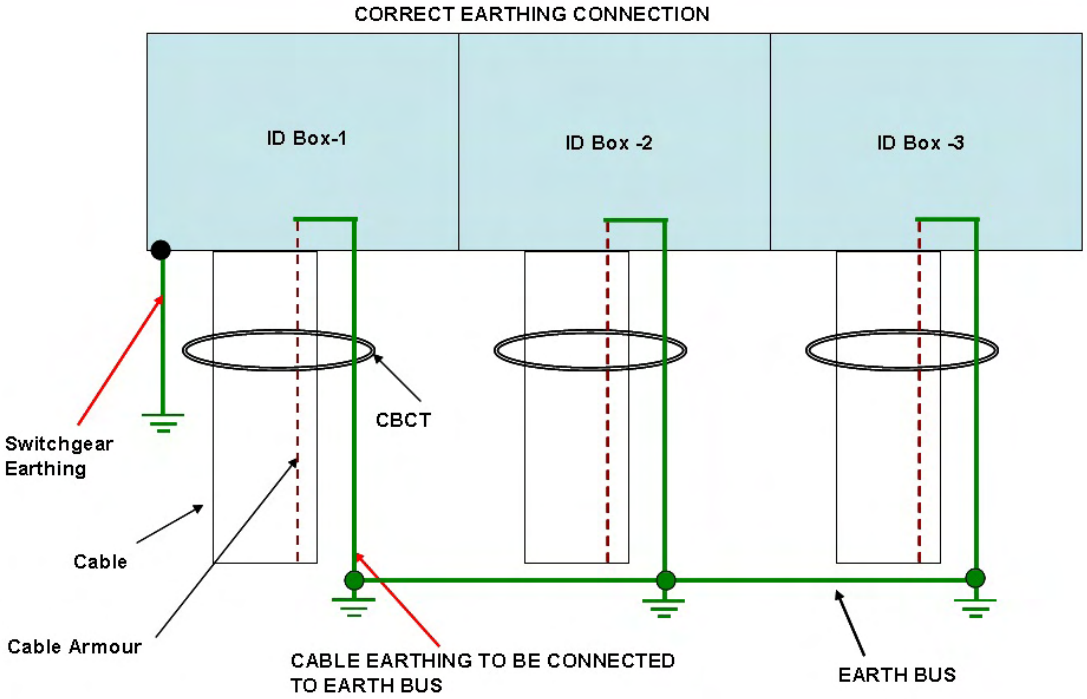
CORRECT EARTHING CONNECTION
ID Box-1
ID Box -2
ID Box -3
CBCT
Switchgear
Earthing
Cable
Cable Armour
CABLE EARTHING TO BE CONNECTED
TO EARTH BUS
EARTH BUS

Fig 8

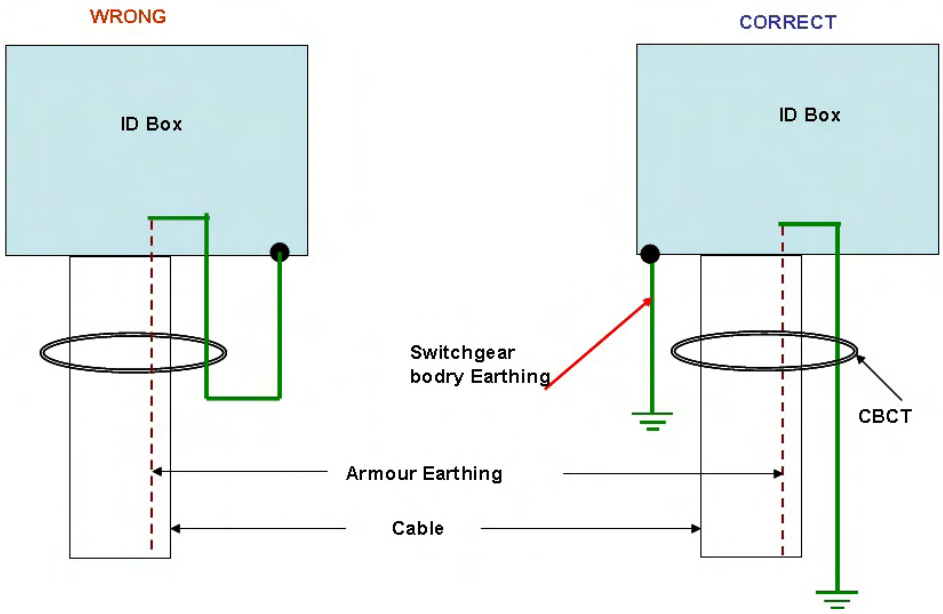

Fig 9

(iv) In some locations, FPI mal-operation has been attributed to physical location of CBCT. In one location, existing CBCT of RMU was found faulty. A new CBCT was located well above the trifurcation point to avoid removing the faulty CBCT. Refer Fig 10.

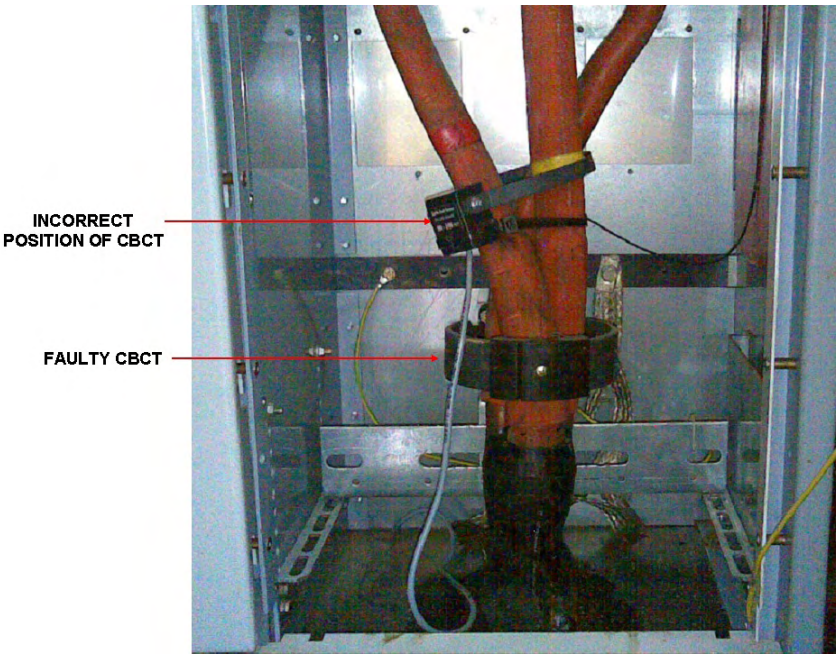

Fig 10

It was found that the voltage induced on CBCT to ground was of the order of 190V and FPI started mal-functioning. Then it was decided to remove the faulty CBCT and lower the new CBCT to almost the level where trifurcation just begins. Refer Fig 11. Induced voltage on new CBCT reduced to few millivolts and FPI malfunctioning also stopped. Hence, it is recommended to mount the CBCT very near the trifurcation point to prevent the FPI from getting activated owing to undesirable / spurious voltage induction from un-screened / un-shielded stretch of cable sections after termination points in cable box.

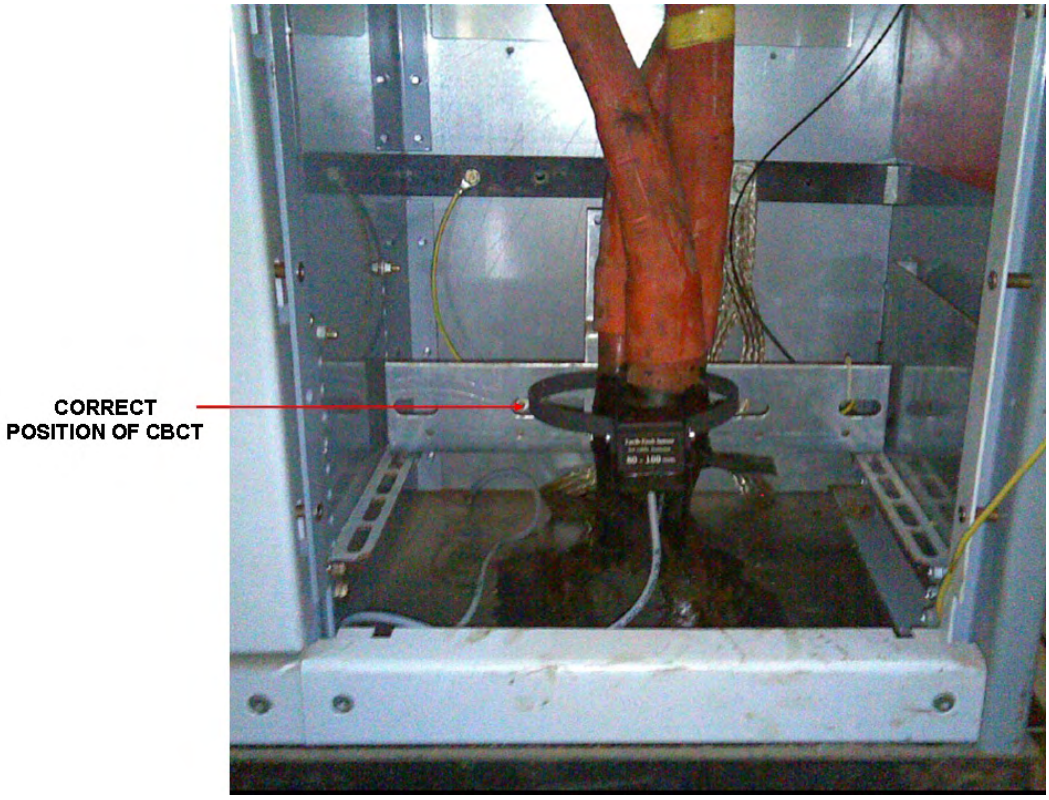

Fig 11

Items (ii) and (iii) above are based on feedback from field experience rather than any profound theoretical analysis.

8.0 FPI application in non-conventional situations

(i) A Receiving Station has, say, a 7 or 9 panel board. But due to load growth, some more outgoing Ring Mains have to be fed. But the switchboard can not be expanded due to, say space constraints. In these cases, one of the

practical solutions adopted is to connect two Ring Main feeders to one breaker. This is popularly called 'double box arrangement'. Usually the current rating of breaker (630A or above) should be able to handle loads of both the feeders. If there is fault in any feeder, breaker will trip resulting in tripping of both feeders. The operator in Control Centre will get indication of breaker tripping but will not know in which of the two feeders fault has occurred. One way to overcome the problem is to mount FPI on each of the feeders. Refer Fig 12. The contact of FPI is wired to RTU (Remote Terminal Unit) located in Receiving Station. The Control Centre gets the status indication from RTUs. In this case, as soon as the breaker trip indication comes, the operator also gets which FPI has picked up and hence is able to identify the faulty feeder. He can immediately ask the local person in Receiving Station to isolate faulty feeder and recharge the healthy feeder. No trial and error operation is involved. The application of FPI in this case is in Receiving Station rather than Substation.

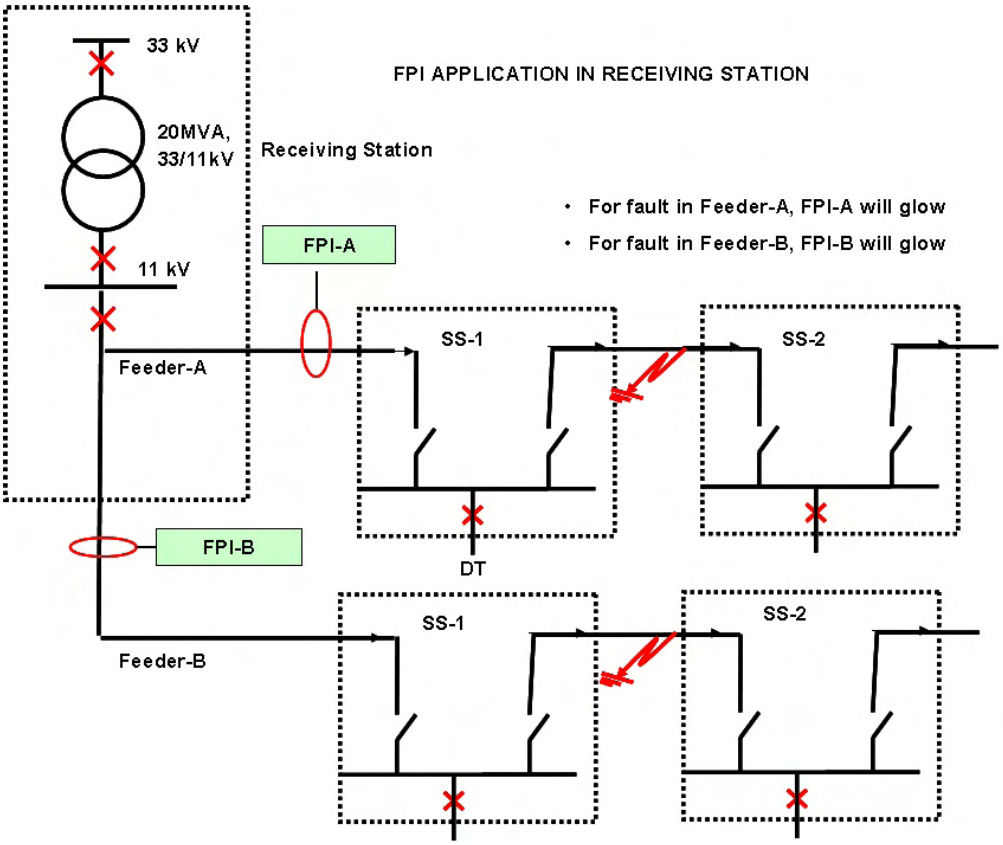

Fig 12

(ii) Another application was suggested and tried by field staff. LT distribution is usually carried out through multi-way (typically 8 way) feeder pillar boxes with each circuit protected by HRC fuse. If one fuse (say R phase) blows, it results in large neutral current flow. *It goes undetected*. Any increase in neutral current increases the losses in the system. An experiment was conducted in one of the circuits of a feeder pillar. The cable was a 4C x 240 mm^2 PVC cable. Under normal conditions, currents were measured as I_R = 235A; I_Y = 256A; I_B = 232A; I_N = 30A. A split core CBCT sensor was mounted on the cable and the neutral was kept out of CBCT. Sensor was connected to FPI. For simulation purpose, B phase fuse was removed. Immediately FPI picked up. The neutral was carrying 143A. Of course, this exercise by itself is not very useful unless FPI pickup can be transmitted to Control Centre through low cost communication systems. In a typical urban distribution system, the number of feeder pillar boxes is in thousands and hence the communication cost shall be very low to make this viable at LT level. This is a challenge and opportunity for major vendors.

9.0 FPI Tester

For a typical distribution system of modern metro city, the number of FPIs can vary from 5,000 to 15,000. Considering the importance of fault location, it is essential to check the healthiness of FPI (sensor and indicator). It is recommended to buy at least 10 FPI testing units for periodic checking. Two versions are available.

(i) In self powered version, no permanent external auxiliary supply is needed. The unit is powered by a rechargeable battery with a separate charger for the same. Once battery is fully charged, it can be used as portable tester. The current output from the kit is low, say 20A. If the test current required is 200A, then through CBCT under test, 10 turns of test lead shall be wound to achieve same AT (200A x 1 Turn = 20A x 10 Turn). The unit is lighter, say 3 to 4 kg.

(ii) In separately powered vision, the unit requires 230V auxiliary supply. The schematic diagram is shown in Fig 13. The unit can deliver a much higher current, even upto 300A. This unit is heavier (up to 8 to 10 kg) compared to self powered version.

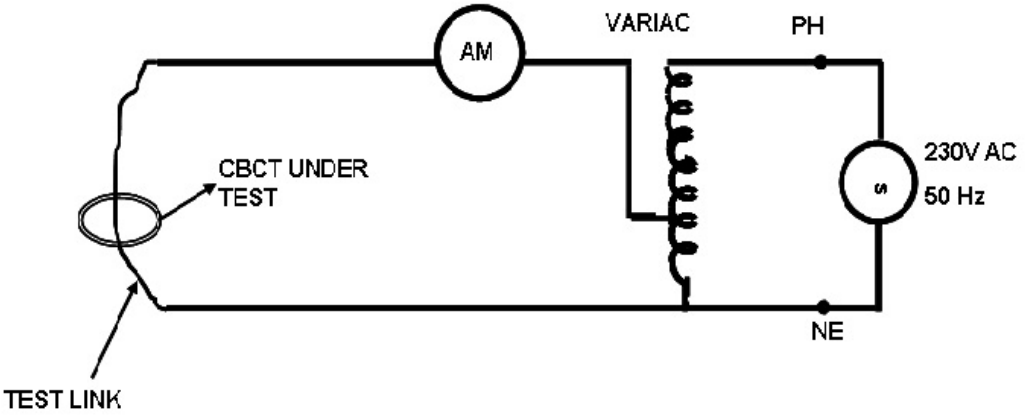

Fig 13

10.0 FPI status reporting and FLISR

One of the most powerful applications of DMS (Distribution management System) is FLISR (Fault Location, Isolation and Supply Restoration). FLISR is triggered by breaker trip status sent by Receiving Station RTU to Control centre. For locating the fault, it uses the FPI status sent by FRTU in automated RMU substations. Many times, the fault location portion of FLISR does not work properly due to time stamping problem as explained further. As stated in Cl 4 (ii), FPI pickup shall be faster than breaker opening time at Receiving Station. Refer Fig 14.

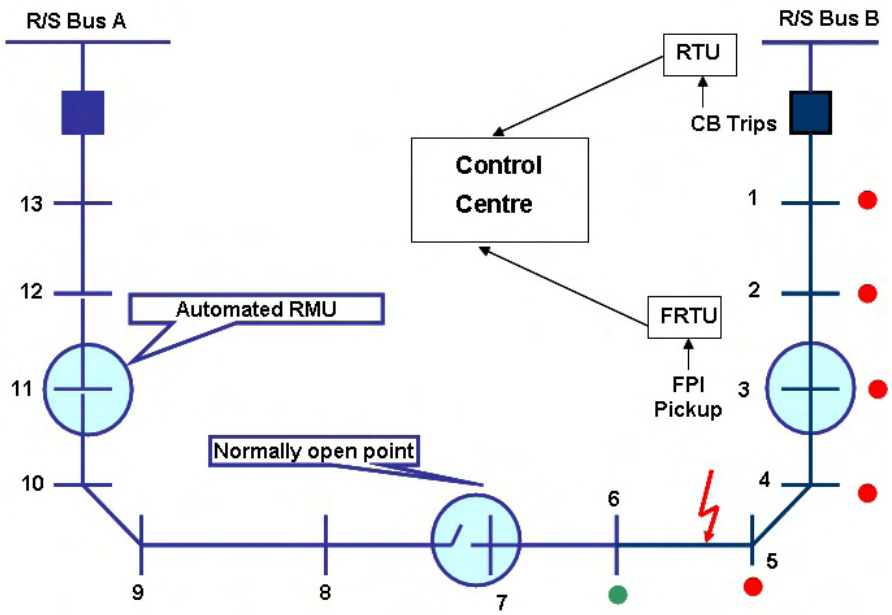

Fig 14

Let us assume fault has occurred at time t = 0. At the Control Centre, FPI status change will be time stamped as 30 msec and Receiving Station breaker status change will be time stamped as 100 msec (ignoring communication and protocol time delays). As per FLISR fault location algorithm, it will look for FPIs that have picked up *after* the breaker at Receiving Station has opened. In this case, since the FPI pick up status will appear earlier in the alarm queue, FLISR gets fooled and fails to identify the proper faulty section. One way to over come the problem is to time delay FPI status change indication to Control Centre by, say a second. FPI pick up time will be still 30 msec but the contact wired for remote indication will change status after 1 second. With this change, FPI pick up status will always appear after breaker trip status in the alarm queue. FLISR fault location algorithm works correctly in this case. When ordering FPI, the vendor shall be informed of this special requirement, i.e., the remote contact for SCADA indication after FPI pickup shall be time delayed by 500 msec to 1 sec.

11.0 Acknowledgement

As part of SCADA – DMS implementation in Mumbai Discom, more than 8000 FPIs have been installed. This article has been based on feedback received from various persons involved in this massive exercise. We acknowledge the contributions of D Guha during conceptualization stage and D C Rao, Bhushan Chaudhary, Indranil Chatterjee and Ashok Kumbla during execution stage.

12.0 Conclusion

Many urban utilities in India are already implementing or planning to implement SCADA – DMS as part of automation. FPIs are being installed at almost all substations. In this article, the central role played by a simple device like FPI in fault location is brought out. Any method that minimizes trial and error approach in fault location will dramatically improve supply restoration time and quality of power supply. Planning engineers as well as field engineers will benefit from various suggestions given in the article for successfully implementing FPI in a very large scale.

13.0 Bibliography

CBCT - Core Balance Current Transformer (Sensor)

FPI - Fault Passage Indicator

DMS - Distribution Management System (for monitoring and control of Ring Main)

DT – Distribution Transformer (11/0.433 kV transformers at substations)

FLISR - Fault Location, Isolation and Supply Restoration (part of DMS functionality)

FRTU - Field Remote terminal Unit (placed in substations where automated RMUs are placed for remote control of RMU)

NOP - Normal Open point (placed in Ring Main to split into two sections)

RMU - Ring Main Unit (consists of isolators for feeder control and breakers for DT control)

RTU - Remote Terminal Unit (placed in Receiving Stations for remote control)

SCADA - Supervisory Control and Data Acquisition System

ieema journal

Stator Earth Fault Protection of Large Generator (95%) – Part I

Dr K Rajamani and Bina Mitra,

Reliance Infrastructure Ltd., MUMBAI

(May 2013, IEEMA Journal, Page 76 to 80)

ieema journal

Stator Earth Fault Protection of Large Generator (95%) - Part I

Dr K Rajamani and Bina Mitra, Reliance Infrastructure Ltd., Mumbai

1.0 Introduction

Generators rated from 3.3 kV to 21 kV are grounded either through high resistance or low resistance to limit the earth fault current. If earth fault current magnitude is high, the core damage at the point of fault in generator will be high. In case of damage to core, repairs cannot be carried out at site. The machine has to be sent back to manufacturer's works for repair resulting in prolonged loss of production. To limit the damage to the core, manufacturers allow only a limited earth fault current. This information is usually provided in 'core damage curves' supplied by manufacturer. A typical core damage curve is shown in Fig 1.

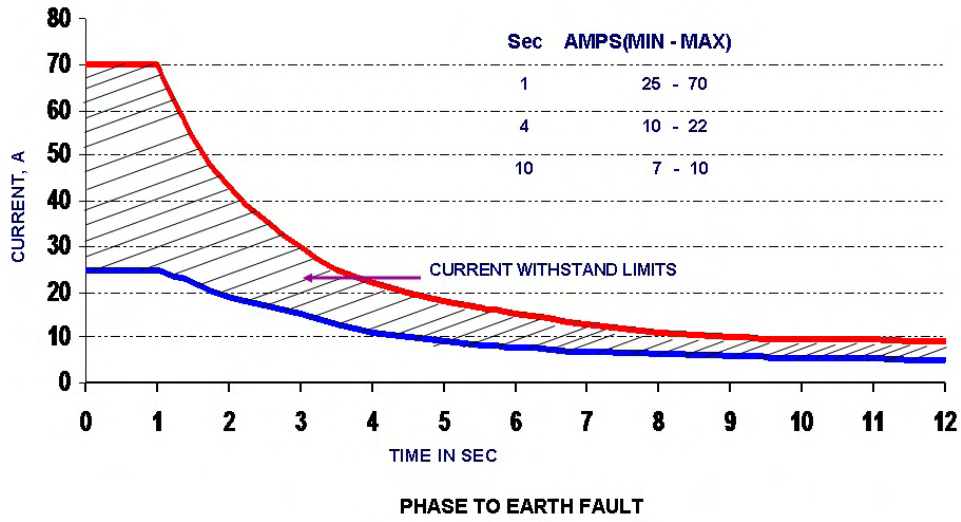

Fig 1 Generator - Core Damage Curve

For example, earth fault current upto 25A is tolerated for 1 sec. The curve is used as a guide while designing the earthing system of generator {i.e. sizing the Neutral Grounding Transformer (NGT), Neutral Grounding Resistor (NGR)} and setting stator earth fault relays in generator protection. Various grounding methods of generator have been dealt in detail in Ref [1].

Part-1 of the article covers in detail NGT sizing and 95% stator earth fault protection. Part-2 of the article will cover 100% stator earth fault protection.

2.0 High Resistance Grounding of a Generator

For the main generator in a power plant high resistance grounded system is provided. Generator neutral grounding uses a NGT with a loading resistor connected in the

May 2013, IEEMA Journal, Page 76 to 80

secondary. The value of NGT and loading resistor (R_L) is selected such that, for an earth fault, current through resistor is slightly greater than total system capacitive current. In High Resistance Grounded system, the earth fault current is limited between 5A to 15A.

Refer figure 2 indicating the capacitances of a generator circuit.

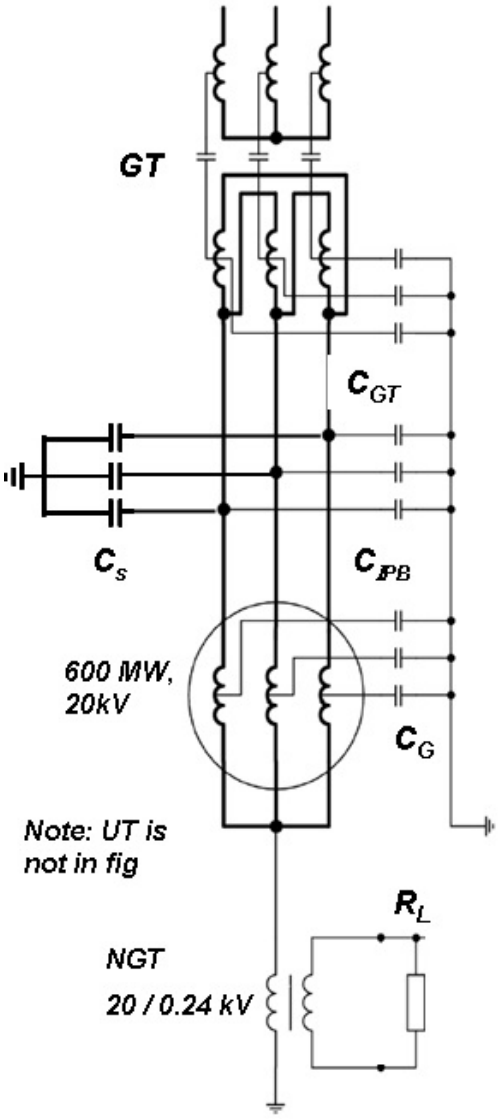

Fig 2 Generator System Capacitance

Fig. 3 indicates flow of charging current under balanced steady state conditions. Under balanced conditions, $I_R + I_Y + I_B = 0$.

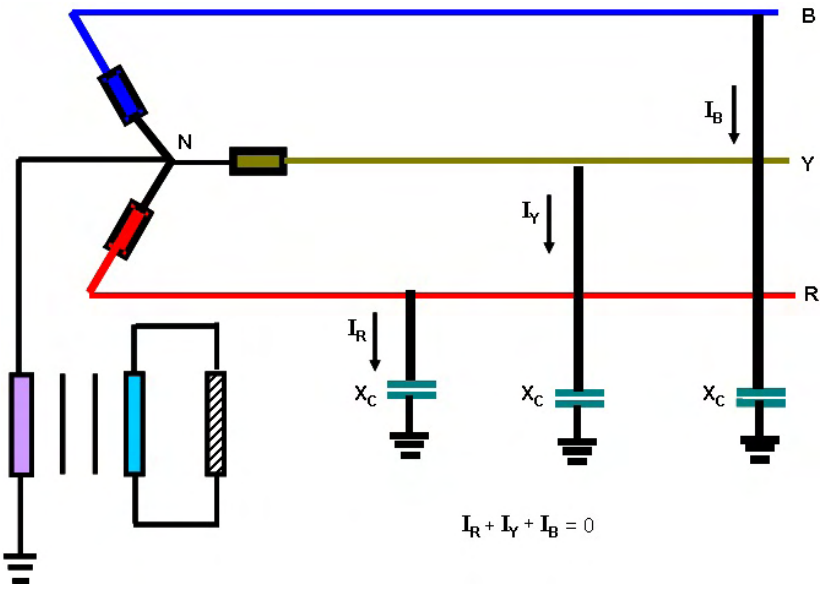

Fig 3 Current Distribution Under Balanced Steady State Conditions

When an earth fault occurs, capacitance of the faulted phase gets shorted. The charging current in the unfaulted phases adds up to flow in the neutral. The voltage of the faulted phase reduces to zero while the voltage of the unfaulted phases rises to line voltage. Refer Fig. 4 and 5 for the earth fault current distribution and vector diagram for the capacitive charging current during earth fault.

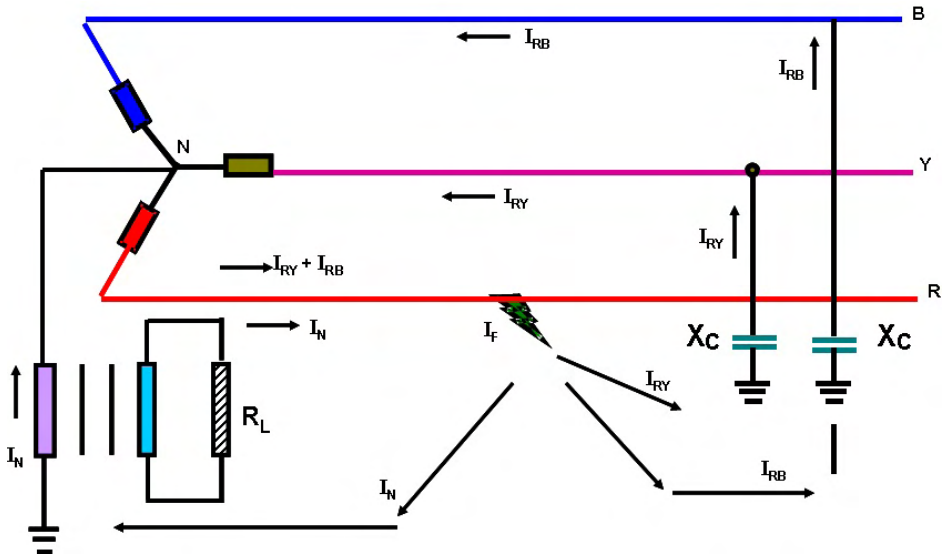

Fig 4 Fault Distribution for Line To Ground Fault

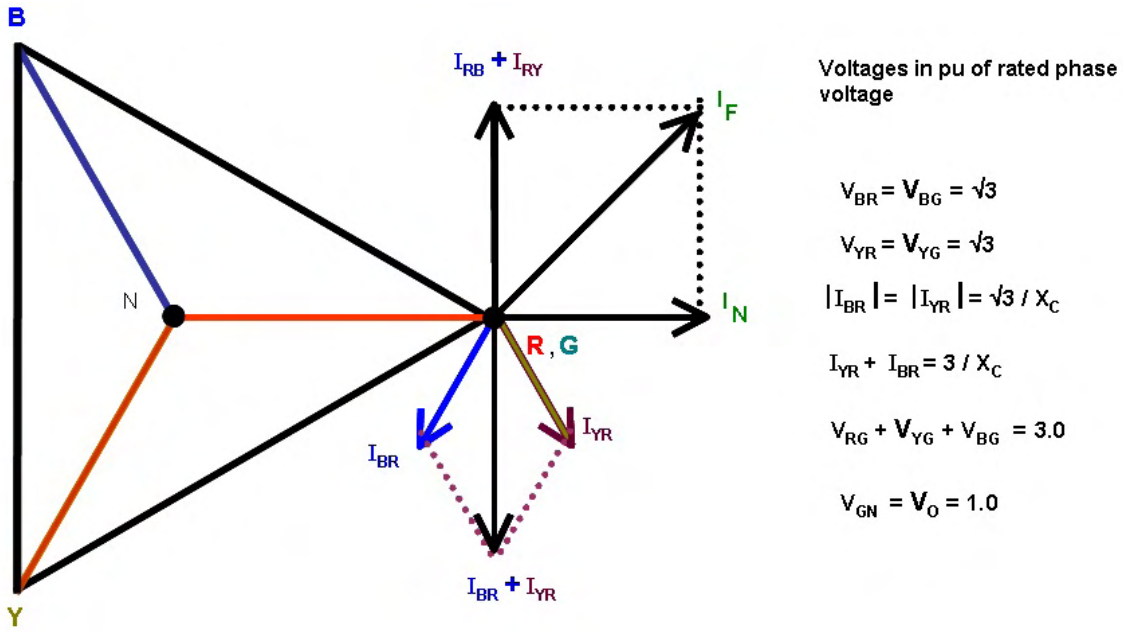

Fig 5 Phasor Diagram

Concept of reflected impedance is used in high resistance grounded system. A small value of resistor on the secondary side of NGT is magnified on primary side of the NGT. This is an economical solution to restrict the earth fault current to a low value without using a large value of resistor.

Eg. ,Consider a 20kV system where the earth fault current has to be restricted to 5A. Without NGT the required value of resistor:

$$R = \frac{\left(20{,}000 / \sqrt{3}\right)}{5}$$

$$= \quad 2309\ \Omega$$

In case a NGT with ratio 20/0.24kV is connected, a small loading resistor would suffice. The required value of loading resistor R_L

$$R_L = \frac{2309\ \Omega}{(20 / 0.24)^2}$$

$$= \quad 0.33\ \Omega$$

Refer Fig. 6 explaining the concept. Therefore NGT of 20/0.24kV with a loading resistor of 0.33 Ω is equivalent to a primary resistor of 2309 Ω to restrict earth fault current to 5A.

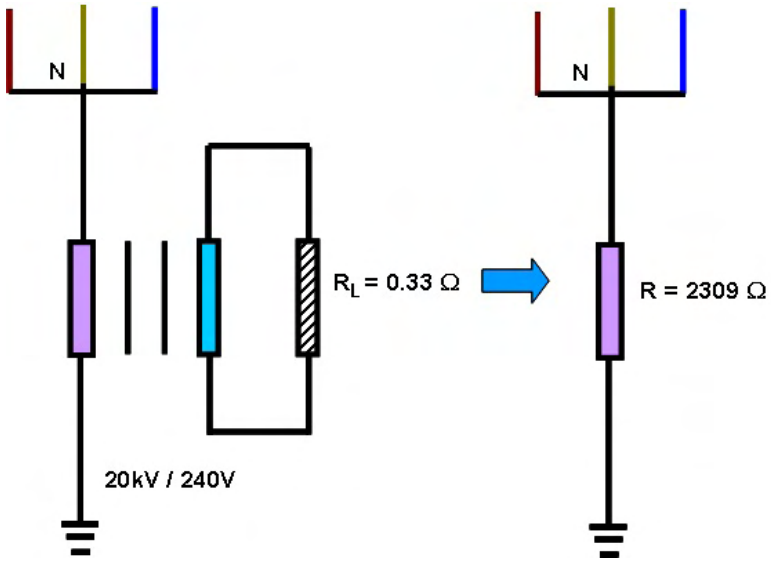

Fig 6 Concept of Reflected Impedance

A typical sizing of the NGT and NGR for a 600MW unit as per CEA guidelines (Basic Electrical Design Features for Thermal Power Station-Section 3) is explained.

2.1 Data

a.	Generator Rated Output		600MW
b.	Generator Rated Voltage, V_{LL}		20kV
c.	Generator Phase Voltage, V_{PH}		11.55kV
d.	Generator System Capacitance, $C = C_G + C_{IPB} + C_{GT} + C_{UT} + C_s$		0.213 + 0.01048 + 0.012 + 0.027 + 0.125 = 0.38748 μF /ph
	d_1	Generator Capacitance, C_G	0.213 μF
	d_2	Iso phase busduct capacitance, C_{IPB}	0.01048 μF
	d_3	Generator Transformer capacitance, C_{GT}	0.012 μF
	d_4	Unit Transformer capacitance, C_{UT}	0.027 μF
	d_5	Surge Capacitor, C_S	0.125 μF

It can be seen that generator winding capacitance and surge capacitance are the dominant factors. In fact surge capacitance value can be as high as 0.25 μF in many

cases. Hence inaccuracies in the value of bus duct or transformer winding capacitances are not of serious concern.

2.2 Calculations

i) *Capacitive Reactance/Phase,* $X_{cg} = \frac{1}{2\pi fC}$

$= 8214.8\ \Omega$

ii) Capacitive charging Current during earth fault, $I_C = \frac{3xVph}{Xcg}$

$= \frac{3\ x11.55\ x10^3}{8214.8}$

$= 4.21\ A$

iii) The primary voltage rating of NGT is selected equal to the line voltage of generator i.e. V_{LL} = 20kV. This is a conservative consideration as neutral to ground voltage for high resistance grounded system during ground fault will be maximum phase voltage-(20kV/√3 = 11.55 kV).

iv) The required NGT rating $= V_{LL}\ x\ I_C$

$= 20\ kV\ x\ 4.21\ A$

$= 84.2\ kVA$

v) As per CEA guidelines, the NGT shall be sized for a 5 minute duty. For a 5 min duty, the overload factor for determining the continuous rating is 2.8. (As per CEA guidelines referred earlier).

Therefore, continuous rating of NGT $= \frac{84.2}{2.8}$

$= 30\ kVA$

The above calculation is extremely conservative. Earth faults will be cleared within 10 secs. As per GEC measurement guide, a factor of 6 for 30 secs duty is adequate.

This will result in a NGT with much less continuous rating.

Continuous rating of NGT $= \frac{84.2}{6}$

$= 14\ kVA$

vi) The loading resistor (R_L) is so selected that the resistive current is slightly greater than capacitive current. It is ensured by using a safety factor of 1.1.

The resistive current , $I_R = 1.1 \times I_C$

$= 1.1 \times 4.21$

$= 4.63\ A$

Required value of resistance, $R'_L = \dfrac{Vph}{I_R}$

$= \dfrac{11.55 \times 10^3}{4.63}$

$= 2493\ \Omega$

vii) Considering NGT ratio as 20 / 0.24kV, the required value of loading resistor, R_L

Loading resistance, $R_L = \dfrac{R'_L}{(20/0.24)^2}$

$= 0.359\ \Omega$

Therefore the value of loading resistor, R_L should be 0.36 Ω.

viii) For a highly oversized design, the selected rating of NGT is 20/0.24kV, 30kVA, 5 min with a loading resistor of 0.36 Ω. For optimum design, the NGT rating of 20/0.24kV, 20kVA, 30 sec with a loading resistor of 0.36 Ω will suffice.

ix) The secondary voltage of NGT should be selected in such a way that the resulting value of loading resistor R_L is not very small. As per recommendations of a leading relay manufacturer (Siemens), the loading resistor should be preferably greater than 0.5 Ω to ensure proper operation of 100% stator earth fault protection with 20Hz voltage injection. For such cases two options are available:

(a) Increased secondary voltage of NGT. 500V can be selected as the secondary voltage of NGT.

(b) Reduced primary voltage for NGT. The neutral to ground voltage during earth fault will be equal to phase voltage of generator. The minimum rating of NGT primary winding can be 1.2 – 1.3 times phase voltage of generator. For the given example the NGT primary voltage can be 14-15kV.

Both options have been applied in author's company. In one project NGT secondary with 500V have been used. In another project NGT with ratio of 15kV/240V was used.

x) A over dimensioning factor is many times considered in NGT sizing to account for field forcing. The implication of field forcing on NGT sizing is discussed in detail in the next section Cl 3.0.

It may be noted the actual fault current will be marginally less than designed earth fault current as the following are ignored in the calculation:

(i) Resistance of NGT secondary and connecting cable to resistor

(ii) Leakage reactance of NGT

3.0 NGT sizing and Exciter field forcing

3.1 When sizing NGT, some design guides recommend over dimensioning factor of 1.3 – 1.4 to account for field forcing. Following discussions critically examine the influence of field forcing on NGT sizing.

3.2 Unlimited forcing is typically for 1 second, to allow excitation to force to ceiling voltage for close in faults that are cleared in primary or backup clearing time.

3.3 There is a timer in the Over Excitation limiter logic (OEL) that allows for unlimited forcing typically for 1 second. After unlimited forcing, the IEEE 50.13 curve is used to compute excess heating in the rotor. At a point when curve indicates that increased field current is not allowable, a field current regulator brings the field current rapidly back to full load rating.

3.4 Line to line voltage of generator PT is connected to AVR. For any line to ground fault on generator side, line voltage is almost unaffected as high resistance grounded system is provided for generator. In this case field forcing will not happen theoretically.

3.5 In majority of cases, field forcing happens only for grid faults. Consider R phase fault on grid (Refer Fig 7). The line voltages on delta side (generator side) reduce significantly (Refer Fig 8). Since the feedback signal to AVR is line voltages, field forcing is initiated immediately. Within 100 msec the fault in EHV system is removed and field voltage / current is correspondingly reduced.

Fig 7 Generator and GT Circuit

3.6 From Fig 8, during grid fault, it can be seen that the neutral voltage is zero. It also follows intuitively from the fact that, a line to ground on star side of transformer is reflected as line to line fault on delta side of transformer (Ref Fig 9).

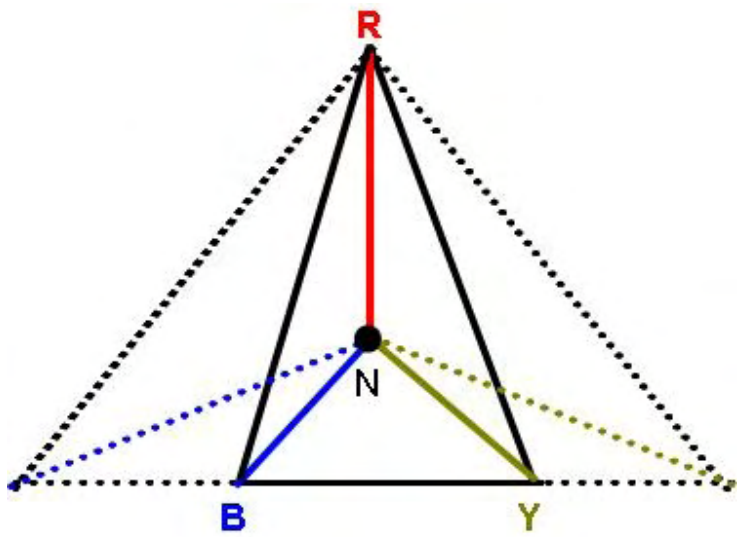

Fig 8 Generator Voltage Phasor for Line to Ground Fault in Grid

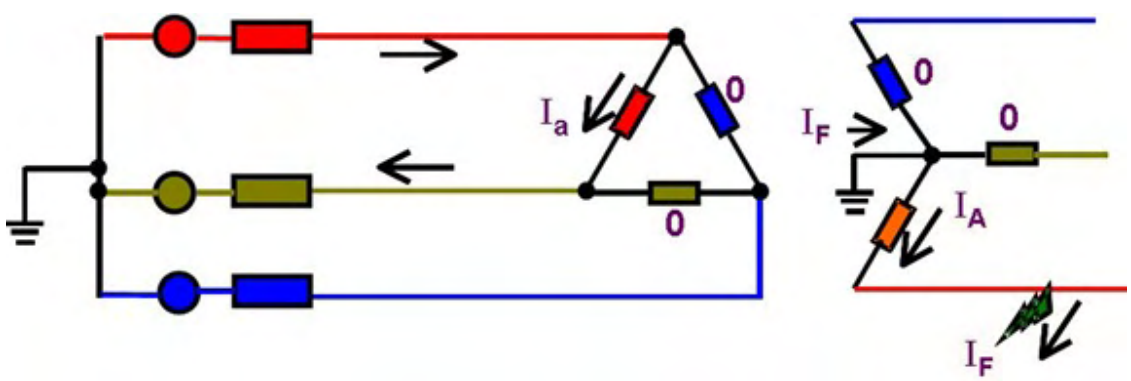

Fig 9 Fault Distribution for Line to Ground Fault

3.7 From the above, following are summarized:

3.7.1 During earth fault on generator side, field forcing will not happen as line voltages on generator side are almost balanced. Stator earth fault protection trips the unit within a second.

3.7.2 During internal phase fault on generator side, differential protection will trip the unit within 100 msec.

3.7.3 Field forcing happens for external ground fault in grid. However the neutral voltage on generator side is nearly zero during external grid faults.

3.7.4 Unlimited field forcing is typically for a maximum of 1 second.

3.7.5 Considering the above, over-dimensioning NGT for field forcing conditions is not required.

4.0 Earth fault protection for Generator

The methods used for earth fault protection for generator windings connected through generator transformer are as follows:

4.1 95% Stator earth fault protection

In this method the displacement voltage during earth fault is measured by a voltage relay. The principle of operation is that during an earth fault the voltage of the faulted phase reduces to zero whereas the voltage between neutral and ground rises to phase voltage. Refer Fig.10 and 11 for the phasor diagrams during balanced condition and line to ground fault respectively.

$V_{RG} = 1 \angle 0$

$V_{YG} = 1 \angle -120$

$V_{BG} = 1 \angle 120$

$V_{RY} = V_{YB} = V_{BR} = \sqrt{3}$

$V_{RG} + V_{YG} + V_{BG}$

$= 3V_{NG} = 3V_O = 0$

$V\Delta = V_{RG} + V_{YG} + V_{BG} = 3V_O = 0$

$V_{NG} = V_O = V\Delta / 3 = 0$

Neutral at ground potential:
No shift

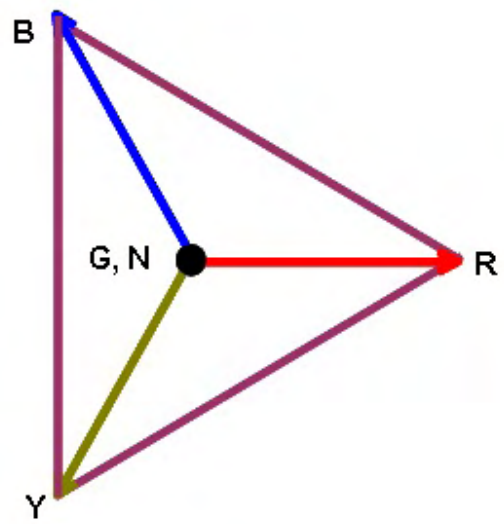

Fig 10 Phasor for Balanced Operating Condition

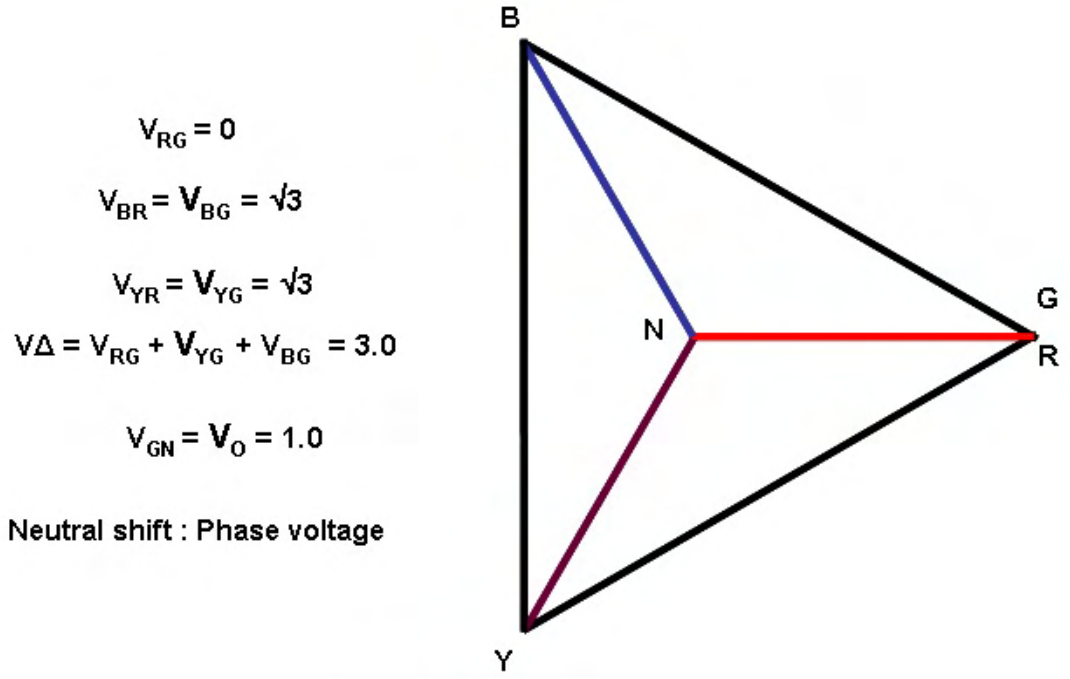

Fig 11 Phasor for Line to Ground Fault

The displacement voltage is either measured across the neutral grounding transformer (Refer Fig 12) or measured across open delta PT at generator terminals (Refer Fig 13). In both cases the displacement voltage detected by the protection relay is of fundamental frequency (50Hz).

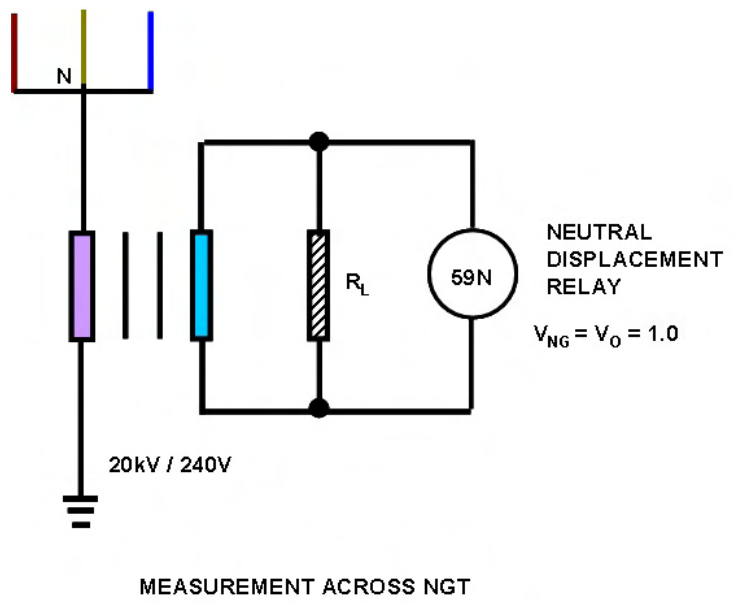

Fig 12 Stator Earth Fault (95%)

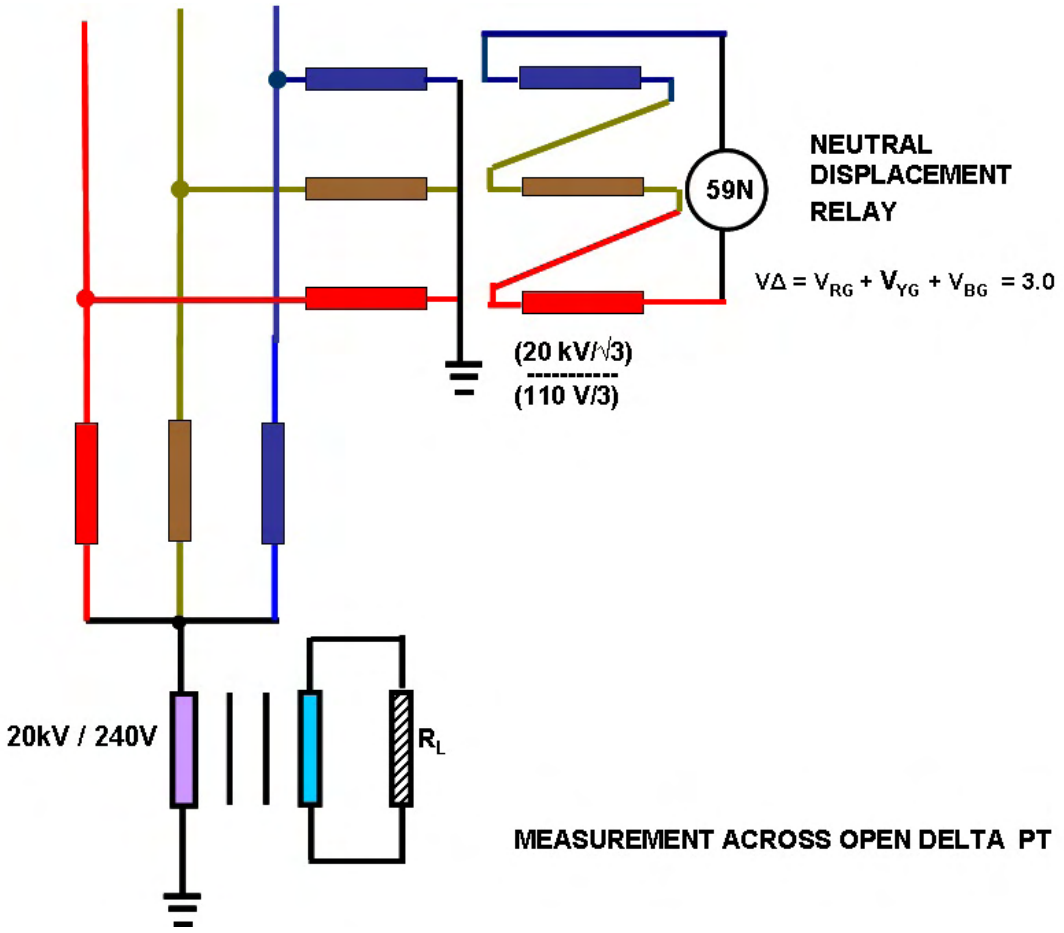

Fig 13 Stator Earth Fault (95%)

When the measurement is done across neutral grounding transformer the relay measures V_{NG} = 1 pu. Eg if the generator rated voltage is 20kV the relay will measure a voltage corresponding to a primary voltage of 20kV / √3. With a NGT ratio of 20/0.24kV, the voltage across relay is 240V / √3 = 138.6V.

When the measurement is done across open delta PT, the relay measures

$\Delta V = 3V_0$ = 3 pu. Eg if the generator voltage rating is 20kV the relay will measure a voltage corresponding to a primary voltage of √3 x 20kV. With a PT ratio of 20kV/√3/ 110V/3, the voltage across relay is 110V.

It may be mentioned here that with numerical relays it is not mandatory to provide open delta PT for detection of displacement voltage. Many of the numerical relays can derive $\Delta V = 3V_0$ from three phase input voltage to the relay.

In both cases typical setting is 10V with 0.3 to 0.5 sec time delay. In some cases, because of arcing faults, relay may pick up and drop off before set time delay and

may again repeatedly pick up and drop off. If this continues it is dangerous for generator as the fault is not cleared till a permanent fault is created. In order to overcome this, reset time delay can be set to 5 secs. The relay will integrate the time pulses during the reset time and reduce the fault clearing time.

With this method of earth fault protection, complete winding of the generator is not protected. For earth faults near to the neutral, the voltage is too low for the relay to pickup (Refer Fig 14). Hence earth faults in winding upto say 95% from terminals only can be detected.

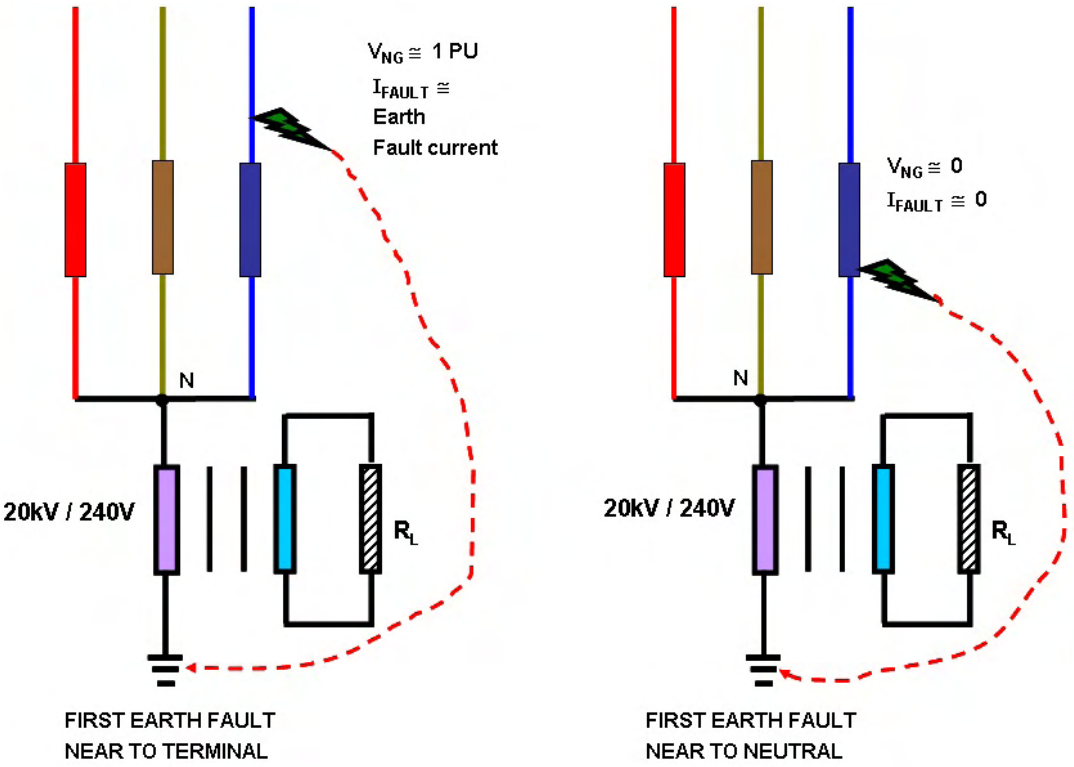

Fig 14 Stator Earth Fault

Eg consider 20/0.24kV, NGT restricting the earth fault current to 5A.

For a terminal fault the voltage developed between neutral and ground will be

V_{NG} =20kV / √3 and current of 5A will flow.

Now consider a fault at 5% from the star point of the generator,

The voltage developed between neutral and ground will be

$$V_{NG} = 0.05 \times \frac{20kV}{\sqrt{3}}$$

$$= 577V$$

and current = 0.05 x 5 A

= 0.25 A will flow.

The secondary voltage will be 7V [= (0.24/20) x 577 V]. This is too low for positive pickup.

4.2 100% Stator earth fault protection

The protections provided for earth fault protection of 100% of winding is discussed in Part-II of the article.

5.0 Acknowledgement

The authors are indebted to Alexander Murdoch, GE Energy, Schenectady for clarifying finer points on field forcing.

6.0 References

[1] "Generator neutral grounding practices", Dr K Rajamani and Bina Mitra, IEEMA Journal, August 2007, pp 89 – 97.

ieema journal

Stator Earth Fault Protection of Large Generator (100%) – Part II

Dr K Rajamani and Bina Mitra,

Reliance Infrastructure Ltd., MUMBAI

(May 2013, IEEMA Journal, Page 81 to 86)

Stator Earth Fault Protection of Large Generator (100%) - Part II

Dr K Rajamani and Bina Mitra, Reliance Infrastructure Ltd.,Mumbai

1.0 Introduction

As seen in the earlier article [1], "Stator Earth Fault Protection of large generator (95%) - Part I", faults very near to the neutral remain undetected by 95% Stator earth fault protection. However it is very important to detect first earth fault near to the neutral as the generator is solidly grounded during second earth fault. NGT gets bypassed and current of the order of kA will flow in case of second earth fault. (Refer Fig. 1). 100% stator earth fault protection (SEF) is provided to detect earth faults very close to the neutral. There are two methods of detection. Both these method do not measure fundamental frequency (50Hz) voltage.

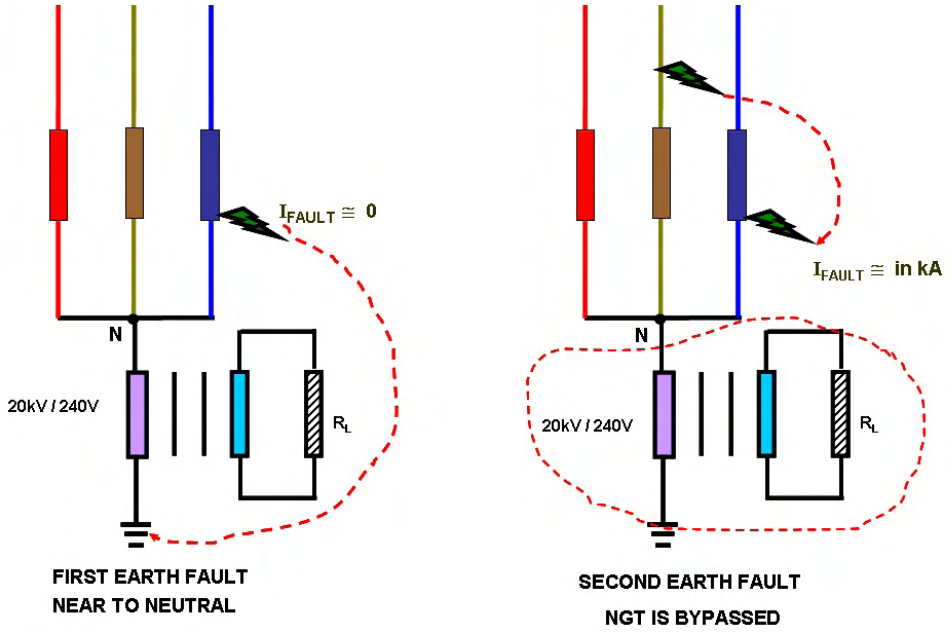

Fig 1 Stator Earth Fault

2.0 100% Stator earth fault with third harmonic measurement

The basis of this protection is that all alternators generate certain amount of third harmonic (150Hz) voltages. Depending on pitch factor, magnitude of third harmonic voltage generated varies. Under healthy conditions third harmonic voltages are present near to the neutral and terminal. Typically the magnitude of third harmonic voltage is 1% to 3% of generator phase voltage. The third harmonic voltages at terminals and neutral vary considerably with load. The third harmonic voltage at maximum load is approximately two times the magnitude at minimum load. When earth fault occurs near to the neutral, third harmonic

May 2013, IEEMA Journal, Page 81 to 86

voltages reduces near to the neutral and increases towards terminals. Refer Fig.2.

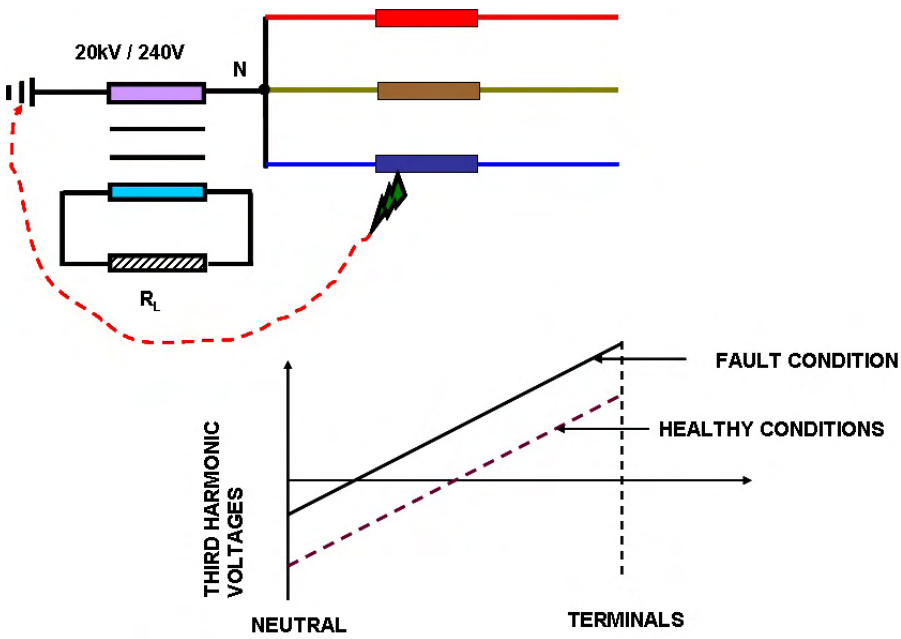

Fig 2 Third Harmonic Voltages for Fault Condition

Depending on the point of measurement of third harmonic voltage either drop in third harmonic voltage or increase in third harmonic voltage is considered for trip decision. If third harmonic voltage is measured across NGT then drop in third harmonic voltage is considered for a trip decision. When third harmonic voltage is measured at generator terminals with an open delta PT, rise is third harmonic voltage is used for detection. Refer Fig 3. Since generation of third harmonics varies with generator loading conditions, trip is supervised either by power or current or voltage element.

Some generator OEMs use 'V' connected PTs at generator terminals. 'V' connected PTs essentially measure line voltages. For such cases third harmonic measurement is done across NGT.

The above technique of identifying ground faults near neutral by measuring third harmonic voltage is now improved by a more robust technique involving 20HZ voltage injection.

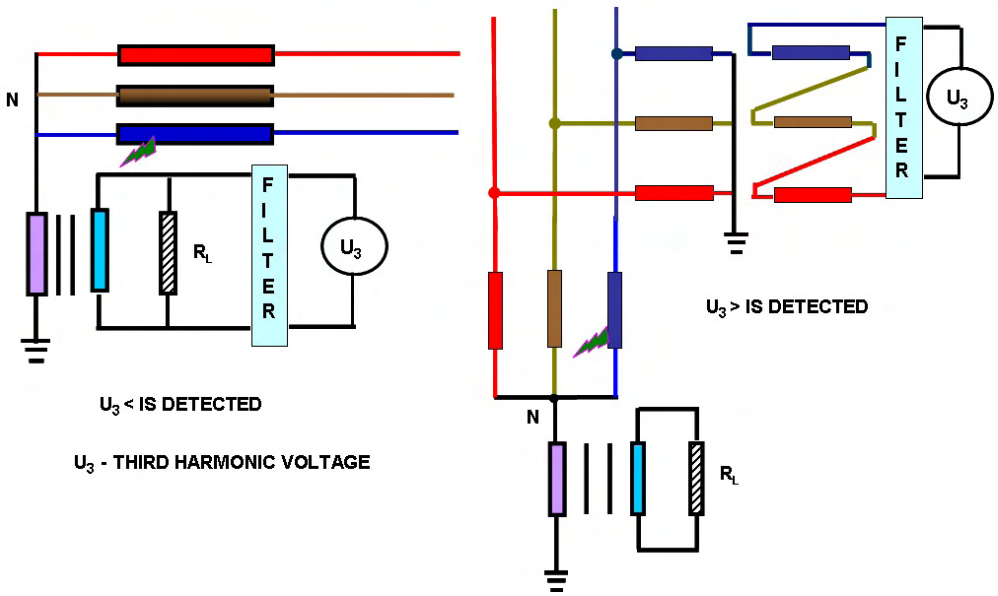

Fig 3 Stator Earth Fault (100%)

3.0 100% Stator earth fault detection with 20Hz Voltage Injection

This method is independent of fundamental frequency (50Hz) displacement voltage appearing during earth faults, and detects earth faults in complete winding including the machine star point. This method can also detect earth faults at the generator terminals, including connected components such as voltage transformers. The measuring principle used is not influenced by the generator operating mode and allows measurements even with generator at standstill. The following two measuring principles allow implementation of reliable stator earth fault protection for the complete generator winding.

(i) Measurement of fundamental frequency (50Hz) displacement voltage (by 95% stator earth fault protection) covered in Part I of the article [1].

(ii) Evaluation of the measured quantities at an injected 20Hz voltage (100% stator earth fault protection).

The basic principle of 100% SEF protection is shown in Fig 4. An external low frequency (20Hz) alternating voltage source injects into the generator star point a voltage of maximum 1% of the rated generator voltage. If an earth fault occurs near the generator star point, the 20Hz voltage drives a current through the fault resistance. From the driving voltage and the fault current, the protective relay determines the fault resistance.

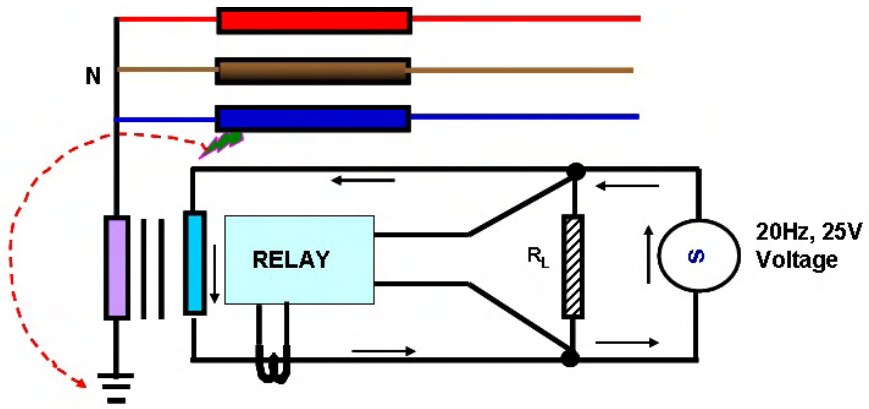

Fig 4 Stator Earth Fault (100%) with 20Hz Voltage Injection

The protection function setup needs a 20Hz generator and a band pass filter. The 20Hz generator produces a square-wave voltage with amplitude of approximately 25 V. This square-wave voltage is fed via a bandpass into the loading resistor (R_L) of the neutral grounding transformer. The 20Hz resistance of the bandpass (R_{BP}) is approximately 8 Ω. If the load resistor carries the full displacement voltage during a terminal-to-earth fault, the series resistance of the bandpass protects the 20Hz generator from high currents. Refer Fig. 5 and 6 for the setup. The 20Hz voltage is measured directly at the loading resistor without voltage divider (Refer Fig.5) or with a voltage divider (Refer Fig.6). The secondary voltage rating of the NGT and the rating of the voltage input of the relay governs the use of voltage divider. E.g., if a 20/0.5kV NGT is used with a relay of voltage rating of 200V, then 5:2 voltage divider should be used.

In addition, 20Hz current is measured using a CT. Both 20Hz voltage and current are fed to the protection device. From the two measured quantities U_{SEF} and I_{SEF}, the fault resistance is determined. The protection function has an alarm stage and a tripping stage. Both stages can be delayed with a timer. The protection function is blocked between 10 Hz and 40 Hz. The protection function is active for frequencies below 10 Hz (i.e. at near standstill) and above 40 Hz.

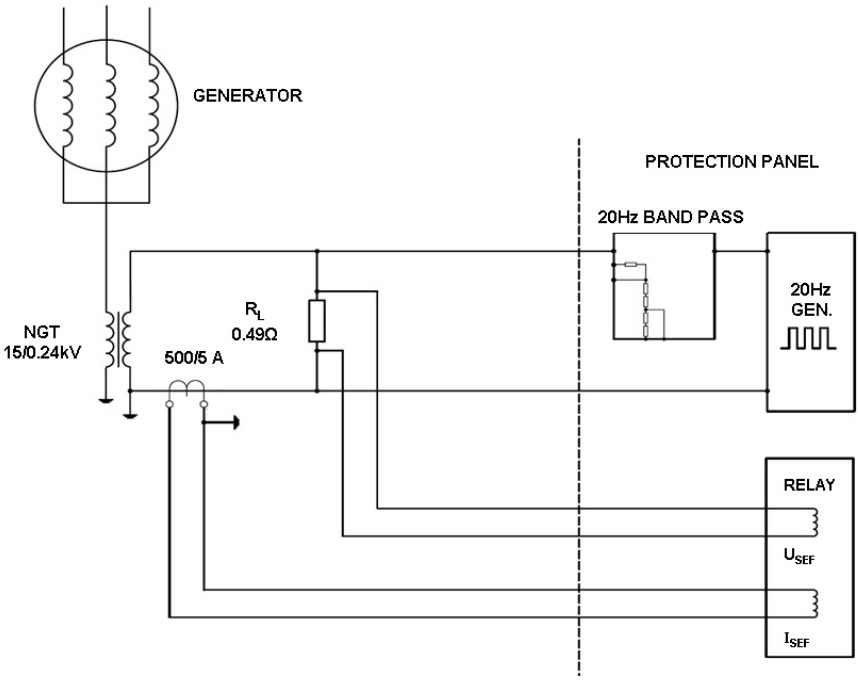

Fig 5 Setup for 100% Stator Earth Fault with 20Hz Voltage Injection (Without Voltage Divider Circuit)

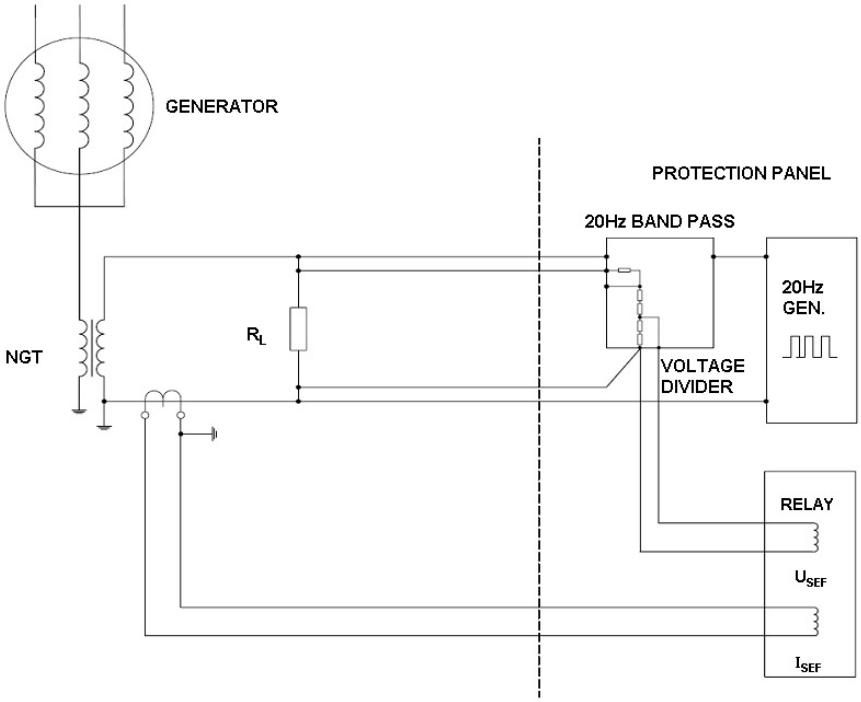

Fig 6 Setup for 100% Stator Earth Fault with 20Hz Voltage Injection (With Voltage Divider Circuit)

The voltage measured by the relay, U_{SEF}, is given by (Refer Figs 5 and 6),

$$U_{SEF} = \frac{R_L}{(R_L + R_{BP} + R_{Cable})} x \frac{U_{20Hz}}{U_{Divider}}$$

When voltage divider is not connected $U_{Divider}$ = 1

For evaluation of loading resistor R_L refer Part 1 of the article.

Consider, R_L = 0.5 Ω; U_{20Hz} = 25 V;

$U_{Divider}$ = 1; R_{BP} = 8 Ω;

R_{Cable} = 3.5 Ω *(Considering to and fro length of 400m of 2.5 sq. mm cable (8.87 Ω/km))*

$$U_{SEF} = \frac{0.5}{(0.5+8+3.5)} x25$$

$$= 1\ V$$

When the voltage to be measured is tapped from 20Hz injection point, voltage measured by the relay (Refer Fig.7)

$$U_{SEF} = \frac{R_L + R_{Cable}}{(R_L + R_{BP} + R_{Cable})} x \frac{U_{20Hz}}{U_{Divider}}$$

$R_{Cable} > R_L$, so the voltage measured by the relay in Fig. 7 will be much different from the actual voltage across R_L. This will lead to significant measurement errors. Therefore, the measuring input of the relay should be connected directly across R_L. (Refer Fig.5). Hence it is recommended to use two separate cables, one between protection panel and NGT for injection and another cable between protection relay and load resistor for measurement. This reduces measurement errors.

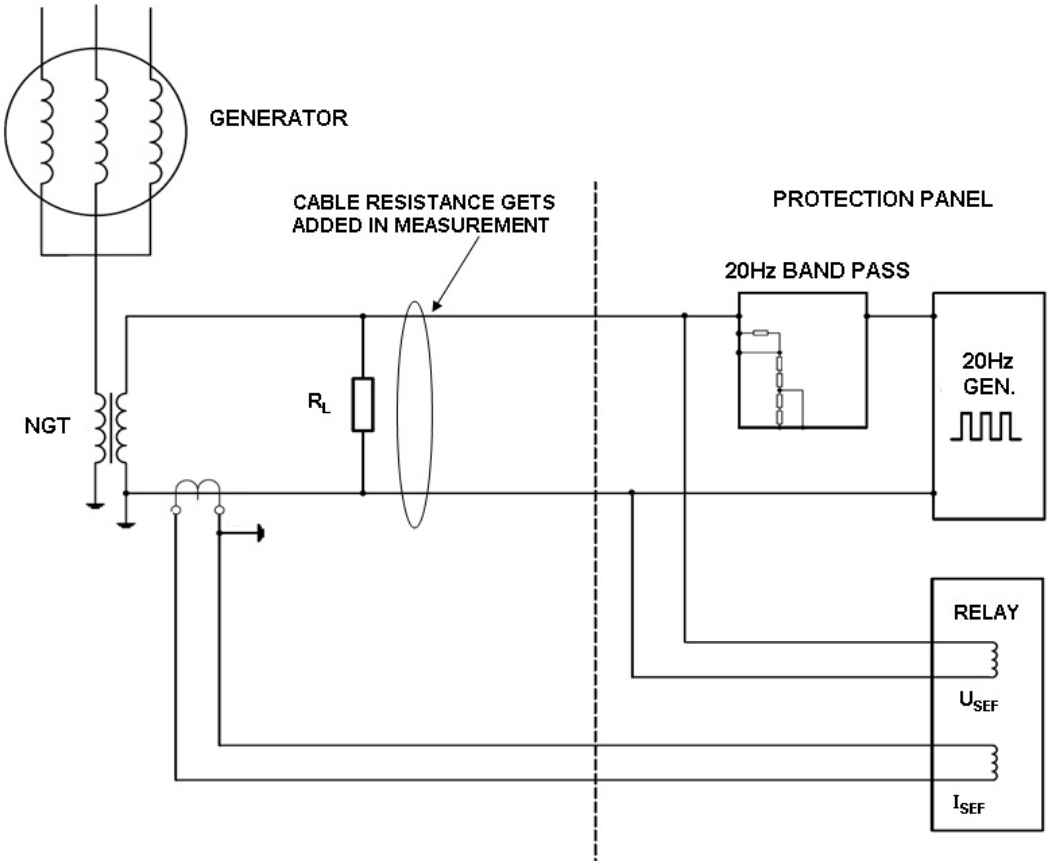

Fig 7 Incorrect Method of Connection

4.0 Protection settings

A case of 300MW unit with Siemens make generator protection relay (7UM622) is used [2] for illustrating the concepts in settings. Refer Fig. 5.

i) Data

Sr. No.	Parameter	Value
1.	Generator Rated Voltage	20 kV
2.	NGT Ratio , U_{Transf}	15000/240V = 62.5
3.	CT Ratio, U_{MinCT}	500/5 A = 100
4.	Divider ratio, $U_{Divider}$	1/1 = 1
5.	R_{LOAD}	0.49 Ω
6.	X_{cg} (Capacitive reactance/ph)	6270 Ω

ii) Setting for the resistance measurement stage

For this stage following parameters are to be set

Sr. No.	Parameter	Parameter Description
1.	R< SEF ALARM	Pickup Value of Alarm Stage
2.	R<< SEF TRIP	Pickup Value of Tripping Stage
3.	T SEF ALARM	Time Delay of Alarm Stage
4.	T SEF TRIP	Time Delay of Tripping Stage
5.	FACTOR R SEF	Accounts for the NGT, divider and CT ratio

a) $$FACTOR\ R\ SEF = \left(U_{Transf}\right)^2 x \frac{U_{Divider}}{U_{MinCT}}$$

$$= 62.5^2 x \frac{1}{100}$$

$$= 39$$

The primary fault resistance is usually set between 1 and 2 kΩ for the trip stage and between 3 and 8 kΩ for the alarm stage.

Choosing 1 kΩ for trip stage and 5 kΩ for alarm stage, the secondary values for alarm and trip stages are:

b) *R< SEF ALARM (primary)* = *5000 Ω*

R< SEF ALARM (secondary) $$= \frac{R < SEF\ ALARM(primary)}{FACTOR\ R\ SEF}$$

$$= \frac{5000}{39}$$

$$= 128\ \Omega$$

c) *R<< SEF TRIP (primary)* = *1000 Ω*

R<< SEFTRIP (secondary) $$= \frac{R << SEF\ TRIP(primary)}{FACTOR\ R\ SEF}$$

$$= \frac{1000}{39}$$

$$= 26\ \Omega$$

d) T SEF ALARM = 10 sec

e) T SEF TRIP = 2 sec

iii) Setting for the current stage

Additionally, a current stage is provided which takes into account *all frequency components*. The current function has only tripping stage. In case resistance measurement stage is blocked, the current stage remains active. The current stage is active over the entire range of generator operation i.e., from standstill to full load operation.

The current stage is used as a backup stage and covers approx. 80 to 90 % of the winding.

Parameter SEF I>> threshold is set at 10%

$$SEF\ I>> \ = \ 0.1\ x \frac{U_{NSEC}}{R_{LOAD}} x \frac{1}{U_{MinCT}}$$

$$= 0.1 x \frac{(20000 / \sqrt{3})}{62.5 x 0.49} x \frac{1}{100}$$

$$= \ 0.37\ A$$

Time delay for current trip stage is same as that for resistance trip stage (T SEF TRIP).

iv) Setting for the monitoring stage

A 20Hz monitoring circuit is provided. It detects failure of 20Hz generator or of the 20Hz connection by evaluating 20Hz voltage and the 20Hz current fed to the relay.

Once the 20Hz generator is switched on, the 20Hz voltage measured by the relay should be nearly the following:

$$U_{SEF} = \frac{R_L}{(R_L + R_{BP} + R_{Cable})} x \frac{U_{20Hz}}{U_{Divider}}$$

R_L = 0.49 Ω; U_{20Hz} = 25 V;

$U_{Divider}$ = 1; R_{BP} = 8 Ω; R_{cable} = 3.5 Ω

$$U_{SEF} = \frac{0.49}{(0.49 + 8 + 3.5)} x\ 25\ V$$

$$= \ 1\ V \qquad \text{.....(1)}$$

The 20Hz current seen by the relay is

$$I_{SEF} = \frac{3 x U_{SEF}}{X_{CG(SEC)}} \ x \frac{1}{U_{MinCT}}$$

For the unit in the given example, per phase capacitive reactance to ground

X_{cg} = 6270 Ω;

Capacitive reactance on NGT secondary,

$$X_{CG(SEC)} = \frac{X_{CG}}{(U_{Transf})^2}$$

$$= \frac{6270}{62.5^2}$$

$$= 1.6\ \Omega;$$

$$I_{SEF} = \frac{3xU_{SEF}}{X_{CG(SEC)}}\ x\frac{1}{U_{MinCT}} = 19\ mA \qquad \text{.....(2)}$$

The monitoring thresholds are set with U20 MIN and I20 MIN. These thresholds are set approximately 50% of the values calculated in (1) and (2) above. The settings selected for U20 MIN = 0.5 V and I20 MIN = 10 mA.

If the 20Hz voltage drops below 0.5 V with drop in 20Hz current below 10mA, then a problem with 20Hz connection is detected.

v) Setting for Correction Angle, Transfer Resistance

The parameters PHI I SEF and SEF Rps are left to zero to start with. The correct setting for these parameters can only be determined during commissioning. The commissioning procedure is discussed below. The parameter RI-PARALLEL allows additional loading resistance to be set (very rare in practice unless made a blunder initially in NGT and loading resistor sizing – refer Part 1 of article). Since no additional loading resistance is provided the setting of ∞ is selected.

vi) Summary of settings

Sr. No.	Parameter	Parameter Description	Parameter value
1.	R< SEF ALARM	Pickup Value of Alarm Stage	5000 Ω (Primary) 128 Ω (Secondary)
2.	R<< SEF TRIP	Pickup Value of Tripping Stage	1000 Ω (Primary) 26 Ω (Secondary)
3.	T SEF ALARM	Time Delay of Alarm Stage	10 secs
4.	T SEF TRIP	Time Delay of Tripping Stage	2 secs
5.	FACTOR R SEF	Accounts for the NGT, divider and CT ratio	39
6.	SEF I>>	Current stage threshold	0.37A
7.	U20 MIN	Supervision threshold for 20Hz Voltage	0.5 V

Sr. No.	Parameter	Parameter Description	Parameter value
8.	I20 MIN	Supervision threshold for 20Hz current	10 mA
9.	PHI I SEF	Correction Angle	0 °
10.	SEF Rps	Resistance Rps	0.0 Ω
11.	RI-PARALLEL	Parallel load resistance	∞ Ω

5.0 Commissioning 100% Stator Earth Fault Protection

5.1 The 100-% stator earth fault protection can be checked with the machine at standstill, because the operating principle is independent of whether the machine is at standstill, rotating or excited. A prerequisite is that the 20Hz generator must be supplied with auxiliary voltage.

5.2 As seen above in the settings, for the following parameters default settings must be maintained during first commissioning.

PHI I SEF = 0 °

SEF Rps = 0.0 Ω

5.3 The measured quantities U_{SEF} and I_{SEF} fed to the device can now be read out

"U SEF=" xx.x V

"U20=" xx.x V

"ISEF=" xx.x mA

"I20=" xx.x mA

U_{SEF} and I_{SEF} are pure rms values corresponding to the 20Hz quantities (U20 and I20) only if the generator is at standstill.

5.4 The U_{SEF} voltage measured is influenced by the loading resistor R_L, the 20Hz resistance of bandpass (R_{BP} approximately 8 Ω), the voltage divider ($U_{Divider}$, either 1 or typically 5/2) and the 20Hz supply voltage (U_{20Hz} - approximately 25 V). The current I_{SEF} is determined by the stator capacitance to earth. Refer CI 4.0 (iv).

5.5 The device calculates from these values the secondary earth resistance. The primary earth resistance is obtained by multiplying the secondary value with **FACTOR R SEF**. Both resistance values, including the phase angle between the 20Hz voltage and the 20Hz current can be read out in the relay.

Typical read out from one of the sites is given below:

Sr. No	Description	Readings
1	R SEF p	9999 k Ω
2	R SEF	9999 Ω
3	Φ SEF	--93°

5.6 Under fault-free conditions the measured current must be negative due to the capacitive current. If it is not, the CT connection should be reversed. The phase angle "Φ SEF=" should be nearly –90° due to the capacitances on stator side. If it is not, the value to complement it to –90° must be determined. For a display value of e.g. "Φ SEF=" -93°, **PHI I SEF** (Correction angle) = 3° is set. This will change the measured value to approx. –90°.

5.7 The value displayed in fault-free condition for **R SEF** must be the maximum possible value of 9999 Ω. The maximum value for the primary earth resistance **R SEFp** depends on the selected **FACTOR R SEF**.

5.8 A short-circuit is created in the generator star point with the test resistor set at zero resistance. Refer Fig 8 for test set up. The measured fault resistance is read out from the relay. This resistance is set as **SEF Rps** (Resistance Rps).

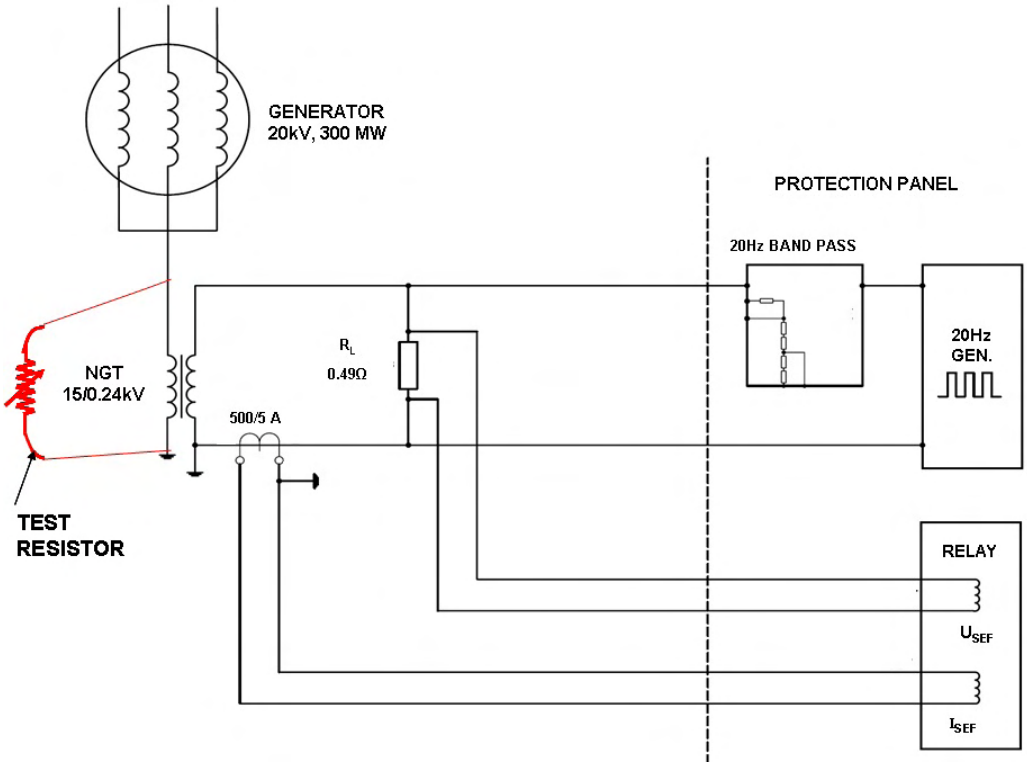

Fig 8 Test Setup for 100% Stator Earth Fault with 20hz Voltage Injection

5.9 Vary the primary side resistance corresponding to the trip value (e.g. 1 kΩ). Check the measured fault resistance displayed in the relay. If this resistance differs very much from the value expected, modify **SEF Rps** accordingly and, if necessary, make a fine adjustment with the correction angle (**PHI I SEF**). Read out finally the fault resistance, and set this value as the tripping threshold **R<< SEF TRIP**. The protection trip is issued after **T SEF TRIP**.

5.10 Next, increase the primary side resistance to the alarm value (e.g. 5 kΩ). Check the measured fault resistance displayed in the relay. This value is set as **R< SEF ALARM**. After the delay time **T SEF ALARM**, the stator earth fault protection issues an alarm "SEF100 Alarm".

5.11 Switch off the voltage supply for the 20Hz generator. The indication "SEF100 Failure" will appear. This ensures that a failure of the 20Hz generator is reliably detected. If this indication occurs with the 20Hz generator in operation, the monitoring threshold **U20 MIN or I20 MIN** should be reduced.

5.12 Remove the test resistor after the test.

5.13 Typical test values are given below

Test Res (kΩ)	R sef PRI (kΩ)	R sef SEC (Ω)	Usef in V	Isef in mA	REMARKS
Open	9999	9999	1.2	7.2	---
Short	0.29	7	0.1	23.6	TRIP
1	1.03	26	0.5	16.1	TRIP
5	4.94	126	0.9	8.5	ALARM

6.0 Caution

At generator standstill condition, significant voltage will be present due to external 20Hz voltage injection. For example, when 25V, 20Hz is injected at the secondary of 20/0.24kV NGT with R_L = 0.36 Ω, ignoring connecting cable resistance,

Voltage across NGT secondary is U $= \frac{R_L}{R_L + R_{BP}} x U_{20Hz}$

$$= \frac{0.36}{0.36 + 8} x 25\,V$$

$$= 1\,V$$

Refer Fig.9.

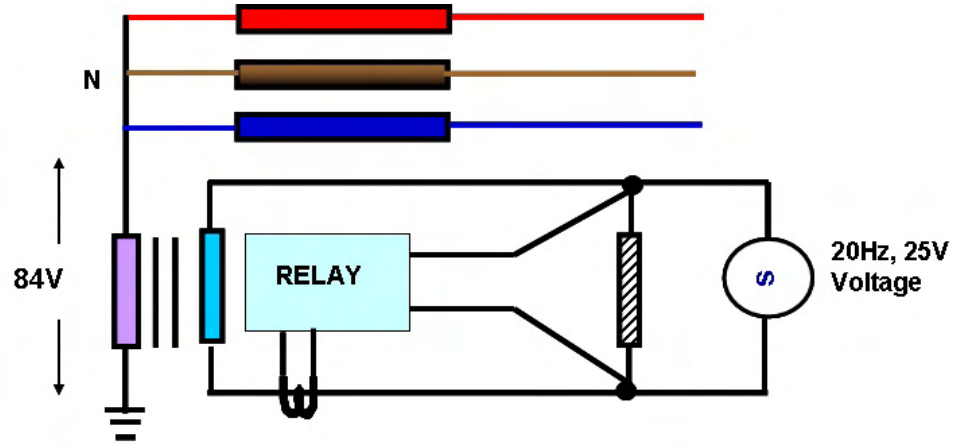

Fig 9 Stator Earth Fault (100%) with 20Hz Voltage Injection

NGT primary side voltage = NGT ratio x NGT secondary voltage

$$= \left(\frac{20}{0.24}\right) x1\,V$$

$$= 84\ V.$$

If loading resistor (R_L) value is 0.5 Ω, the above value will be 123V.

Therefore external 20Hz generator must be disconnected before working on the generator at standstill. While commissioning 100% stator earth fault scheme accessibility of personnel should be restricted near working area.

7.0 CBIP Recommendations

As per CBIP Manual [3] 100% Stator earth fault protection shall be provided for machines rated 100 MVA and above. For machines rated 200MVA and above, 20Hz voltage injection method is recommended.

8.0 References

[1] "Stator Earth Fault Protection of large generator (95%) - Part I", Dr K Rajamani and Bina Mitra, IEEMA Journal, May 2013, pp 76-80.

[2] Siemens Relay Manual for Multifunctional Machine Protection 7UM62.

[3] CBIP Manual on Protection of Generators, Generator Transformers and 220kV and 400kV Networks, (Publication No. 274, Cl 2.1.6.2), Nov 1999.

ieema journal

Electrical Protection of Transformers in Large Power Plant

Dr K Rajamani and Bina Mitra,

Reliance Infrastructure Ltd., MUMBAI

(June 2013, IEEMA Journal, Page 84 to 89)

Electrical Protection of Transformers in Large Power Plant

Dr K Rajamani and Bina Mitra, Reliance Infrastructure Ltd., Mumbai

1.0 Introduction

A typical power plant is equipped with following power transformers:

i) Generator Transformer (GT)

ii) Station Transformer (ST)

iii) Unit Transformer (UT)

Generator transformer evacuates the generated power. In a plant with Generator circuit breaker (GCB), GT can also be used to feed the auxiliaries via Unit transformer. Refer Fig.1. Unit Transformer feeds the unit auxiliary loads and Station Transformer feeds the station auxiliary loads. In a plant without GCB Station Transformer draws power from the grid to provide startup power.

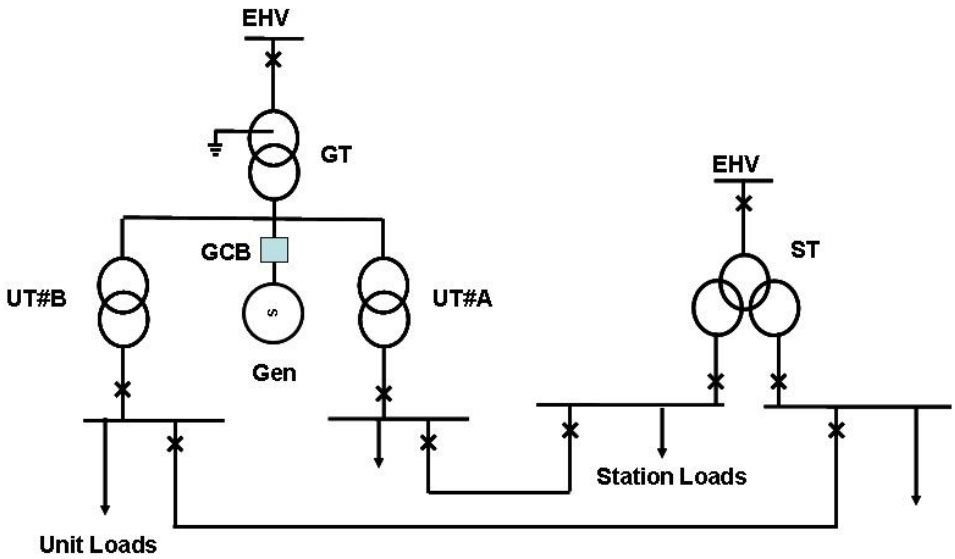

Fig 1 Single Line Diagram of Auxiliary System in Power Plant with Generator circuit Breaker

This article discusses the protection philosophy for the above transformers. It excludes interconnecting transformer (ICT), HV and LV Auxiliary transformers.

2.0 Transformer Protections

The protections provided for the power transformers are detailed below:

2.1 Protection of Generator Transformer (GT)

2.1.1 Electrical protections

2.1.1.1 GT differential protection (87GT)

i) In case of three phase units, GT differential typically covers the overhead

section of the switchyard in addition to the transformer. Refer Fig.2.

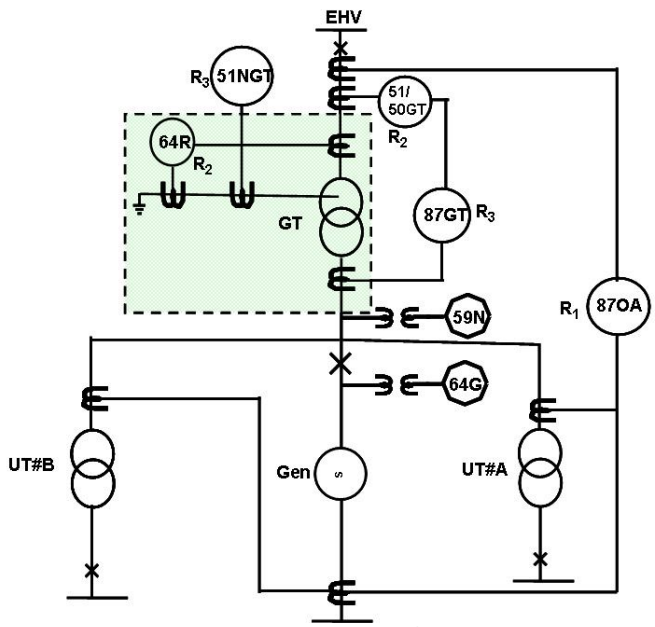

Fig 2 Three Phase GT Protection

ii) For a bank of single phase transformer, the GT differential generally covers only the transformer. A separate differential protection (87L) covering the HV winding and overhead section is also provided for bank of single phase transformer. Refer Fig. 3.

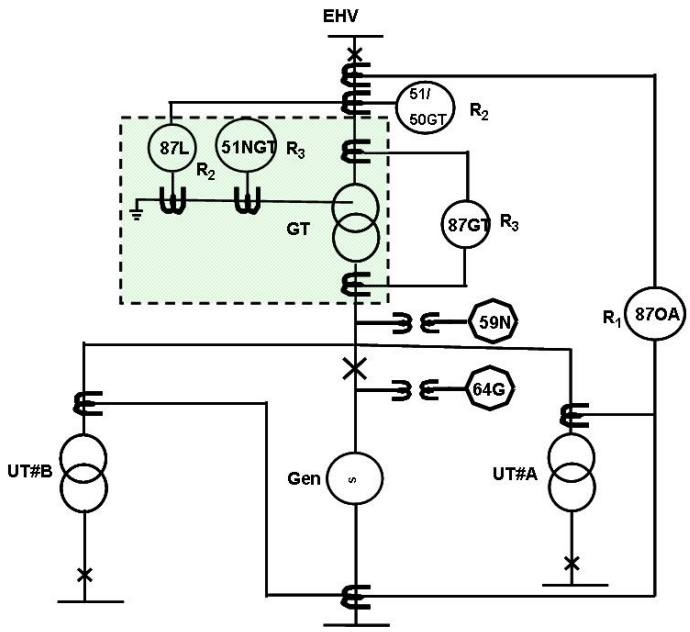

Fig 3 Bank of Single Phase GT Protection

iii) It may be noted that CTs shown in shaded area in Fig 2 and Fig 3 are bushing CTs.

2.1.1.2 i) For a bank of single phase transformers, differential protection is shown in Fig 4.

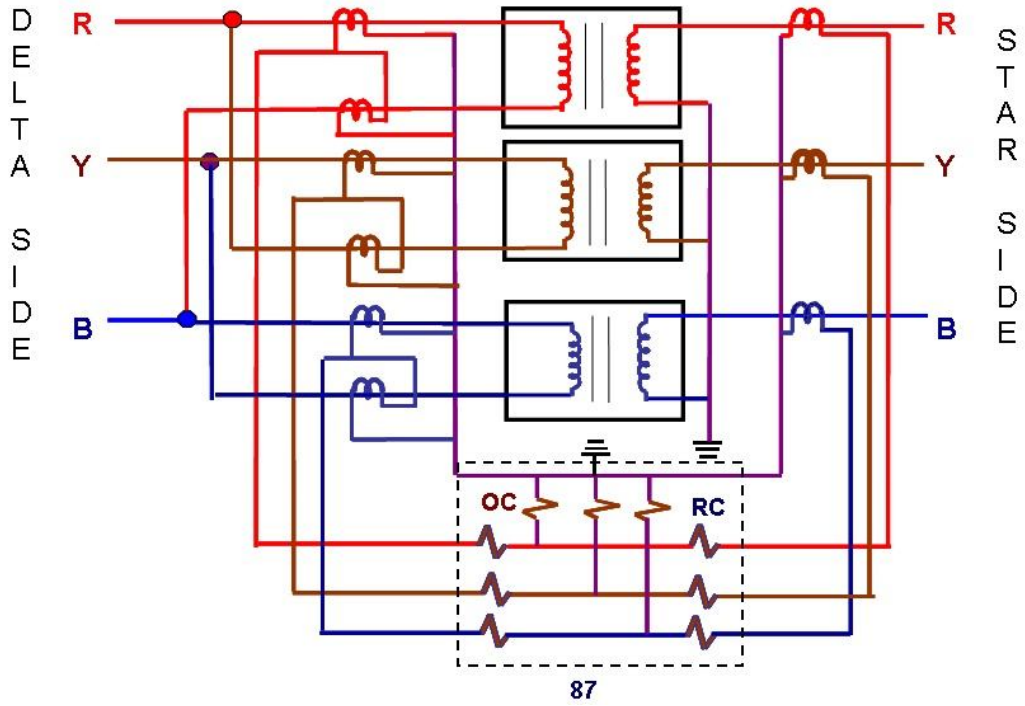

Fig 4 Conventional Differential Scheme for Single phase transformer bank

ii) Two CTs, on either side of LV windings are provided, intrinsically to cover ground faults in the delta winding. [Ref (1)]. This scheme is built on the premise that sufficient current will flow on occurrence of earth fault.

iii) However in a power plant, high resistance grounding is provided for generator neutral. The earth fault current on the delta side of GT is limited within 10A.

iv) The differential protection of generator transformer cannot sense the ground fault in the delta winding. It can be sensed only by voltage based earth fault sensing scheme provided on generator terminals. (59N and 64G in Fig.2 and Fig.3)

v) In view of the above, provision of one CT on delta winding is sufficient. Refer Fig.5. This philosophy is adopted in all recently engineered power plants in authors' company.

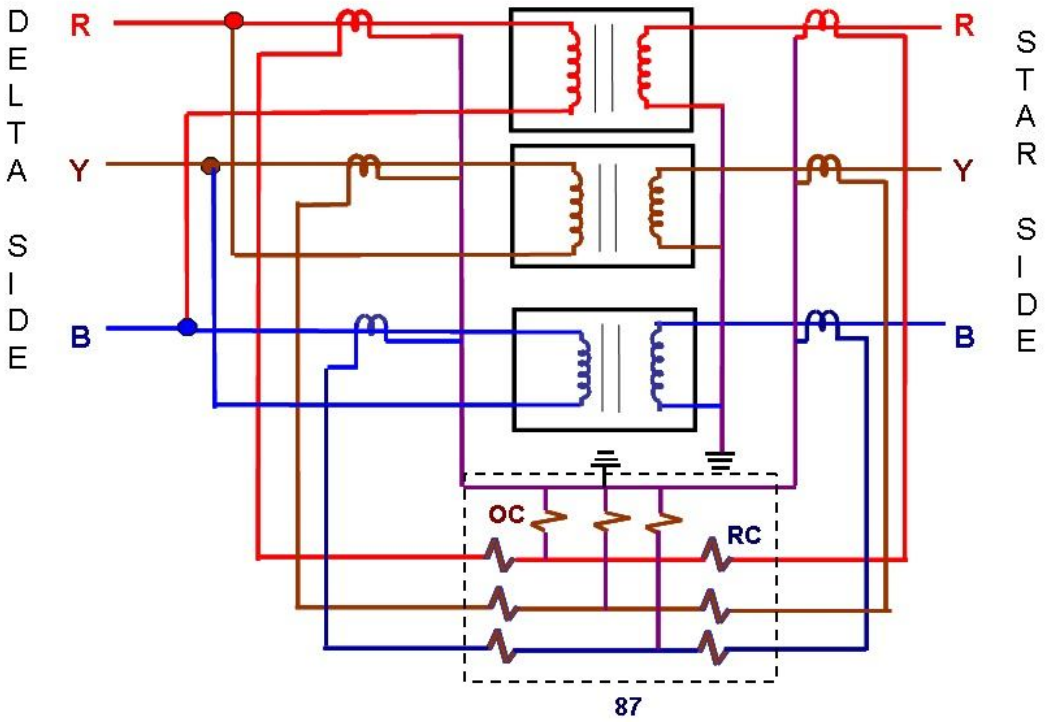

Fig 5 Differential scheme with single CT in delta winding

2.1.1.3 i) Overhang differential protection (87L) or HV Restricted earth fault (REF) protection (64) – Overhang differential protection (87L) is a biased three phase differential protection covering the HV windings as well as the overhead conductors from switchyard to the transformer. This protection is provided for a bank of single phase transformers. This protection is implemented as a differential protection of each individual HV winding and its EHV overhead connection. For this purpose one CT is provided at the HV neutral bushing and its corresponding CT is provided at the EHV breaker end. Refer Fig.6. In this case separate REF protection is not required for Generator transformer. Alternatively a single pole differential can act as a REF protection.

ii) For three phase generator transformer, high impedance restricted earth fault protection (64) is provided. The restricted earth fault protection usually covers only the HV windings. Refer Fig.2.

iii) The zone covered by differential protection and REF protection in case of 3 x single phase GT bank and three phase GT is summarised in Table -1 below.

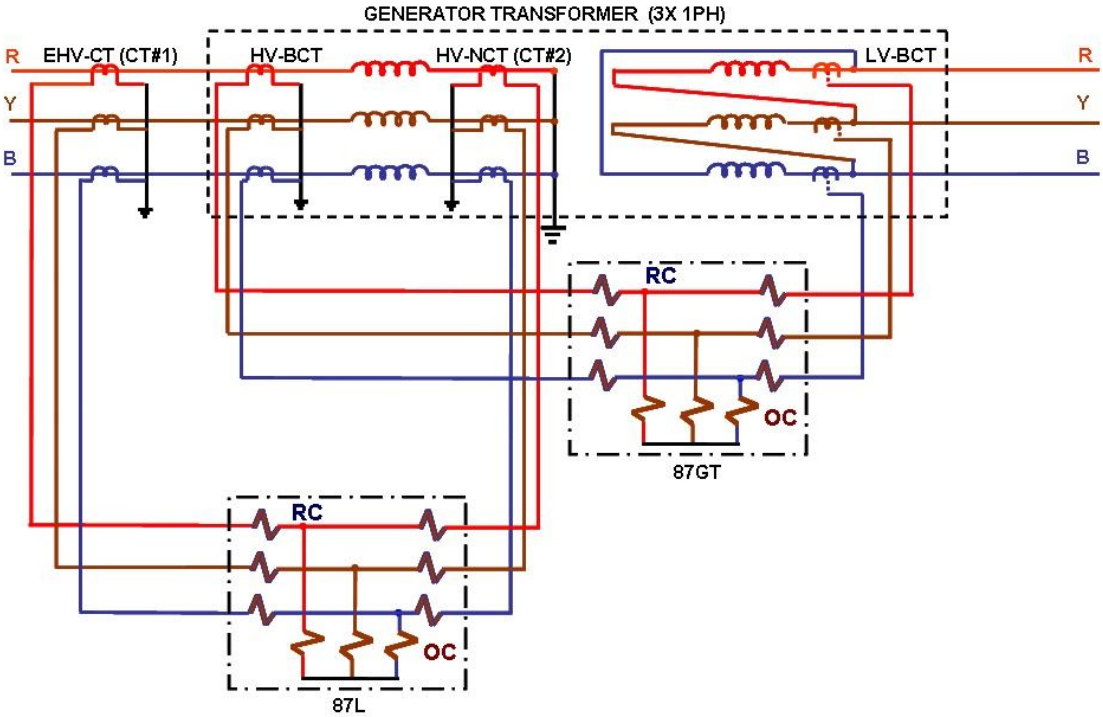

Fig 6 Differential Protection for Single Phase Generator Transformer

Table 1				
Type of GT	**Protection**	**Zone covered**	**CTs used**	**Remarks**
3 x Single Phase GT Bank	Differential protection (87GT)	Transformer windings	Currents from LV bushing CTs are compared against currents from HV bushing CTs.	Ref Fig. 3
	Overhang differential protection (87L)	Transformer HV windings and EHV connection	Currents from HV neutral bushing CTs are compared against currents from EHV CTs.	1. Ref Fig. 3 2. Will respond to phase and earth faults. 3. REF protection (64R) need not be provided if this protection is provided. 4. Widely used
	REF protection (64R)	Transformer HV windings and EHV connection	Summated currents of HV neutral bushing CT is compared against summated currents of EHV CTs.	1. Ref Fig. 3 2. Will respond to earth faults only. 3. 87L protection need not be provided if this protection is provided. 4. Rarely used
Three phase GT	Differential protection (87GT)	Transformer HV windings and EHV connection	Currents from LV bushing CTs are compared against currents from EHV CTs.	Ref Fig. 2
	REF protection (64R)	Transformer HV windings	Current on HV neutral bushing CT is compared against summated currents of HV phase bushing CTs	Ref Fig. 2

2.1.1.4 Overall differential protection (87OA) – This covers the Generator and the GT and functions as a backup to the GT differential protection.

2.1.1.5 Instantaneous over current protection acts as a backup to GT differential protection (50GT).

2.1.1.6 GT HV side over-current protection (51GT)

2.1.1.7 GT HV side stand-by earth-fault protection (51NGT)

2.1.1.8 GT Over-fluxing protection (24) – sensed from selected EHV bus voltage (not shown in figure)

Protections listed in 2.1.1.6 to 2.1.1.8 are provided for protection against uncleared grid faults/disturbances.

2.1.2 Thermal / Mechanical protections

(i) OTI / WTI – alarm and trip

(ii) Pressure Relief Device trip

(iii) Buchholz – alarm and trip

(iv) Oil level low alarm

For single phase transformers all the above protections are provided for each of the phase units.

2.1.3 In addition to the above, fire protection is also provided for the GT.

2.1.4 The electrical protections mentioned in Cl 2.1.1 are suitably grouped in two or three numerical relays. The grouping is done in such a manner that each acts as a backup to the other.

A typical suggested grouping of functions for bank of single phase transformers is given in Table -2.

Table 2	
Sr. No.	**Protection function for bank of single phase transformers**
Relay -1 (R1): Trafo Protection Relay	
1	Overall differential protection (87OA)
Relay -2 (R2): Trafo Protection Relay	
2	Overhang differential protection (87L)
3	GT HV side instantaneous and IDMT phase over current protection (50/51GT)
Relay-3 (R3): Trafo Protection Relay	
4	GT Differential Protection (87GT)
5	GT HV side stand-by earth-fault protection (51NGT)
6	Overfluxing (24)

A typical suggestive grouping of functions for three phase transformers is given in Table -3

Table 3	
Sr. No.	**Protection function for three phase transformers**
Relay -1 (R1): Trafo Protection Relay	
1	Overall differential protection (87OA)
Relay -2 (R2): Overcurrent and Earth fault relay	
2	REF protection (64)
3	GT HV side instantaneous and IDMT phase over current protection (50/51GT)
Relay-3 (R3): Trafo Protection Relay	
4	GT Differential Protection (87GT)
5	GT HV side stand-by earth-fault protection (51NGT)
6	Overfluxing (24)

2.2 Protection of Station Transformer (ST)

2.2.1 Electrical protections (Refer Fig.7)

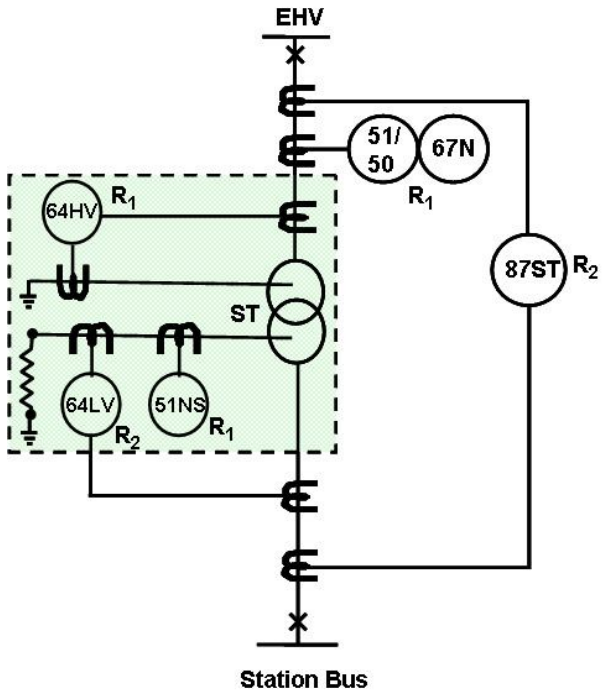

Fig 7 Station Transformer Protection

2.2.1.1 ST differential protection (87ST) - ST differential covers the overhead section of the switchyard in addition to the transformer and busduct connecting the LV winding with the switchgear.

2.2.1.2 HV winding Restricted Earth fault (REF) protection (64HV)

High impedance REF protection is usually provided for HV side winding.

2.2.1.3 HV phase over-current and directional earth fault protection (50/51/67N)

The instantaneous (50) stage of phase and earth fault protection is set to clear HV side faults instantaneously. The IDMT stage of phase overcurrent protection is coordinated with LV side relays. The overcurrent protection also acts a backup to differential protection for HV side faults. The earth fault element is directionalised to ensure pickup for ground faults towards ST and not in grid.

2.2.1.4 LV winding Restricted Earth fault (REF) protection (64LV)

Low impedance REF protection is envisaged for LV side winding. A low impedance REF scheme provides sensitive protection without provision of interposing CT and stabilising resistor as required in high impedance protection scheme.

2.2.1.5 LV Stand-by Earth fault protection (51NS) – This protection is provided to clear uncleared earth faults on LV side. It acts as backup to LV REF protection also.

2.2.1.6 ST Over-fluxing protection (24) – This protection is provided to protect the transformer against grid over voltages. It is sensed from selected EHV bus voltage (not shown in figure)

2.2.2 Thermal / Mechanical protections

(i) OTI / WTI – alarm and trip

(ii) Pressure Relief Device trip

(iii) Buchholz – alarm and trip

(iv) Oil Surge Relay – trip

(v) Oil level low alarm

2.2.3 In addition to the above, fire protection is also provided for the ST.

2.2.4 It may be noted that CTs shown in shaded area in Fig 7 are bushing CTs.

2.2.5 The electrical protections are grouped in two numerical relays. The grouping is done in such a manner that each acts as a backup to the other. The grouping of functions can be as per Table -4.

Table 4	
Sr. No.	**Protection function**
Relay -1 (R1): Overcurrent and Earth fault relay	
1	LV side stand-by earth-fault protection (51NS)
2	HV side phase over current and earth fault protection (50/51/67N)
3.	HV REF protection (64HV)
Relay-2 (R2): Trafo Protection Relay	
3	ST Differential Protection (87ST)
4	LV REF protection (64LV)
5	Overfluxing (24)

2.3 Protection of Unit Transformer (UT)

2.3.1 Electrical protections (Refer Fig.8)

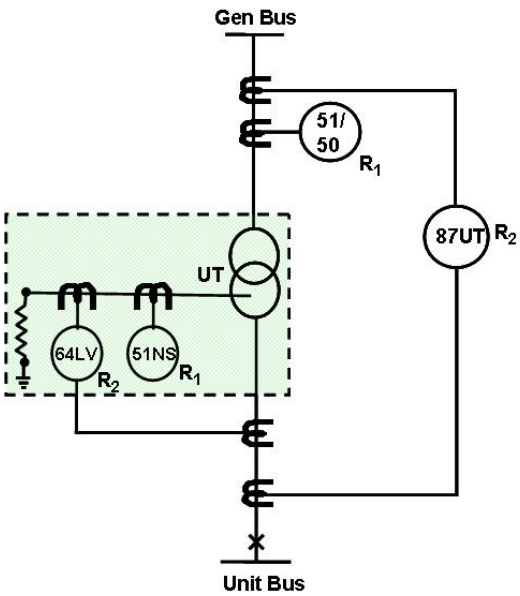

Fig 8 Unit Transformer Protection

2.3.1.1 UT differential protection (87UT) - UT differential covers the transformer and busduct connecting the LV winding with the switchgear.

2.3.1.2 HV phase over-current protection (50/51)

The instantaneous stage of phase over-current protection is set to clear HV side faults instantaneously. The IDMT stage of phase over-current protection is coordinated with LV side relays. It also acts a backup to differential protection for HV side faults.

2.3.1.3 LV winding Restricted Earth fault (REF) protection (64LV)

Low impedance REF protection is envisaged for LV side. The comments made for ST are applicable here also.

2.3.1.4 LV Stand-by Earth fault protection (51NS) – This protection is provided to clear uncleared earth faults on LV side. It acts as backup to LV REF protection also.

2.3.2 Thermal / Mechanical protections

(i) OTI / WTI – alarm and trip

(ii) Pressure Relief Device trip

(iii) Buchholz – alarm and trip

(iv) Oil Surge Relay – trip

(v) Oil level low alarm

2.3.3 In addition to the above, fire protection is also provided for the UT.

2.3.4 It may be noted that CTs shown in shaded area in Fig 8 are bushing CTs

2.3.5 The electrical protections are grouped in two numerical relays. The grouping is done in such a manner that each acts as a backup to the other. A typical grouping of functions could be as per Table -5.

Table 5	
Sr. No.	**Protection function**
Relay -1 (R1): Overcurrent and Earth fault protection	
1	LV side stand-by earth-fault protection (51NS)
2	HV side phase over current protection (50/51)
Relay-2 (R2): Trafo Protection Relay	
3	UT Differential Protection (87UT)
4	REF protection (64)

3.0 Grouping of Protection functions

3.1 There is usually an apprehension regarding provision of LV side REF and differential protection in one relay (Relay 2 in Table-4 and Table-5) as suggested in Cl 2.2.5 and 2.3.5.

3.2 The vector group of ST is star/star with EHV side solidly earthed. UT is a delta/star transformer. On HV side of UT, earth fault is restricted within 10A. Current based protections do not respond to earth faults on HV side of UT. The earth fault is sensed only by voltage based earth fault scheme provided on generator terminals. (59N and 64G in Fig.2 and Fig.3)

3.3 LV side of UT and ST is earthed through neutral grounding resistor (NGR) restricting the earth fault current to typically 300A. Operation of differential protection is doubtful for earth faults on LV side especially for faults within the winding [Ref (2)]. Only REF and SEF protection will definitely respond to LV side earth faults.

3.4 The responses for differential protection, REF and backup over current and earth fault protection under various fault conditions for ST and UT are tabulated in Table-6A and 6B respectively.

Table 6A: Protections for ST					
Faults	**Protections**				
	Differential Protection	**LV REF Protection**	**HV side IDMT OC**	**HV side Inst OC & EF**	**LV Standby Earth Fault**
HV side Phase fault	X	----	X	X	----
HV side earth fault	X	----	X	X	----
LV side Phase fault	X	----	X	----	----
LV side earth fault	Operation doubtful due to limited sensitivity	X	----	----	X

X – Responds to fault.

Table 6B: Protections for UT					
Faults	**Protections**				
	Differential Protection	**LV REF Protection**	**HV side IDMT OC**	**HV side Inst OC**	**LV Standby Earth Fault**
HV side Phase fault	X	----	X	X	----
HV side earth fault	----	----	----	----	----
LV side Phase fault	X	----	X	----	----
LV side earth fault	Operation doubtful due to limited sensitivity	X	----	----	X

X – Responds to fault.

3.5 As seen from Table-6A and 6B, for phase faults over-current protection acts as backup to differential. For earth faults on LV side, standby earth fault acts a backup to REF protection.

3.6 Providing LV REF and differential protection in separate relays has no true value addition, as differential protection will not back up REF protection in majority cases.

3.7 In addition to the electrical protections, mechanical protections are also provided for fast fault clearance of transformer internal faults.

4.0 Conclusions and Recommendations

4.1 The scheme (Fig 5) suggested in this paper can be adopted for differential protection of bank of single phase generator transformers. It eliminates three CTs compared to conventional scheme without sacrificing stability and sensitivity of scheme.

4.2 The zones covered by each protection element have been clearly brought out.

4.3 Suggestions are given (Tables 2 to 5) for grouping protection elements in two or three numerical relays.

4.4 Justification for including LV REF and differential protection in the same relay for station transformer / unit transformer is given.

5.0 Acknowledgement

The authors have greatly benefited from advice given by Mr D Guha on this topic.

6.0 References

[1] Protective Relaying Principles and Applications by Blackburn.

[2] “Sensitivity Comparison of Differential, REF and Over-current Protection”, K Rajamani. IEEMA Journal, October 2002, pp 28 – 33.

ieema journal

Zig Zag Transformer – Fault Current Distribution, Short Circuit testing and Single Phase loading

Dr K Rajamani and Bina Mitra,

Reliance Infrastructure Ltd., MUMBAI

(July 2013, IEEMA Journal, Page 84 to 91)

Zig Zag Transformer - Fault Current Distribution, Short Circuit testing and Single Phase loading

Dr K Rajamani and Bina Mitra, Reliance Infrastructure Ltd., Mumbai

1.0 Introduction

Zig Zag transformer, is used as Neutral Grounding Transformer (NGT) to create ground in an ungrounded system. This has been extensively discussed in Ref [1]. How to specify NGT parameters without ambiguity is given in Ref [2]. In this article, following aspects of Zig Zag connection are further covered:

(i) Zig Zag connection for power transformer application.

(ii) Fault current distribution for different type of faults.

(iii) Zero sequence impedance measurement.

(iv) NGT with / without NGR (Neutral Grounding Reactor).

(v) NGT with secondary winding for auxiliary supply.

(vi) Short circuit testing methodologies of NGT.

2.0 Zig Zag connection for Power Transformer application

The main advantages of Zig Zag connection in power transformer are:

(i) It offers ground fault isolation between primary and secondary. A line to ground fault on Zig Zag side is reflected as line to line fault on the primary side. Refer Figs 4 and 8.

(ii) Since neutral is available, any type of grounding can be adopted.

(iii) If the load is likely to contain significant DC component or third harmonic component, the fluxes due to currents in Zig and Zag winding on the same limb of transformer cancel each other and results in minimum saturation.

In case of Mumbai Distribution System, the vector group of 33/11 kV, 20 MVA transformers is Dzn10. The neutral of 11 kV Zig Zag winding is solidly grounded. In case of Mumbai Transmission System, initially vector group of 220 / 33 kV, 100/125 MVA transformer was YNd11. The 33 kV system was earthed through NGT (Zig Zag grounding transformer) to limit earth fault current to 8 kA, to obtain effectively grounded system. The vector group of transformer for subsequent procurement was changed from YNd11 to YNzn11 due to reasons cited above. Also Neutral Grounding Reactor (NGR) was introduced for 33 kV Zig Zag winding grounding instead of NGT, to limit ground fault current to 8kA. NGR is a simpler and less costly device compared to NGT. The existing YNd11 transformers and

July 2013, IEEMA Journal, Page 84 to 91

new YNzn11 transformers can be paralleled as vector group by clock position is same.

2.1 Delta Zig Zag Transformer under Balanced condition

The winding arrangement is shown in Fig 1.

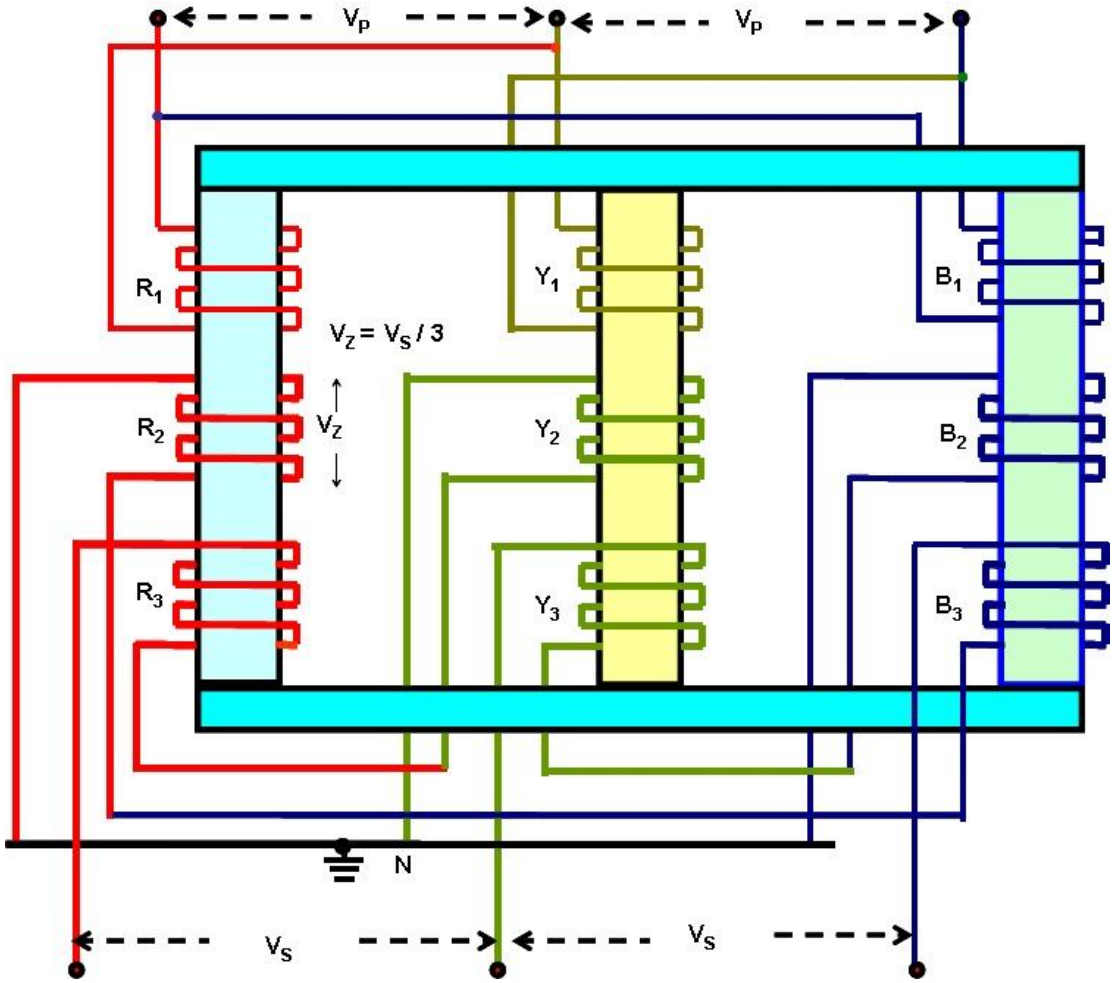

Fig 1 Delta Zig-zag Transformer

A simplified representation of same is shown in Fig 2.

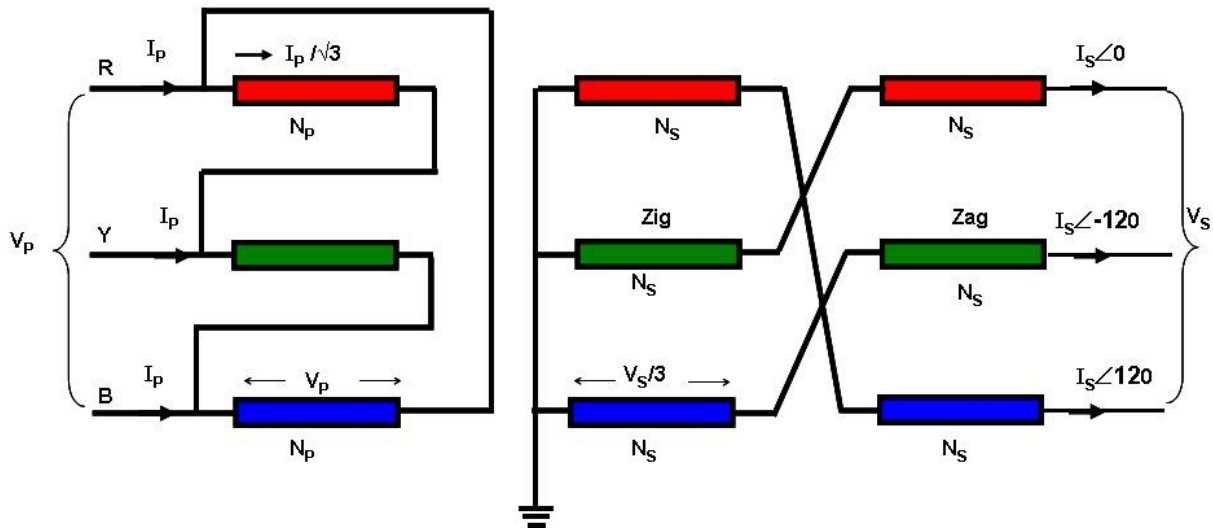

Fig 2 Delta Zig-zag

For verification of vector group refer [3]. The point to note is that the voltage rating of Zig or Zag winding is one third of line voltage.

Rated secondary voltage = V_S

Rated primary voltage = V_P

Voltage Rating of Zig or Zag winding = $\frac{V_S}{3}$

Number of Turns of Zig or Zag winding = N_S

Number of Turns of Primary winding = N_P

$$\left(\frac{N_S}{N_P}\right) = \frac{\left(V_S/3\right)}{V_P} = \left(\frac{1}{3}\right)\left(\frac{V_S}{V_P}\right) \qquad \text{.....(1)}$$

Primary AT = $\left(\frac{I_P}{\sqrt{3}}\right)N_P$

Corresponding Secondary AT = $(I_S N_S \angle 0^\circ - I_S N_S \angle 120^\circ)$

$= \sqrt{3} I_S N_S$

(Zig and Zag windings on the same limb carry current from two phases shifted by 120°).

Equating primary and secondary ATs,

$$\left(\frac{I_P}{\sqrt{3}}\right)N_P = \sqrt{3}I_S N_S \qquad \text{.....(2)}$$

From Eqns, (1) & (2)

$$\left(\frac{I_P}{I_S}\right) = 3\left(\frac{N_S}{N_P}\right) = \left(\frac{V_S}{V_P}\right)$$

Current ratio is inversely proportional to voltage ratio as anticipated for balanced conditions.

2.1.1 Fault Current Distribution for balanced and unbalanced faults

The major name plate details of a typical transformer in a Receiving Station in Mumbai Discom are as follows:

20 MVA, 33 / 11 kV, Dzn10

From Eqn (1), Turns Ratio $\left(\frac{N_S}{N_P}\right) = \left(\frac{1}{3}\right)\left(\frac{11}{33}\right)$

$$= \frac{1}{9}$$

Apply low voltage (e.g. 415V) on 33 kV side. Create faults on Zig Zag side. Following are observed values.

(i) Three phase fault – Refer Fig 3

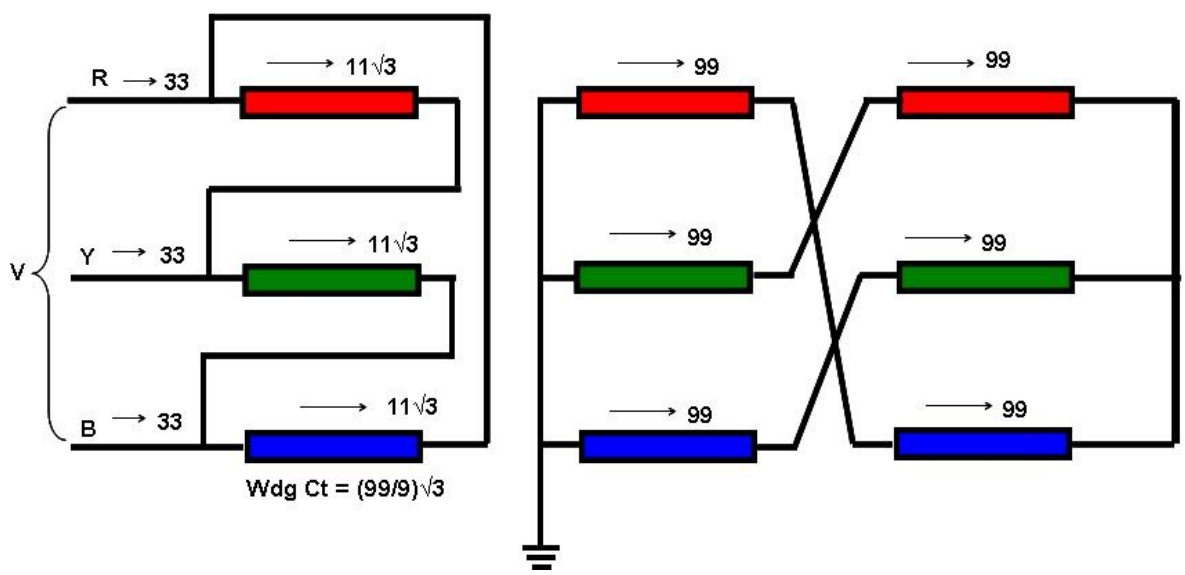

Fig 3 Delta Zig-zag - 3Ø Short Circuit

Secondary side (Zig Zag): $I_R = I_Y = I_B = 99A$

Primary side (Delta): $I_R = I_Y = I_B = 33A$

Since it is a balanced fault, currents are inversely proportional to voltage ratio (33 / 11 kV).

(ii) Line to Ground fault – Refer Fig 4

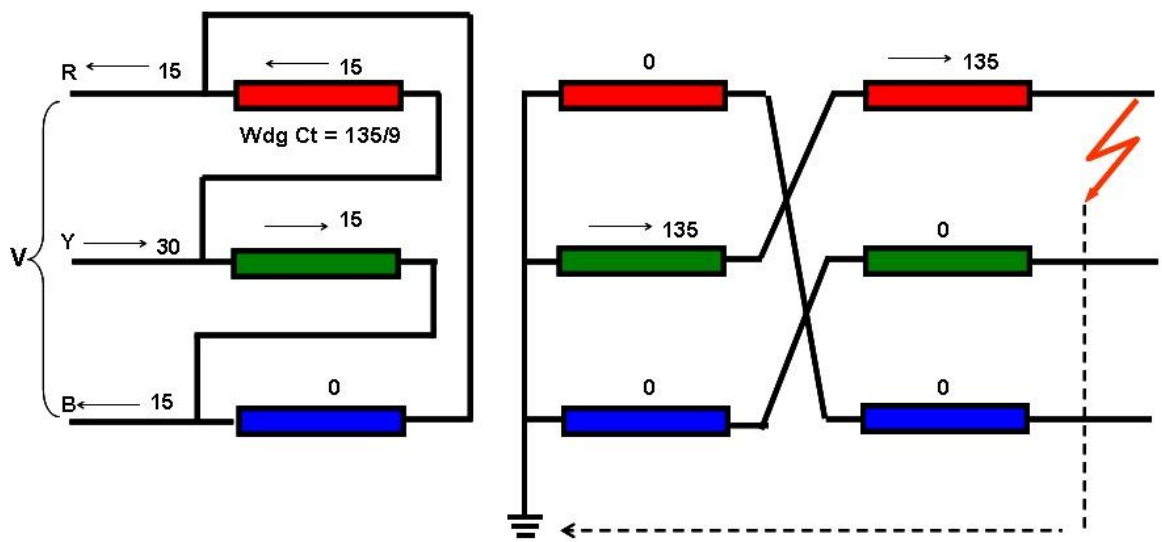

Fig 4 Delta Zig-zag – Line to ground Short Circuit

Secondary side: $I_R = I_N = 135A$; $I_Y = I_B = 0$

Primary side: $I_R = I_B = 15$; $I_Y = 30$

Current flows in only one winding (Zig or Zag) on two limbs. Both Zig and Zag windings of third limb carry no current. The current on primary winding is determined by turns ratio (135/9 = 15). Current through one of the primary windings is zero as corresponding secondary AT is zero. The typical line current distribution is 1:1:2.

(iii) Line to Line fault – Refer Fig 5

Secondary side: $I_R = -I_Y = 90A$; $I_B = 0$

Primary side: $I_Y = -I_B = 30A$; $I_R = 0$

The current on primary winding is determined by turns ratio (90/9 = 10). Current through centre phase of the primary windings is due to addition of two currents in Zig and Zag windings phase shifted by 180°. The typical line current distribution is 1:1:0.

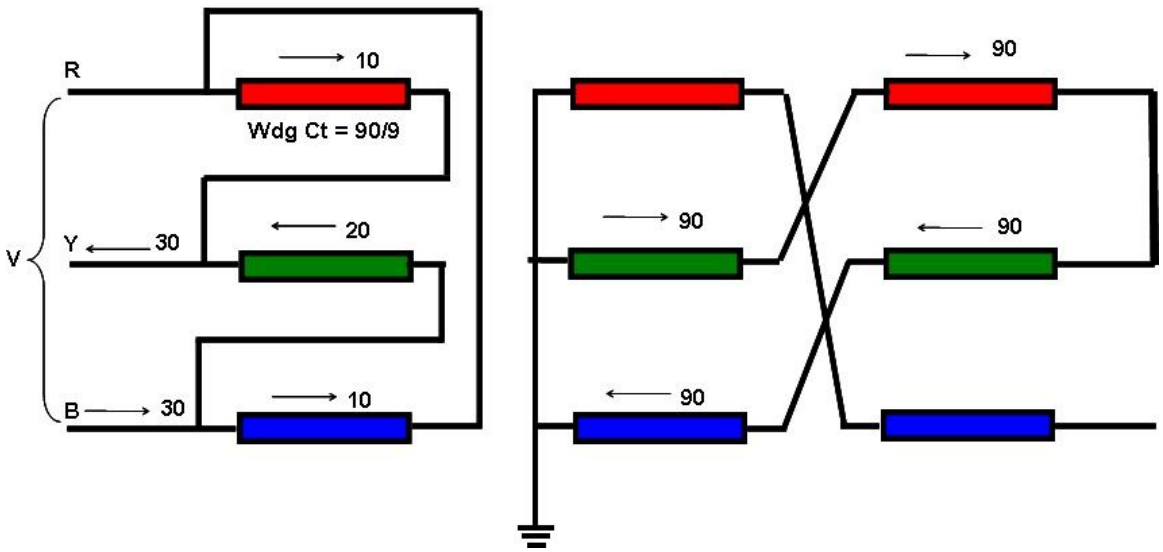

Fig 5 Delta Zig-zag – Line to line Short Circuit

2.2 Star - Zig Zag Transformer under Balanced condition

Simplified representation of winding arrangement is shown in Fig 6.

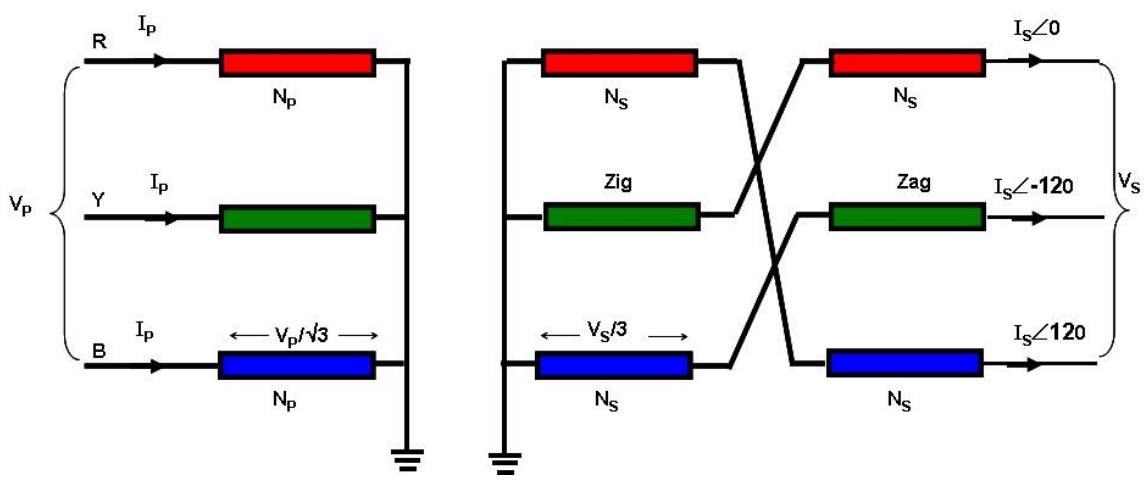

Fig 6 Star Zig-zag

$$\left(\frac{N_S}{N_P}\right)=\frac{\left(V_S/3\right)}{\left(V_P/\sqrt{3}\right)}=\left(\frac{1}{\sqrt{3}}\right)\left(\frac{V_S}{V_P}\right) \qquad \text{.....(3)}$$

Primary AT = $I_P N_P$

Corresponding Secondary AT = $(I_S N_S \angle 0° - I_S N_S \angle 120°)$

$= \sqrt{3} I_S N_S$

Equating primary and secondary ATs,

$I_P N_P = \sqrt{3} I_S N_S$ .....**(4)**

From Eqns, (3) & (4)

$$\left(\frac{I_P}{I_S}\right) = \sqrt{3}\left(\frac{N_S}{N_P}\right) = \left(\frac{V_S}{V_P}\right)$$

Current ratio is inversely proportional to voltage ratio as anticipated for balanced conditions.

2.2.1 Fault Current Distribution for balanced and unbalanced faults

The major name plate details of a typical transformer in a Substation in Mumbai Transmission System are as follows:

125 MVA, 220 / 33 kV, YNzn11

From Eqn (3), Turns Ratio $\left(\frac{N_S}{N_P}\right) = \left(\frac{1}{\sqrt{3}}\right)\left(\frac{33}{220}\right)$

$$= \frac{1}{11.55}$$

Apply Low voltage on 220 kV side. Create faults on Zig Zag side. Following are observed values.

(i) Three phase fault – Refer Fig 7

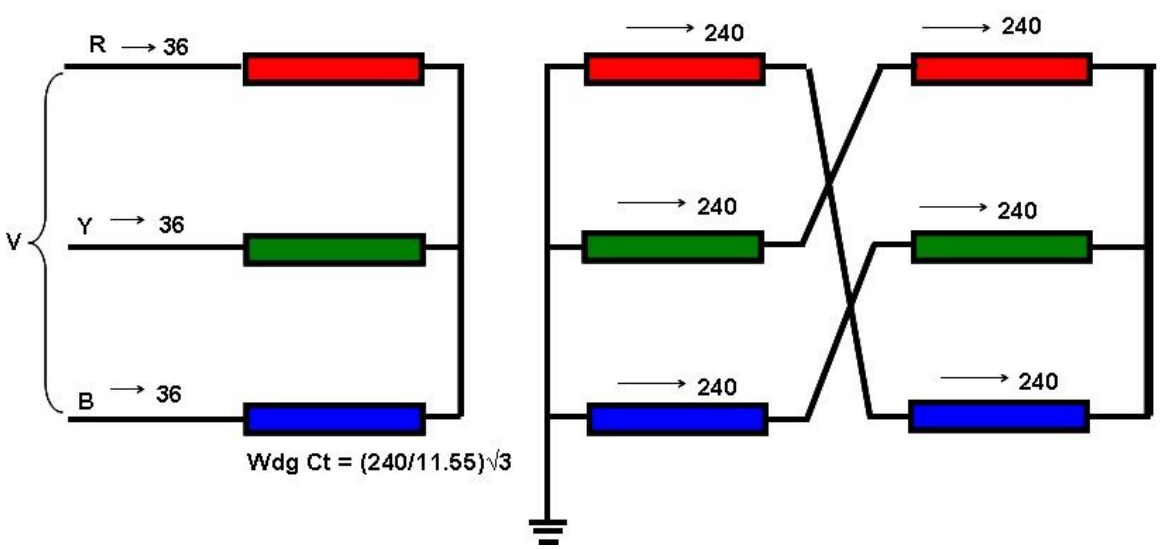

Fig 7 Star Zig-zag - 3Ø Short Circuit

Secondary side (Zig Zag): $I_R = I_Y = I_B = 240A$

Primary side (Star): $I_R = I_Y = I_B = 36A$

Since it is a balanced fault, currents are inversely proportional to voltage ratio (220 / 33 kV).

(ii) Line to Ground fault – Refer Fig 8

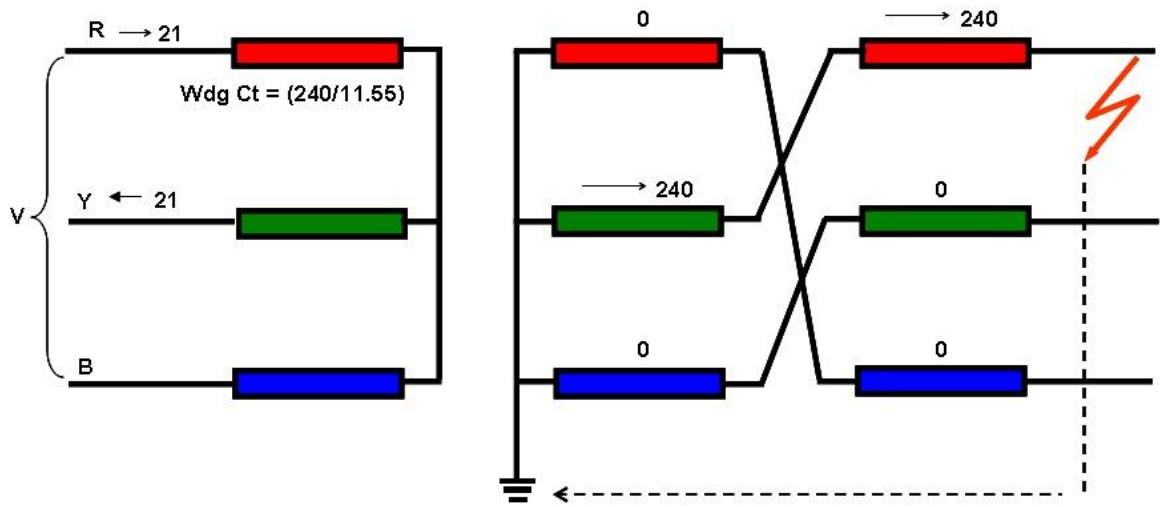

Fig 8 Star Zig-zag – Line to ground Short Circuit

Secondary side: $I_R = I_N = 240A$; $I_Y = I_B = 0$

Primary side: $I_R = - I_Y = 21$; $I_B = 0$

The current on primary winding is determined by turns ratio (240/11.55 = 21). The typical line current distribution is 1:1:0.

(iii) Line to Line fault – Refer Fig 9

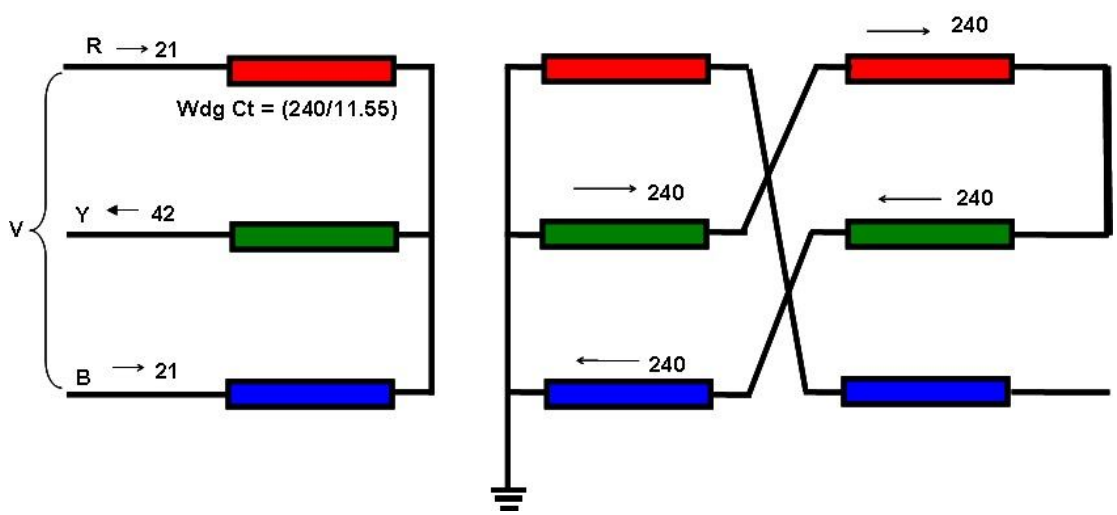

Fig 9 Star Zig-zag – Line to line Short Circuit

Secondary side: $I_R = - I_Y = 240A$; $I_B = 0$

Primary side: $I_R = I_B = 21$; $I_Y = 42$

The current on primary winding is determined by turns ratio (240/11.55 = 21). Current through centre phase of the primary windings is due to addition of two currents in Zig and Zag windings phase shifted by 180°. The typical line current distribution is 1:1:2.

(iv) Under normal testing procedure, with 415V applied on 220 kV side, the resulting primary current will be less than 5A. The relay recorded current (fed by, say 500/1 CT) is too small for making accurate assessment of scheme testing. But by providing capacitors in series with transformer much higher test current can be achieved. The results presented above used this technique. Theory and application of series capacitors for scheme testing of EHV transformers will be covered in a future article.

3.0 Zero sequence impedance measurement at site

A common assumption made is that zero sequence (leakage) impedance of transformer is nearly same as Positive (or Negative) sequence impedance. This assumption is grossly in error if one of the windings is Zig Zag. Sample site test results are presented below.

(i) Rating of transformer: 20 MVA, 33 / 11 kV, Dzn10, $Z_P = Z_N = 12\%$. The set up is shown in Fig 10.

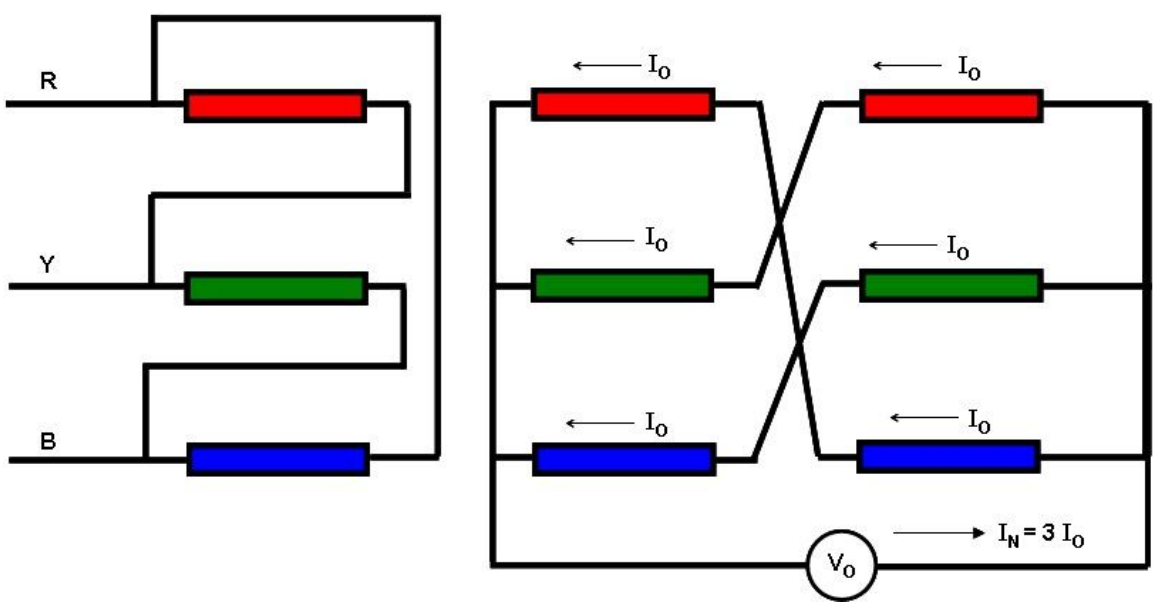

Fig 10 Zero Sequence Impedance Measurement at site – Dzn10

Short the three terminals of Zig Zag. Apply single phase voltage between shorted terminal and neutral. Use low voltage high current set. Applied voltage V_0 shall be typically within 10 Volts. Measure the current drawn from supply (I_N). Since the voltage applied is low, measurement of voltage shall be done at transformer terminal and *not at the source*. Otherwise large error is introduced due to voltage drop in connecting cable between source and transformer.

$$Z_0 = \frac{V_0}{I_0}$$

$$= \frac{V_0}{\left(I_N / 3\right)}$$

$$= \frac{3V_0}{I_N}$$

Following are site test results:

When applied voltage V_0 = 5V, the measured current I_N = 180A

$$Z_0 = \frac{3 \times 5}{180}$$

$$= 0.0833\ \Omega$$

$$Z_{BASE} = \frac{11^2}{20}$$

$$= 6.05\ \Omega$$

$$Z_0 = \left(\frac{0.0833}{6.05}\right) \times 100$$

$$= 1.4\ \%$$

Z_0 (1.4%) is much smaller than Z_P (12%). The correct value of Z_0 shall be used when performing fault level calculations.

(ii) Rating of transformer: 125 MVA, 220 / 33 kV, YNzn11, $Z_P = Z_N$ = 15%

Following are site test results:

When applied voltage V_0 = 5V, the measured current I_N = 112A

$$Z_0 = \frac{3 \times 5}{112}$$

$$= 0.134\ \Omega$$

$$Z_{BASE} = \frac{33^2}{125}$$

$$= 8.712\ \Omega$$

$$Z_0 = \left(\frac{0.134}{8.712}\right) x\ 100$$

$$= 1.5\%$$

Z_0 is much smaller than Z_P.

(iii) In both cases (i) and (ii) above, Z_0 value is not influenced whether primary is open or shorted.

4.0 Single phase loading of Zig Zag - Star transformer

Consider an EHV switchyard which has a bus fed from delta connected winding of a transformer. This bus is ungrounded. The most popular method to ground the bus is to provide Zig Zag grounding transformer. Switchyards are usually located in remote places where low voltage supply is not available to feed single phase loads. In this context, a suggestion has been made to add a star winding to Zig Zag grounding transformer to derive auxiliary single phase supply. The feasibility of the suggested scheme is discussed in following analysis.

(i) Load is connected between Phases of Star winding. Refer Fig 11.

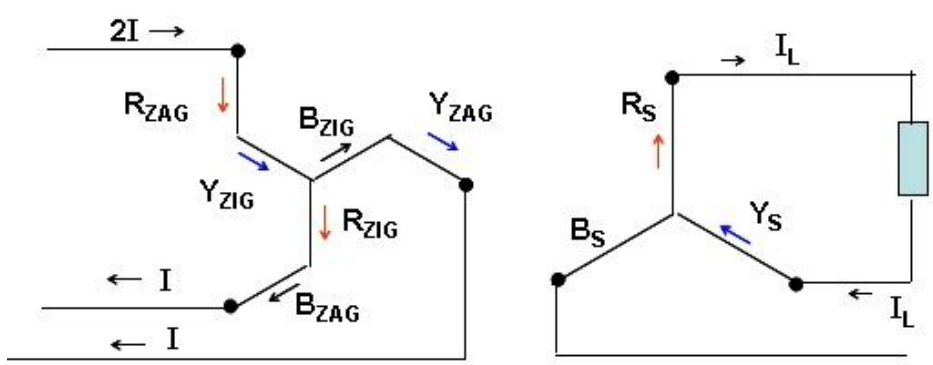

Fig 11

AT balance is obtained when the when load is connected line to line. ATs due to currents in R_{ZAG} and R_{ZIG} are balanced by load current flowing in R_S. Similarly ATs due to currents in Y_{ZIG} and Y_{ZAG} are balanced by returning load current flowing in Y_S. ATs due to current in B_{ZAG} and B_{ZIG} neutralize each other and balancing current from star side (B_S) is not

required. Hence it is feasible to draw single phase load in this case. If the required single phase voltage is 240V, the star winding shall be rated for line voltage of 240V. The single phase loads will be distributed among RY, YB and BR.

(ii) Load is connected between Phase and Neutral of Star winding. Refer Fig 12.

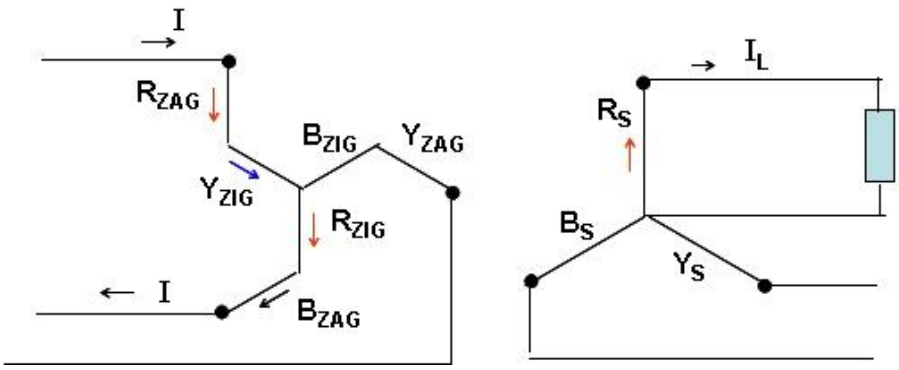

Fig 12

ATs due to currents in R_{ZAG} and R_{ZIG} can be balanced by load current flowing in R_S. Since Y and B phase star winding are open, very little current is expected to flow through B_{ZIG} and Y_{ZAG}. The reflected load current is forced to return through Y_{ZIG} and B_{ZAG}. Since the corresponding star windings are open, the current on Zig Zag side behaves like exciting current or magnetizing current. The magnetizing impedance is very high. Hence the current that can be delivered is very low and even if some current is forced to flow, the core will be saturated. Regulation also will be too poor. In summary, it is not practical to supply isolated single phase load connected between phase and neutral of star winding. If single phase loads are connected between phase and neutral, distributed in all three phases and if phase balancing is achieved with minimum neutral current flow, regulation will be normal.

5.0 NGT with / without NGR

Zig Zag Neutral Grounding transformer is used to ground ungrounded system. Normally confusion does not arise when the ground fault current has to be limited to the following:

(i) Low value (say less than 300A). In this case, NGT with Neutral Grounding Resistor will be the practical choice. Refer [1].

(ii) High value (say more than 60% of three phase fault current for effectively grounded system). In this case, only NGT with appropriate zero sequence reactance will suffice.

However when the ground fault current has to be limited to an intermediate value like 2 to 3 kA, provision of NGR shall be critically examined. This is illustrated with an example.

5.1 System Data

The system data:

Transformer rating: HV / IV / LV : 400 kV / 132 kV / 33 kV, YNynΔ

Impedance on 250 MVA base

HV – IV : 0.10 pu

HV – LV : 0.17 pu

IV – LV : 0.08 pu

400 kV fault level = 50 kA

The objective is to provide grounding for 33 kV system so that earth fault current on 33 kV side is limited to 2000 A.

Base MVA = 250

Base Voltage = 33 kV

$$\text{Base Impedance, } Z_{BASE} = \frac{33^2}{250}$$

$$= 4.356\ \Omega$$

$$\text{Base Current} = \frac{250}{\left(\sqrt{3} x 33\right)}$$

$$= 4374\ A$$

$$400\ kV\ \text{fault level} = \sqrt{3} \times 400 \times 50$$

$$= 34{,}640\ MVA$$

$$X_{SYS} = \frac{250}{34{,}640}$$

$$= 0.0072\ pu$$

$$X_1 = 0.17 + 0.0072$$

$$= 0.1772\ pu$$

$$X_2 = X_1$$

5.2 Case 1 - NGT without NGR

The equivalent circuit is shown in Fig 13. NGR is ignored for this case.

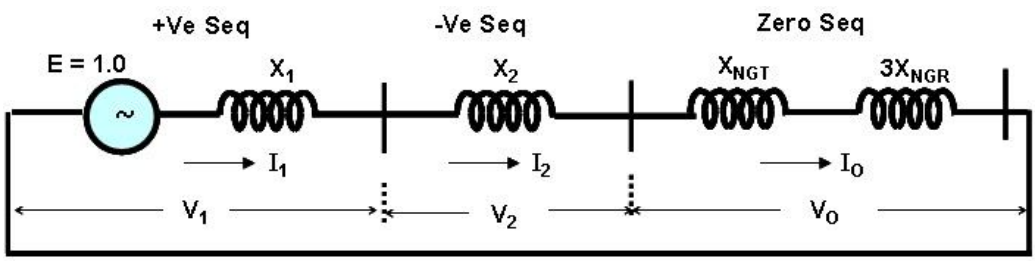

Fig 13

$I_F = 2000\ A$

$= \dfrac{2000}{4374}$

$= 0.4573\ pu$

$I_0 = \dfrac{I_F}{3}$

$= 0.1524\ pu$

$I_0 = \dfrac{1.0}{\left(X_1 + X_2 + X_0^T\right)}$

$X_1 + X_2 + X_0^T = 6.5617$

$X_0^T = 6.5617 - 0.1772 - 0.1772$

$= 6.2073\ pu$ **.....(5)**

$= 6.2073 \times 4.356$

$= 27.04\ \Omega$

Notional Rating of NGT = $3 \times \left(\dfrac{33}{\sqrt{3}}\right) \times \left(\dfrac{2000}{3}\right)$

$= 38.1\ MVA$

$=$ say $40\ MVA$

Base Impedance, $Z_{BASE} = \dfrac{33^2}{40}$

$= 27.23\ \Omega$

$X_0^T = \left(\dfrac{27.04}{27.23}\right) \times 100$

$= 100\%$

For grounding transformer, 100% impedance is not an abnormal figure and is achievable.

5.3 Case 2 - NGT with NGR

The impedances are worked out considering NGR.

Desired zero sequence impedance to limit ground fault current within 2000A is (Refer Eqn (5):

$X_0^T = 6.2073\ pu$

It is customary to assume Zero sequence reactance of NGT to be $3X_1$.

$X_0^{NGT} = 3 \times 0.1772$

$= 0.5316\ pu$

$= 0.5316 \times 4.356$

$= 2.3157\ \Omega$

Zero sequence reactance of reactor = X_0^R

$X_0^T = X_0^{NGT} + 3\,X_0^R$ *(Refer Fig 13)*

$$X_0^R = \frac{(6.2073 - 0.5316)}{3}$$

$= 1.8919\ pu$

$= 1.8919 \times 4.356$

$= 8.2411\ \Omega$

5.4 Reason for choosing only NGT and not NGT and NGR

The grounding transformer reactance is 27 Ω without NGR and 2.3 Ω with NGR. It is very uneconomical to design a transformer with very low reactance value as in the case with NGR for following reasons.

The reactance is directionally proportional to T^2. If the reactance value is low, the number of turns (T) will be low. For a given applied voltage, volts per turn (V/T) will be high and hence flux (φ) will be high.

$$\frac{V}{T} = \varphi = 4.44 \times f \times B \times A$$

For a given flux density B (say, 1.6 Tesla), area of cross section (A) will be high. The reactance is inversely proportional to coil height H. This has to be increased to get lower reactance. The core frame height also increases correspondingly. Because of the above two reasons, the core weight and core loss are substantially higher for grounding transformer with lower reactance. The

differential cost in capex would be about 20 to 25% for transformers between low reactance (2.3 Ω / phase) and high reactance (27 Ω / phase). More over, NGR cost will be additional.

Also the core loss with high reactance transformer will be lower by 4 KW compared to low reactance transformer. The major loss in grounding transformer is only core loss (as it does not carry load current under normal conditions), The opex in a life time of 30 years will be substantial.

In conclusion, whenever the ground fault current is to be limited to say 2 to 3 kA, which is neither too low nor too high, it is prudent to have preliminary discussions with vendors before including NGR along with NGT.

6.0 Short Circuit Testing of NGT

Short circuit test for NGT is done in two ways as per Cl 10.9.8 of IEC 60076 -6 [4]:

6.1 Alternative 1

The earthing transformer is connected to a single phase supply between the three line terminals connected together and the neutral terminal. Refer Fig 14.

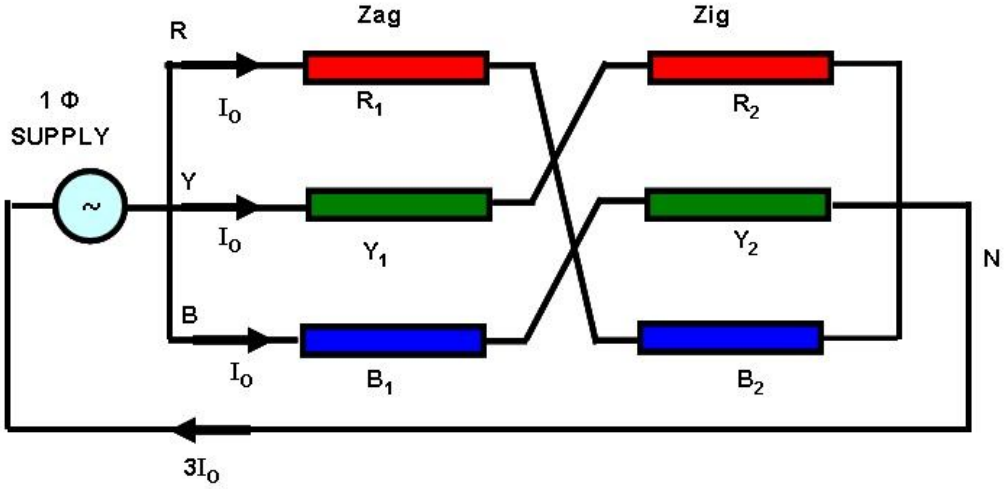

Fig 14

The source in testing laboratory shall have the capacity to deliver rated ground fault current $3I_0$, where I_0 is the current circulated in each winding.

The tests done in site (described in Cl 3.0) are conceptually same except that the test voltage and current are much lower.

6.2 Alternative 2

The earthing transformer is connected to a symmetrical three phase supply and a short circuit shall be established between one line terminal and the neutral terminal. Refer Fig 15.

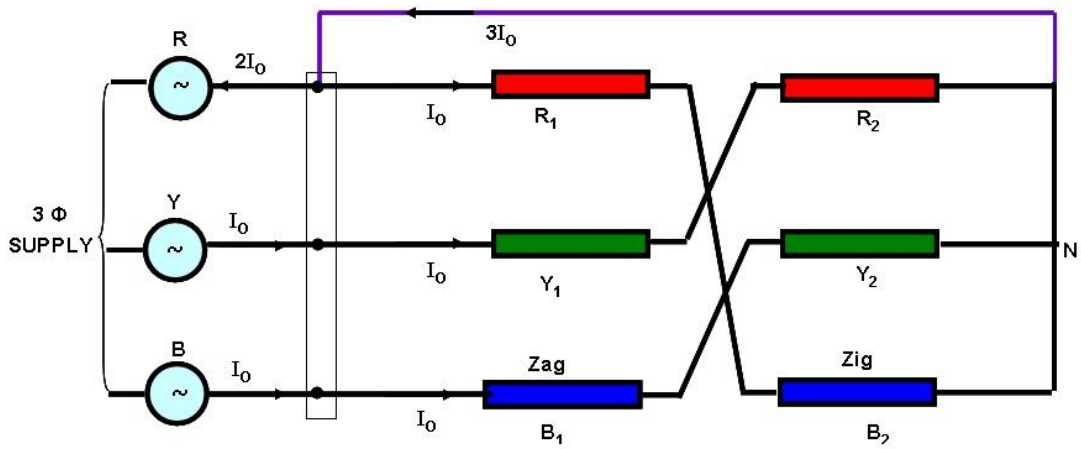

Fig 15

There will be equal current (I_0) in all the windings. The current in short circuited link is $3I_0$. However the maximum current drawn from source is only $2I_0$. compared to $3I_0$ in Alternative 1. This is the reason why the testing laboratories prefer to perform short circuit testing at full voltage adopting Alternative 2 as the current source can be of lower capacity. The theory behind this testing method is given in Appendix 1 for perusal by specialists and academics. Field engineers and generalists can skip the same.

7.0 Acknowledgement

The discussions with Prof S V Kulkarni of IIT Mumbai have been very useful in appreciating nuances of Zig Zag connection. Clarifications and test results furnished by Mr. Pandyan of Quality Power helped in understanding and interpreting short circuit testing methods of NGT. The authors have greatly benefited from discussions with Mr. D Guha on this esoteric topic and his support was pivotal in introducing Zig Zag winding in EHV power transformers in Mumbai Transmission Division of our company.

8.0 Conclusion

The operation of Zig Zag connection has been a mystery to many of the field engineers. This write up hopefully helps to understand the underlying principles during normal and short circuit conditions of both power transformer and NGT.

9.0 References

[1] "Grounding of electrical system – Part 2", K Rajamani, IEEEMA Journal, June 2006, pp 51 - 58.

[2] "Grounding transformer specification without ambiguity", K Rajamani and H C Mehta, IEEEMA Journal, Aug 2001, pp 52 - 54.

[3] "Vector group testing of transformer at site", K Rajamani, IEEEMA Journal, Aug 2010, pp 92 - 96.

[4] IEC 60076 -6, Power Transformers, Part 6 – Reactors.

[5] J& P Transformer Book, 9th Edition, 1961.

[6] Transformer engineering by L F Blume, Wiley, 1951.

Appendix 1

The following analysis is based on Ref [5] and [6].

By inspection of Fig 15, following three voltage relationship are derived:

$B_2 - R_1 = 0$ **.....(6)**

$R_2 - Y_1 = NY = RY$ **.....(7)**

$Y_2 - B_1 = NB = RB$ **.....(8)**

Voltage equations for the Zig and Zag winding on each core are related to impedance drop as follows (Fig 16):

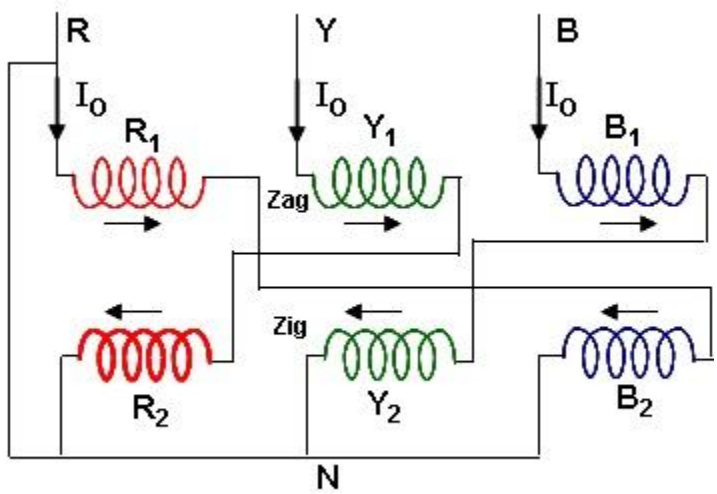

Fig 16

$R_2 - R_1 = I_0 Z_0$ **.....(9)**

$Y_2 - Y_1 = I_0 Z_0$ **.....(10)**

$B_2 - B_1 = I_0 Z_0$ **.....(11)**

Z_0 is the leakage impedance between Zig and Zag winding.

The phasor diagram for voltages that satisfies Eqns. (6) to (11) is shown in Fig 17. The voltages present under normal conditions in the six windings are RD (R_1^O), DN (B_2^O), YE (Y_1^O), EN (R_2^O), BF (B_1^O) and FN (Y_2^O).

Assuming R – N is shorted, N collapses into R. The voltages after shorting are indicated without superscript 0. The knees of Zig Zag are displaced by equal amount (D to H, E to J and F to K).

Eqn (9) is satisfied if JR and HR (= NJ) are vectorialy subtracted to give RN which is the I_0Z_0 drop which in turn is equal to phase voltage. Incidentally, the resulting current after short circuit follows from this equation, i.e., $I_0 = V_{Phase} / Z_0$.

Eqn (10) is satisfied if RK and YJ (=NK) are vectorialy subtracted to give RN which is I_0Z_0 drop.

Eqn (11) is satisfied if HR (=KG) and BK are vectorialy subtracted to give BG (= RN) which is I_0Z_0 drop.

The currents in lines will be in the ratio of 1:1:2. as given in Fig 15.

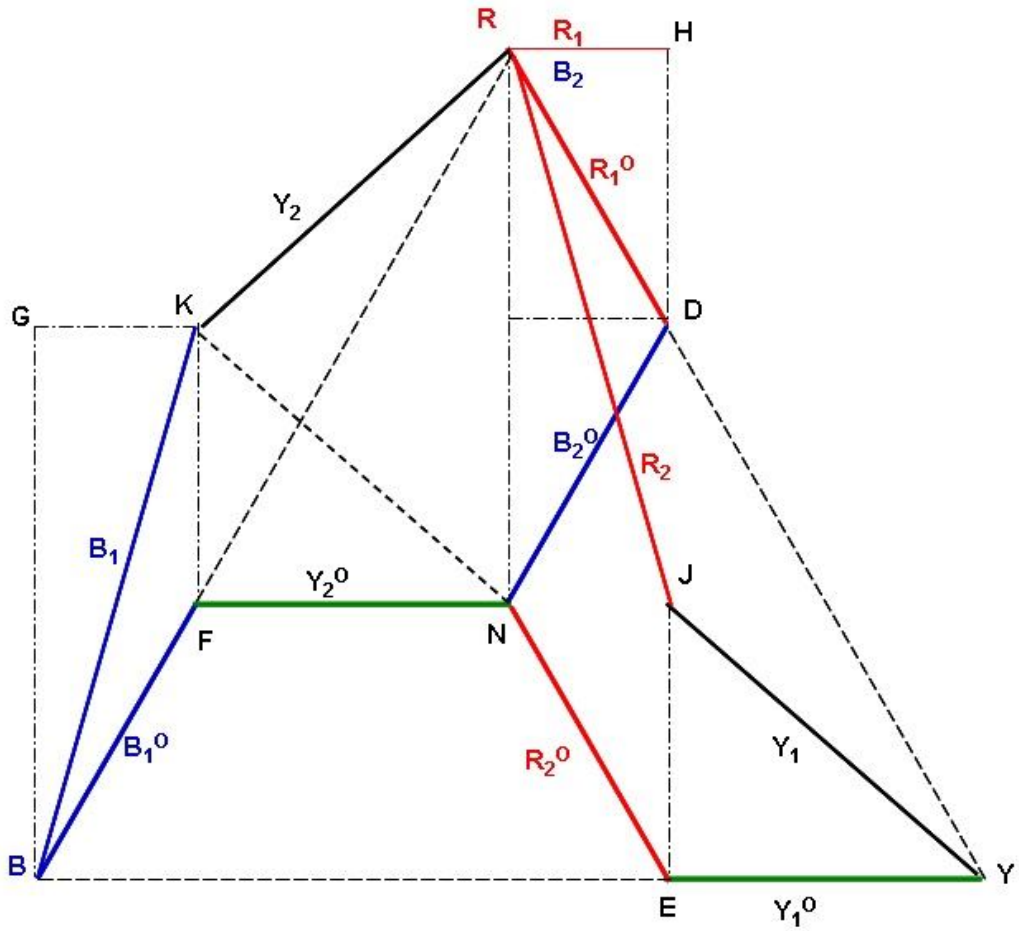

Fig 17

Comments from Scrutineers' and Author's Replies

1.0 Scrutineers' Comment

Since Mumbai was electrified more than 100 years back, it is interesting to look at the transformer connection vectors used there. Dzn10 connection looks unique as it brings the output voltage vector 90° lagging to input 220kV vector (YNd11+ Dzn10). Usually the consumer voltage vector is brought back to same as generator output vector (YNd11 Generator Transformer + YNyn Interconnecting Transformer + Dyn1 Distribution Transformer in India and Europe YNd1 + YNyn + Dyn11 in US, Japan) Was there any specific reason for using Dzn10 connection for secondary of MV/LV transformer? What is the vector group of distribution transformers used at Mumbai?

In the first edition of J&P Transformer book (1925) in chapter V, the following is mentioned about Delta/interconnected-star connection (today's Zig Zag winding) Application: The chief application of this connection is for stepping down to give a supply to three phase synchronous converters, and at the same time providing, on the interconnected–star side, a neutral point from which a C.C. connection can be taken for the purpose of providing a C.C. neutral. On account of the interconnection on the secondary side, considerable C.C out of balance current can be taken without it having any ill effect on the magnetic characteristics of the transformer. Note- This connection only becomes desirable for three-phase shell type transformers and for banks of three single–phase transformers. The interconnection on the secondary side is not necessary for three-phase core type transformers, as if a straight star winding is used continuous current flows along the magnetic circuit in the same direction in all three limbs, and as the corresponding continuous flux must find its return path through the air or through the oil and the transformer tank, its magnetic effects are practically negligible. One of the advantages of connection- third harmonic pressures are eliminated by the circulation of third harmonic currents in the primary delta. One of the disadvantages- on account of the phase displacement between the halves of the windings which are connected in series to form each phase, the interconnected–star winding requires 15 ½ % additional copper with a corresponding increase

in the total insulation. The frame size may therefore be larger and the cost of the transformer increased."
(CC means constant current - today's DC).

Author's Reply

We contacted old veterans at BSES. They were not aware of specific reasons for evolution of Dz10 transformer. But a majority felt the reason could be as hinted in J&P hand book. In 1930s, the major load on BSES network could have been Railway traction which was 1500 Volts DC. Whenever converter transformers are used, Zig Zag connection is very beneficial. If the load contains significant DC component, the fluxes due to currents in Zig and Zag winding on the same limb of transformer cancel each other and results in minimum saturation. Cl 2.0 (iii) has been added to reflect this comment.
Vector group of 11 / 0.433 kV Distribution Transformers (DTs) in Mumbai Discom is conventional Dyn11.

2.0 Scrutineers' Comment

In many countries (eg. Syria) Ynd11+YNd11, is a standard vector combination with NGTs connected to the MV grid on both ends. By changing Ynd11 to Ynzn11 the cost of 125 MVA transformer increases. Copper content in secondary winding goes up by 15.5 % (2/3-1/√3) and two secondary (Zig and Zag) windings are required. Will this increase in cost plus cost of extra neutral grounding reactor justify the saving of eliminating neutral grounding reactor? Why neutral grounding reactor is preferred instead of resistor in limiting ground fault current to 8 kA?

Author's Reply

With 220/33 kV, YNd11 connection, NGT (Zig Zag Neutral Grounding Transformer) is required to create earthing at 33 kV level. This requires elaborate arrangement as all the three phases at 33 kV have to be brought out through bus bar arrangement and NGT has to be connected to bus bars. With YNzn11 transformer, only a reactor is to be connected to Zig Zag neutral, which is a simple arrangement. The overall cost considering associated civil / structural works for YNzn11 connection with reactor is not too high.

Neutral Grounding Resistor is used when fault current is limited to, say 300A to 400A as in the case of 3.3, 6.6, 11 kV auxiliary buses of power plants. It is possible to design NGR enclosures for heat dissipation when fault current is limited to 400A. If the fault current is of the order of 8kA, only reactor grounding offers practically solution.

3.0 Scrutineers' Comment

It is well known that zero sequence impedance comes down with zig-zag connection. In fact one of the reasons for going for Zig Zag connection for secondary winding with primary star connected may be to eliminate stabilizing delta tertiary winding.(tertiary requires 33.33% of (copper area + turns) of primary winding while Zig Zag winding requires only 15.56 % extra copper.

Zero sequence measurement of transformers with interconnected windings(zig-zag) is made in a different way as explained in clause 9.5.5 General test method for zero sequence impedance measurement on transformers with interconnected windings - IEEE standard C57.12.90 - 2010 Test code for Transformers.

Apply three phase voltage to primary winding. Short only one phase of Zig Zag winding to neutral. Keep voltage source neutral ungrounded. Measure voltages and currents in primary and secondary side. Repeat measurement for other two phases. Calculate Z_0 for each phase as per below equation and zero sequence impedance shall be the average of the calculated zero sequence impedance for all phases.

$$Z_0\ (\%) = 300 \left\{ \left(\frac{Eav}{Er} \right) x \left(\frac{Ir}{I} \right) \right\} - \{2Z+3Z_N\}$$

Where Eav = Average of applied 3 phase measured voltages divided by transformer ratio

Er = Rated phase to neutral voltage of shorted winding

I = Measured current flowing in shorted phase

Ir = Rated current per phase of the shorted winding at the MVA rating

Z+ = % positive phase sequence impedance based on the MVA rating

Z_N = % neutral impedance based on the MVA rating (= 0 if no neutral impedance is used)

Author's Reply

The method we followed in Cl 3.0 is as per IEC 60076 Part 1. Major manufacturers also follow the same method when doing the test at works for zero sequence impedance measurement. Hence we also do the test at site in a similar manner.

We are thankful to the scrutineer for pointing out alternate method (IEEE method) for zero sequence impedance measurement. For site testing, voltage application from low voltage side (Zig Zag) is preferable as the test current values are higher and results in better accuracy. In the IEEE method, low voltage (e.g. 415V) is applied on HV side (e.g. 220 kV) with one phase of LV side (Zig Zag) shorted. The resulting current magnitudes are not substantial and hence measurement errors could be larger. However this method will also reconfirm that the zero sequence impedance of transformer with Zig Zag winding is much lower compared to positive (negative) sequence impedance.

ieema journal

Cable Sequence Impedance Measurement at site

Dr K Rajamani and Bina Mitra,

Reliance Infrastructure Ltd., MUMBAI

(August 2013, IEEMA Journal, Page 84 to 86)

Cable Sequence Impedance Measurement at site

Dr K Rajamani and Bina Mitra, Reliance Infrastructure Ltd., Mumbai

1.0 Introduction

Major urban distribution systems use underground cables. In case of overhead lines, any fault in the string insulator or equipment can be easily located as visual inspection is possible. In case of faults in cable, locating the fault is not that easy. The faulty section has to be isolated. A van containing cable fault locator equipment has to be sent to the local station. Pin pointing the fault may take a couple of hours. With the implementation of SCADA – DMS in Mumbai Distribution, another approach has been taken to locate the fault using analytics.

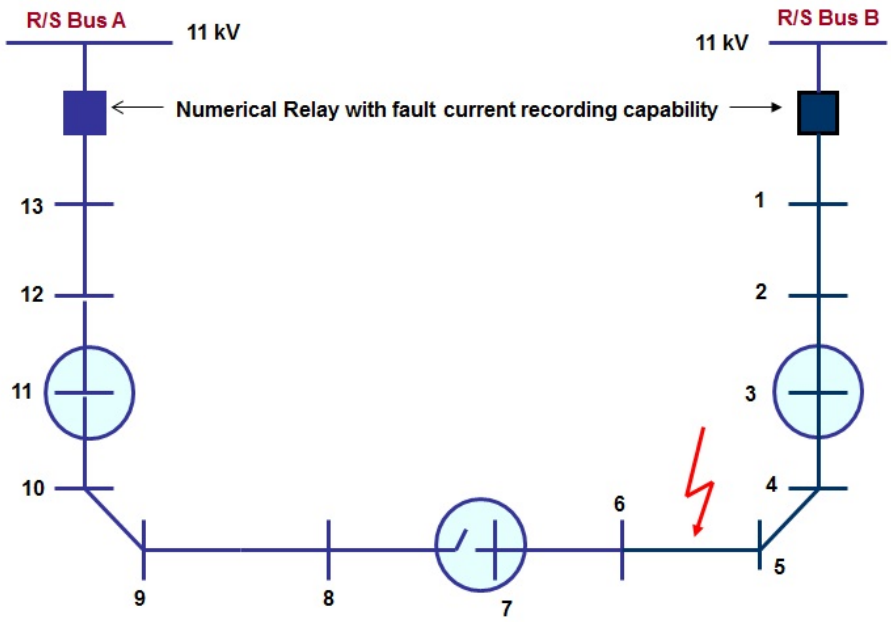

Fig 1

Refer Fig 1. 11 kV ring main connects two 33 / 11 kV Receiving Stations. The Ring Main starts from one Receiving Station and terminates on the same Receiving station or terminates on another Receiving Station. Typically the route length of Ring Main is from 5 to 10 KM. At every 1 to 2 KM, substations are located on the way. At Receiving Stations, numerical relays are provided for protection. The relays have the capability to register fault current values and transmit the values to Control Centre. At the Control Centre, special software is developed to determine fault location on 11 kV cables based on fault current values transmitted by protection relays. Depending on fault current values in each phase, type of fault (3 phase fault, L-L fault, L-G fault)

can be identified. The network is modeled for both positive and zero sequence. Using symmetrical components, fault currents at any point (usually every Substation) in the feeder for different type of faults can be worked out. Based on actual current registered by numerical relays, the software can identify the most probable location of fault (say between Substation 5 and 6 in Fig 1).

The initial finding after implementing the above is that fault localization (section identification) based on fault current values are 100% accurate for 3 phase faults. However, the success rate for phase to ground fault is only about 50%. It may be worth noting that, in case of three phase faults, only positive sequence impedance is involved. In case of ground faults, both positive and zero sequence impedances are involved. The results based on algorithm to identify fault location are very much influenced by sequence impedance data. The positive sequence data for cables are as per manufacturer's catalogue. The zero sequence impedance data are as per guidelines which may not be accurate for the situation at site. Hence to refine the model, tests were conducted at site to estimate the positive and zero sequence impedance data for 11 / 33 kV cables. The values from the tests values were then used in software rather than assumed values. With this, the success rate for correct fault location even in case of ground fault substantially rose above 90%. Since majority of faults (more than 70%) in practice are ground faults, the results of tests for sequence impedance measurement have real value addition in fault location.

This article explains the procedure adopted for measuring Positive, Negative and Zero sequence impedance of cable at site.

2.0 Procedure for sequence impedance data estimation

Select two substations for testing. It could be either two substations one after another or two substations with a number of intermediate substations. During testing, the complete testing path will be deenergised. System control may offer suitable sections for testing after considering LT back-feed so that during testing customer interruption is minimum.

2.1 Equipment required for testing

i) Shorting link rated for 200 A

ii) Current, Voltage and power factor measurement using PQ meter. In Mumbai Discom, Hioki make, PQ meter was used. The meter can also display the vector positions of voltages and currents. Refer Fig 2 for sample display. Once $V\angle\theta$ and $I\angle\Phi$ are known, impedance can found.

$Z \angle\delta = V\angle\theta / I\angle\Phi$.

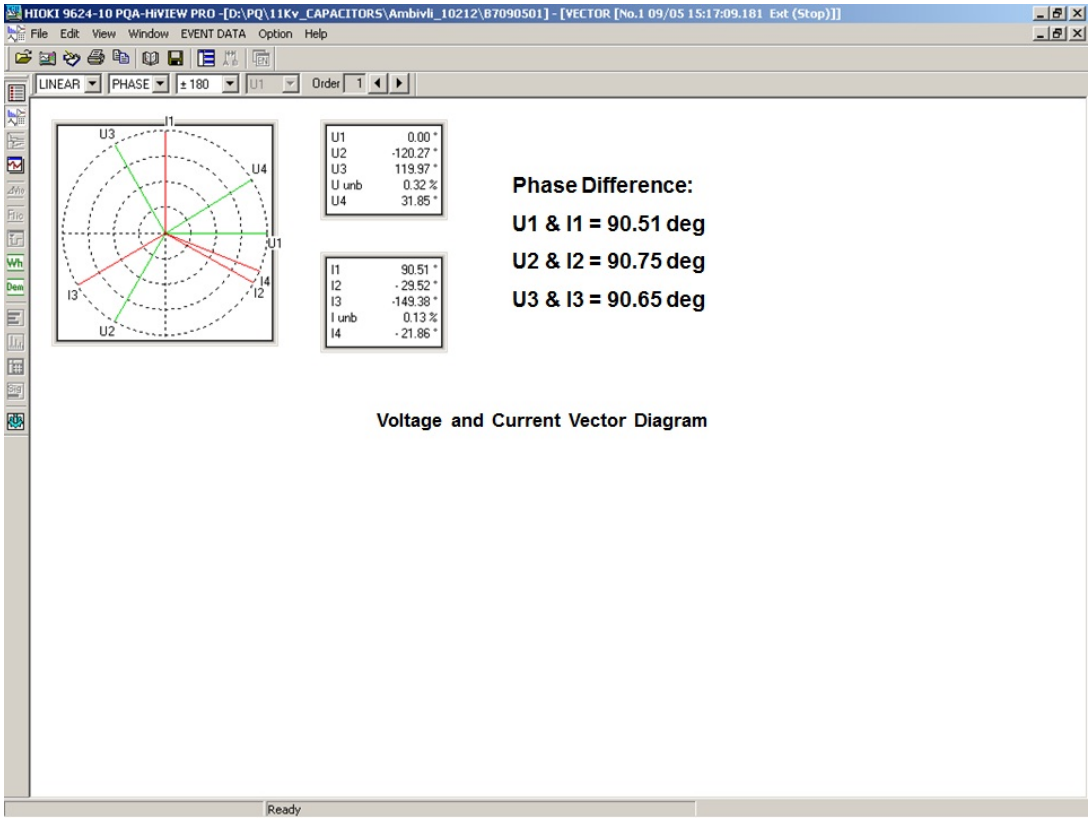

Fig 2

iii) For power supply 415, 200 A, TPN supply outlet is required. If 415V is directly applied to cable, current drawn will be excessive and the local source can not deliver this current. To reduce the voltage, two approaches are possible. If 11 / 0.433 kV Distribution Transformer is available, 415 V supply is given on 11 kV side to derive low voltage on secondary side of DT. Refer Fig 3.

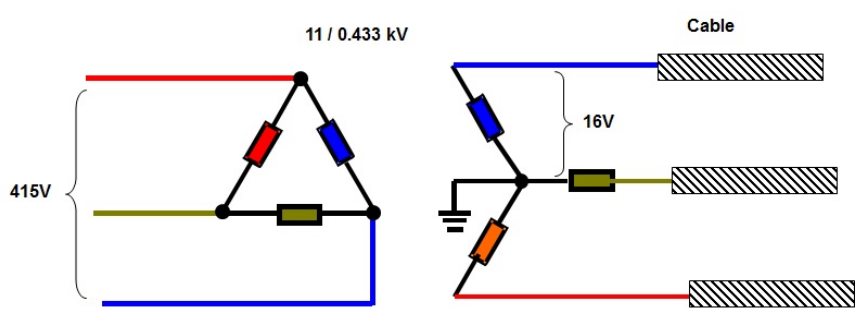

Fig 3

The second alternative is to use a 3Φ autotransformer to obtain lower voltage suitable for application to cable under test. Refer Fig 4.

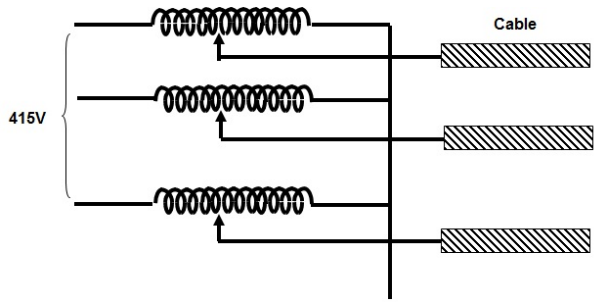

Fig 4

3.0 Sequence Impedance Testing

The testing is done on de-energized cable section between two Stations. Refer Fig 5. Based on three different tests, Positive, Negative and Zero Sequence impedances of cables are calculated.

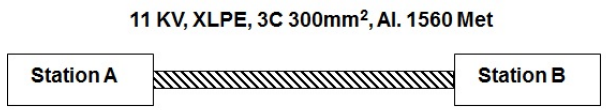

Fig 5

3.1 Test 1

Refer Fig 6 for connection diagram. Short circuit all three phases at Station B and connect it to Earth bus. Three phase voltage is applied from Station A. Measure voltage, current and power factor. Capture vector positions. Positive Sequence impedance is measured from this test.

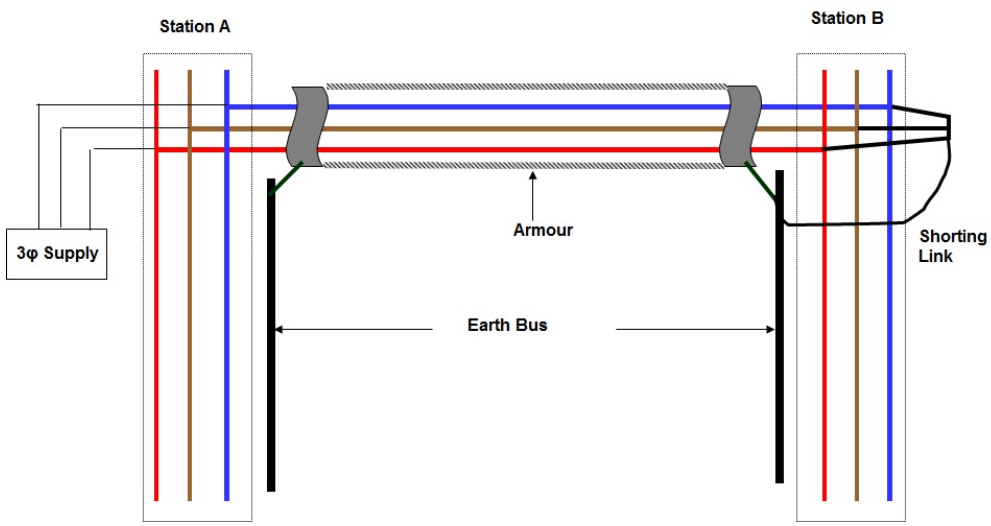

Fig 6

3.2 Test 2

Refer Fig 7 for connection diagram. Short two phases at Station B. Three phase voltage is applied from Station A. Measure voltage, current and power factor. Capture vector positions. From this test also, Positive Sequence impedance is measured.

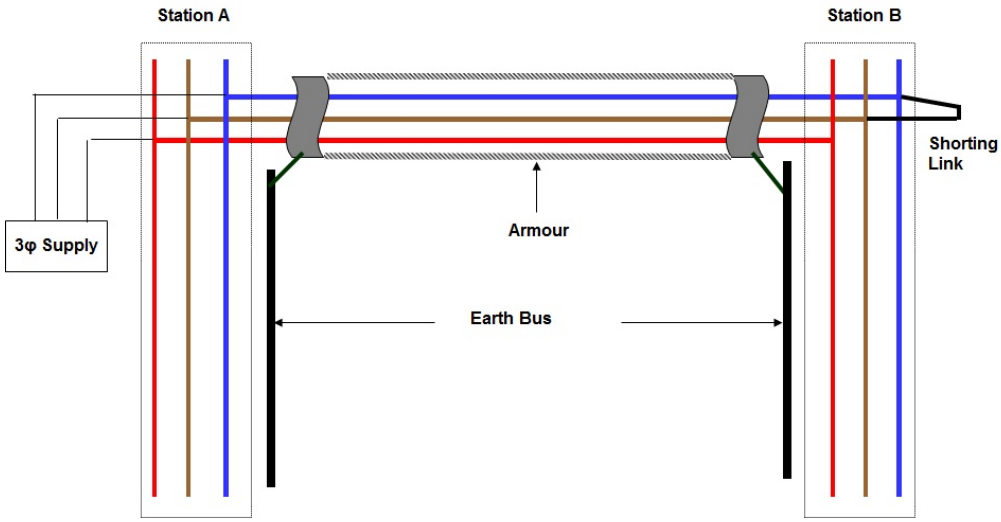

Fig 7

3.3 Test 3

Refer Fig 8 for connection diagram. Short circuit all three phases at Station B and connect the shorted terminal to Earth bus. Short circuit all three phases at Station A. Single phase voltage, between shorted terminal and earth bus, is applied from Station A. Measure voltage, current and power factor. Capture vector positions. Zero Sequence impedance is measured from this test.

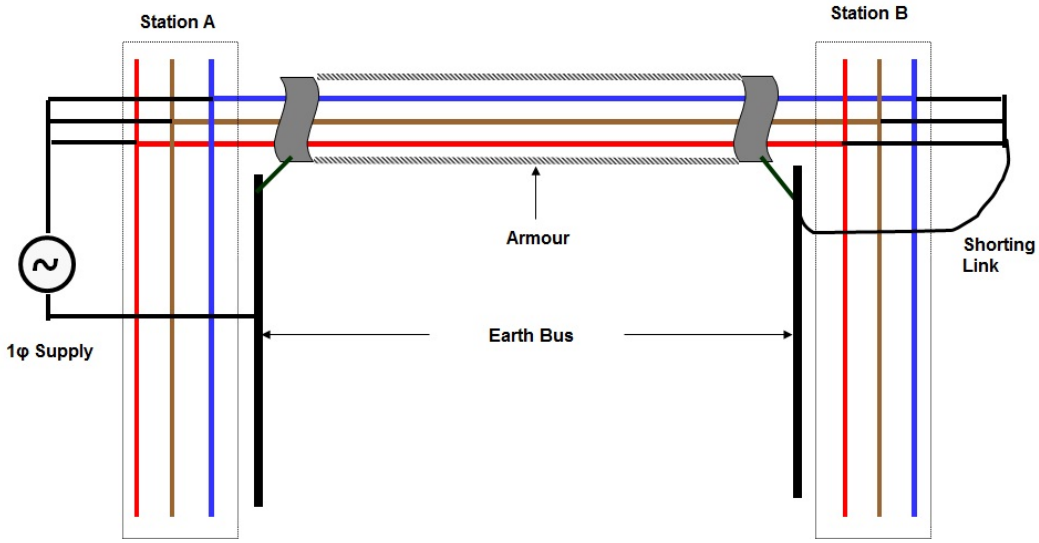

Fig 8

4.0 Test Results and Impedance Calculations

The cable section under test is shown in Fig 5. It is 3C x 300 mm^2 XLPE Al cable. Test results are shown in Table I.

Table I

Type of Fault	Voltage (V)			Current (A)		
	V_{RN}	V_{YN}	V_{BN}	I_R	I_Y	I_B
3L - G	7.69	6.67	7.00	29.98	29.18	27.32
L - L	8.84	7.15	7.71	-	24.63	23.73
(3L – G) 1Φ Supply	8.98	8.98	8.98	4.61	4.51	4.13

i) From results of (3L-G), Positive sequence impedance can be derived.

$Z_1 = V / I_F$

$V = 7.69\angle 0$

$I_F = 29.98\angle -39.76°$ *(PQ meter can display angle between two phasors).*

$Z_1 = 7.69\ \angle 0 / 29.98\angle -39.76°$

$= 0.197 + j\,0.164\ \Omega$

Cable length = 1.560 KM

$Z_1 = 0.126 + j\,0.105\ \Omega / KM$ **.....(1)**

ii) From results of (L-L) also, Positive sequence impedance can be derived. For static equipment like cable, $Z_1 = Z_2$.

Sequence network interconnection for (L-L) is shown in Fig 9.

$I_F = V / (Z_1 + Z_2)$

$= V / 2\,Z_1$

$Z_1 = V / 2I_F$

From results of (L-L) as obtained from PQ meter:

$V_{RN} = 8.84\angle 0°$; $V_{YN} = 7.15\angle -123.5°$;

$V_{BN} = 7.71\angle 128.18°$;

$I_R = 0$; $I_Y = -I_B = 24.63\angle 54.48°$;

$V_{BY} = V_{BN} - V_{YN}$

$= 12.047\angle 93.9°$;

$Z_1 = V / 2I_F$

$= (12.047\angle 93.9°) / (2 \times 24.63\ \angle 54.48°)$

$= 0.1889 + j\,0.155\ \Omega$

Cable length = 1.560 KM

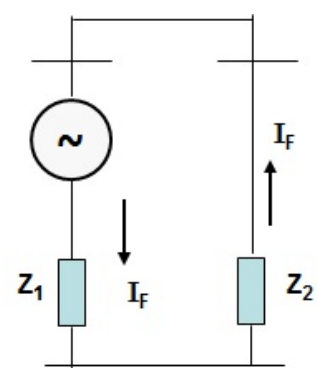

Fig 9

$Z_1 = 0.121 + j\,0.099\ \Omega / KM$ **……(2)**

Taking average of (1) & (2),

$Z_1 = 0.123 + j\,0.102\ \Omega / KM$

iii) From results of (3L-G) with single phase supply, Zero sequence impedance can be derived.

$V_0 = 8.98\angle 0$

$I_0 = 4.61\angle -20°$

$Z_0 = V_0 / I_0$

$= 1.831 + j\,0.666$

Cable length = 1.560 KM

$Z_0 = 1.173 + j\,0.427\ \Omega / KM$

5.0 Summary of Test Results

The tests were repeated for various types and sizes and results are tabulated below:

Table II

Cable Size	R_1 (Ω/KM)	X_1 (Ω/KM)	R_0 (Ω/KM)	X_0 (Ω/KM)	R_0/R_1	X_0/X_1
3C x 120 PILC, 11 kV	0.2445	0.0772	1.98	0.71	8.098	9.197
3C x 240 PILC, 11 kV	0.136	0.0833	1.186	0.707	8.721	8.487
3C x 300 XLPE,11 kV	0.123	0.102	1.173	0. 427	9.536	4.186
3C x 400 XLPE,33 kV	0.08	0.117	0.646	0.644	8.075	5.504

It can be seen that R_0 and X_0 are much higher than R_1 and X_1 and will have significant impact in ground fault current calculations.

6.0 Acknowledgement

We acknowledge the contributions of Avinash Gawde, Sachin Suryavanshi and Gopala Kannan of Mumbai Discom for making the set up and field measurements at site.

7.0 Conclusion

Fault location algorithms will give proper results only if correct cable impedances data are used. In this article, the measurement and analysis techniques for estimation of cable impedance are described. The information contained in this article will be useful to practicing engineers when implementing fault location algorithms.

ieema journal

Methods to Control Current during Testing of REF and Differential Schemes at site

Dr K Rajamani and Bina Mitra,

Reliance Infrastructure Ltd., MUMBAI

(September 2013, IEEMA Journal, Page 82 to 87)

Methods to Control Current during Testing of REF and Differential Schemes at site

Dr K Rajamani and Bina Mitra, Reliance Infrastructure Ltd., Mumbai

1.0 Introduction

Transformers are provided with differential and restricted earth fault (REF) protections depending on MVA and voltage ratings. As a part of commissioning tests, correctness of differential and REF schemes as wired in field is checked. Stability (should not pick up for through faults) and sensitivity (should pick up for internal faults) checks are done at site to ensure that differential and REF protection schemes do not mal-operate during external faults or starting of high rated motor or transformer switching. The schemes mal-operate because of loose current transformer (CT) wiring or wrong CT/ relay connections or wrong relay settings. The scheme testing at site is done by applying 415V on HV side of transformer with LV side of transformer shorted. For reliable scheme testing at site, with the practical limitations, the test current magnitude can be neither too high nor too low. This article covers the methods adopted to decrease or increase the test current as per transformer parameters.

2.0 Outline of Procedure

The outline of procedure covered in Ref [1] is summarized below for reference. The following broad steps cover the stability checks of differential and REF schemes of a transformer: Refer Fig. 1.

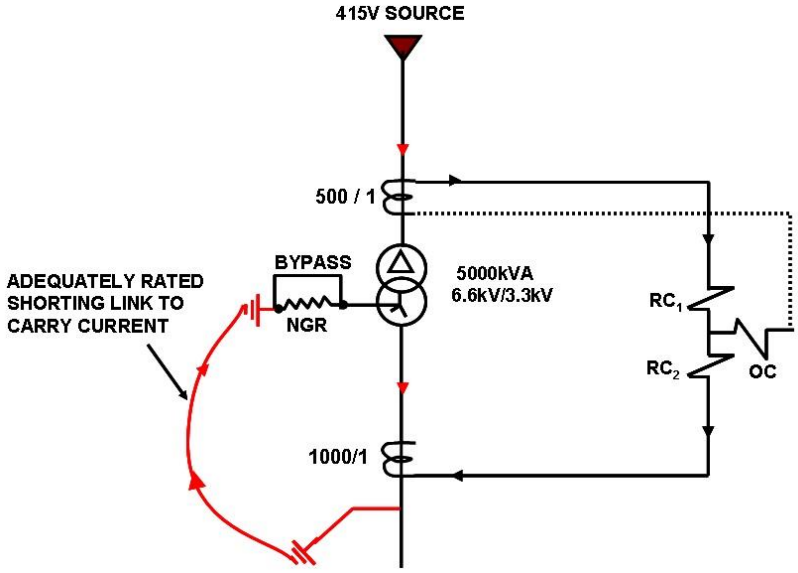

Fig 1 Test Setup for Stability Checks of Transformer

September 2013, IEEMA Journal, Page 82 to 87

(i) Disconnect the transformer from both the sides

(ii) Bypass NGR if present.

(iii) Keep the transformer at nominal tap.

(iv) Short stabilizing resistor for high impedance schemes.

(v) Create internal and external zone faults (three phase, line to ground and line to line) on LV side of transformer.

(vi) Apply three phase test voltage to HV side of transformer.

(vii) Measure during various faults simulated

(a) CT Primary and secondary currents

(b) Current through operating and restraining coil of the relay.

The testing engineer should be able to predict the magnitude of the expected currents during tests. He should also have an idea of the current distributions for the vector group of the transformer being tested.

3.0 Estimating currents during tests

As a first step, currents on HV and LV side of the transformer during tests are estimated. These are required to find out the size of shorting link and source requirements. Depending on transformer impedance, voltage rating and MVA rating the current during tests may be adequate, high or low for stability and sensitivity checks. If the calculated test current magnitude is high, the availability of local source to feed large current is doubtful. If the calculated test current magnitude is too less, measurement errors make the stability check results uncertain. In these cases external devices can be used to bring the test current within 'normal' range. Use of such external devices is discussed in subsequent sections with case studies.

3.1 Without external device, adequate current

As an example, consider 33/11 kV, 20 MVA transformer with impedance (Z) of 12%.

Full load current on 33 kV side, $I_{HV} = \dfrac{20000}{\left(\sqrt{3} x 33\right)}$

$= 350\ A.$

Full load current on 11 kV side, $I_{LV} = \dfrac{20000}{\left(\sqrt{3} x 11\right)}$

$= 1050\ A.$

The definition of impedance volts is that rated current will flow on HV and LV side when rated voltage x Z in % / 100 is applied on HV side with LV side shorted.

Impedance volts = 33 x 0.12

= 3.96 kV

As per the definition, if 3.96 kV is applied on 33 kV side with LV side shorted, rated current will flow on HV and LV side. Refer Fig. 2.

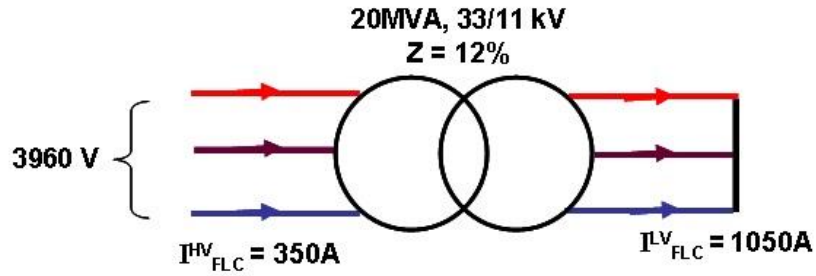

Fig 2 Concept of Impedance Volts

If all three phases of LV winding is shorted and 415 V test voltage is applied on HV side,

Current on 33kV side, $I_{HV}^{3\Phi} = \left(\frac{0.415}{3.96}\right) x\, 350$

$= 36.67\ A$

Current on 11kV side, $I_{LV}^{3\Phi} = \left(\frac{0.415}{3.96}\right) x 1050$

$= 110\ A$

The above current magnitudes are sufficient to test sensitivity and stability of protection schemes. Also current requirement from LV test source is less than 50A which can be easily met.

For Line to Line fault, LV side current is approximately, $I_{LV}^{2\Phi} = 0.866\ x\ I_{LV}^{3\Phi}$

$= 95\ A$

Line to ground fault current will be higher than three phase fault current for delta star transformers. For transformers with zigzag windings, the zero sequence impedance is much lower. The estimated line to ground fault current will be still higher. The current obtained during line to ground fault simulation is also an indicator of correct earthing connections within substation. The current during line to ground fault simulation could be very less than calculated value if firm metallic connection between switchgear earth bus and transformer neutral is not

established. Refer Fig.3. For reliable operation of earth fault relay operation it is essential that cable armours of incomer and outgoing are firmly bonded to switchgear earth bus and metallic connection exists from switchgear earth bus to transformer neutral / NGR. This ensures that from the faulted point to source neutral, the fault current returns through metallic path.

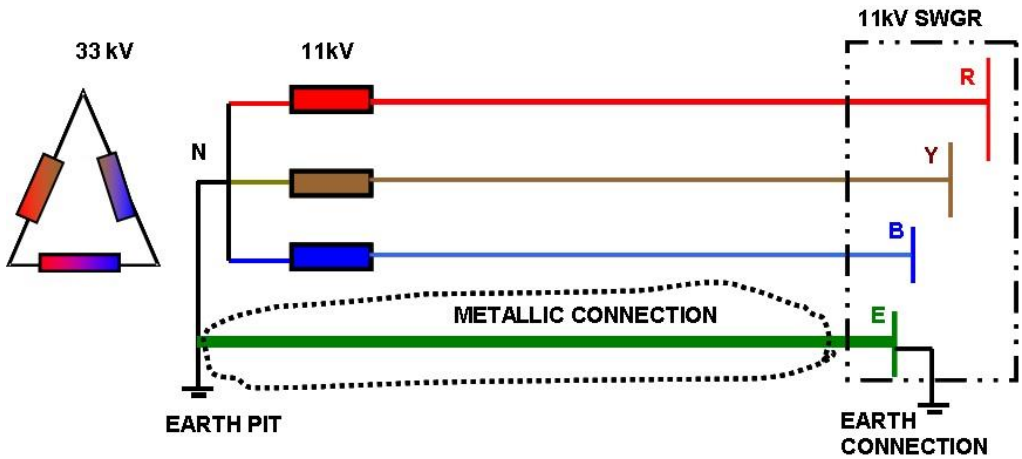

Fig 3 Metallic Connection between Transformer Neutral and Switchgear Earth Bus

3.2 Limiting the test current

The difficulty is illustrated in the following example.

Consider a 12.5MVA, 11/3.3kV (Dyn) transformer having 8.5% impedance.

Full load current on 11 kV side, $I_{HV} = \dfrac{12500}{\left(\sqrt{3}x11\right)}$

$= 656\ A$

Full load current on 3.3 kV side, $I_{LV} = \dfrac{12500}{\left(\sqrt{3}x3.3\right)}$

$= 2187\ A$

The above full load current will circulate when we short 3.3kV side and apply impedance volts of 935 V (= 11000 V x 0.085) on 11kV side.

For stability checks at field, 415V is applied to 11kV side with 3.3kV side shorted. The estimated current when 415V is applied:

$$I_{HV} = \left(\frac{415}{935}\right) x\, 656$$

$= 291\ A$

$$I_{LV} = \left(\frac{415}{935}\right) x\, 2187$$

$= 971\ A$

It is difficult to get LT source of 300A during commissioning at site.

The above situation is generally encountered in case of UAT (Unit Auxiliary Transformer) connected to generator terminal or 11/3.3 kV Auxiliary transformers used in large power plants.

The source requirement can be reduced by using a variac (to derive low voltage) or introducing impedance / resistor on LV side of the transformer.

3.2.1 Limiting the current using Variac

Typical rating of three phase variac: Input of 415V with (0 – 415V) variable output and maximum output current of 30A. In the above example, if 40 Volts is applied on HV side through variac during testing,

$$I_{HV} = \left(\frac{40}{935}\right) x\, 656$$

$= 28\ A$

$$I_{LV} = \left(\frac{40}{935}\right) x\, 2187$$

$= 94\ A$

Procurement of variac is not economically justifiable if it is used only for protection scheme testing of a few transformers once in one or two years. Also it has to be light weight for easy handling at site.

3.2.2 Limiting the current using External Impedance (Cable)

The source requirement can also be reduced by shorting LV side of the transformer with impedance. The impedance could be a cable which is available in plenty at site. Refer Fig. 4.

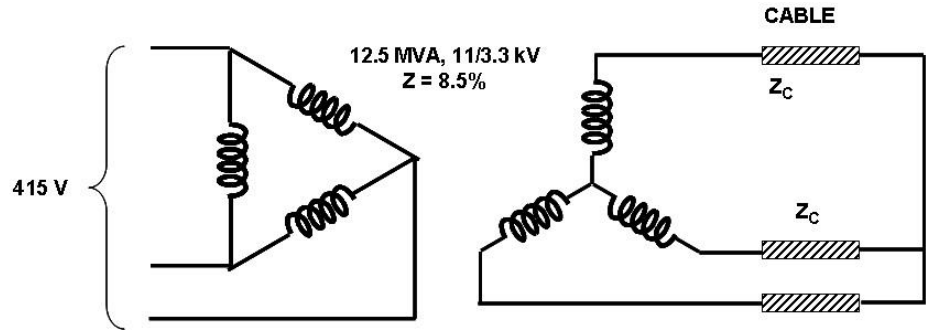

Fig 4 Use of Cable to reduce Source Current

Consider a 200m length of 10mm^2 aluminum cable is connected on the star side of the transformer.

The cable impedance is 3.7 + j0.091Ω / KM.

Transformer impedance (Z_T) = j0.085 pu on 12.5MVA base.

Cable impedance Z = 0.2 x (3.7 + j 0.091)

= 0.74 + j 0.0182 Ω

Base impedance on 3.3kV side $Z_B = \frac{3.3^2}{12.5}$

= 0.8712 Ω

Cable impedance (Z_C) $= \frac{Z}{Z_B}$

= 0.8494 + j 0.0209 pu on 12.5 MVA base

In subsequent paragraphs, the primary and secondary currents are calculated for three-phase fault, single-phase fault and phase - phase fault under modified stability test, with 200m piece of cable in each phase of 3.3kV star side.

3.2.2.1 Three phase fault

Total impedance $Z = Z_T + Z_C$

= 0.8494 + j0.1059 pu

$|Z| = 0.856$ *pu*

Applied voltage $V = \frac{0.415}{11}$

= 0.0377 pu

Three-phase fault current $I_{3\Phi} = \frac{V}{|Z|}$

$$= \frac{0.0377}{0.856}$$

$$= 0.044 \text{ pu}$$

Primary current $I_P = 0.044 \times 656$

$= 28.9$ A

Secondary current $I_S = 0.044 \times 2187$

$= 96.3$ A

Refer Fig 5 for current distribution.

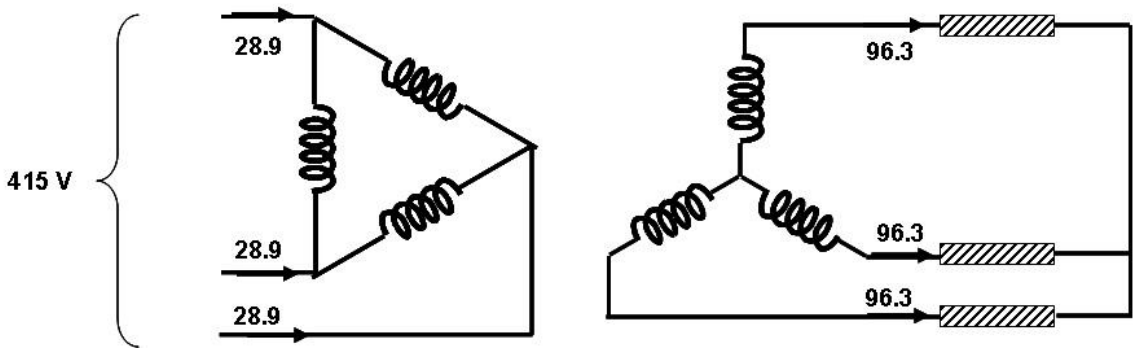

Fig 5 Current Distribution – 3Φ Fault

3.2.2.2 Single phase fault

From theory of symmetrical components,

Single phase fault current $I_{1\Phi} = \dfrac{3V}{(Z_{T1} + Z_{T2} + Z_{T0} + 3\,Z_C)}$

Assuming positive, negative and zero sequence impedances of transformer to be equal,

$Z = Z_{T1} + Z_{T2} + Z_{T0} + 3\,Z_C$

$= 3 \times (j0.085 + 0.8494 + j\,0.0209)$

$= 3 \times (0.8494 + j\,0.1059)$

$|Z| = 2.568$ pu

Single phase fault current $I_{1\Phi} = \dfrac{3V}{|Z|}$

$$= \frac{3 \times 0.0377}{2.568}$$

$$= 0.044 \text{ pu}$$

Secondary current $I_S = 0.044 \times 2187$

$= 96.3\ A$

Transformer Turn Ratio, $TTR = \dfrac{11}{\left(3.3/\sqrt{3}\right)}$

$= 5.77$

Primary current $I_P = \dfrac{96.3}{5.77}$

$= 16.7\ A$

A line to ground fault on star side appears as line to line fault on delta side. Refer Fig 6 for current distribution.

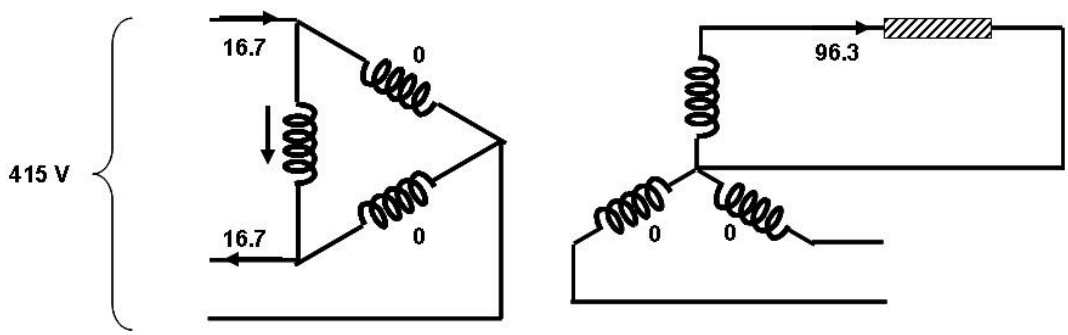

Fig 6 Current Distribution - 1φ Fault

3.2.2.3 Phase to phase fault

Positive sequence impedance at fault point (Z_{POS}) = $Z_T + Z_C$

Negative sequence impedance at fault point (Z_{NEG}) = $Z_T + Z_C$

Total Impedance $Z = 2 \times (Z_T + Z_C)$

$= 2 \times (j0.085 + 0.8494 + j\,0.0209)$

$= 2 \times (0.8494 + j\,0.1059)$

$|Z| = 1.712$ pu

Phase to phase fault current $I_{\Phi\text{-}\Phi} = \dfrac{\sqrt{3}\,V}{|Z|}$

$= \dfrac{\sqrt{3} \times 0.0377}{1.712}$

$= 0.0381$ pu

Secondary current $I_S = 0.0381 \times 2187$

$= 83.4\ A$

Primary current in winding $I_P = \frac{83.4}{TTR}$

$= \frac{83.4}{5.77}$

$= 14.5\ A$

Maximum primary line current = 29A

Ref Fig 7 for current distribution.

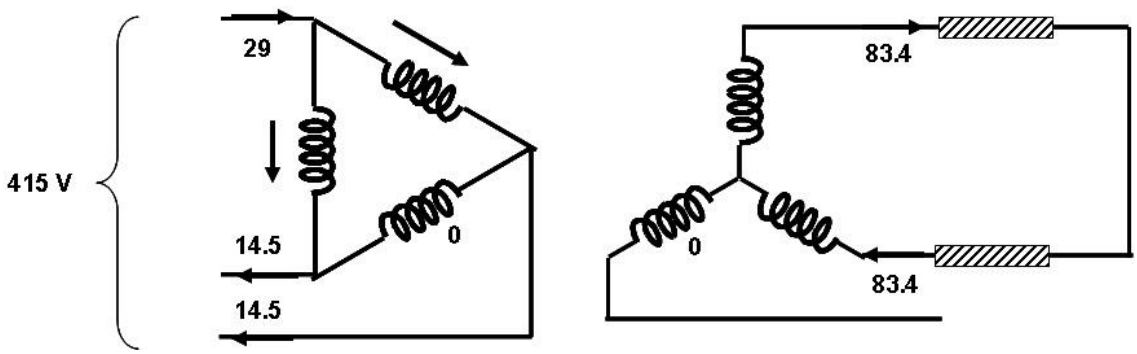

Fig 7 Current Distribution – Phase to Phase Fault

3.2.2.4 Summary

The maximum current drawn from source in all the cases is within 30A as in the case of Variac. This is achieved by using readily available cables in the plant. If required, the test current values can be increased by using shorter length of cables, if source can deliver higher current (say 63A or 100A). Higher the test current, higher is the reliability of through fault stability results. Voltage on secondary side is also low (415 x 3.3 / 11 = 125V) and safe to handle. This method is successfully used in scheme testing of UAT / Auxiliary Transformers in all recently engineered power plants of authors' company. In case of three phase fault simulation, if the short is created on transformer terminal, currents in all three phases will be almost equal. However in case cables are used to limit the current, currents in all three phases will not be exactly equal as the length of cable connected to each phase may vary depending on cut length. However this will not affect the results of through fault stability testing. A note of caution in this method of testing needs to be mentioned here. Before starting current injection, the test set up shall be complete in all respects. After starting current injection, current records shall be registered as quickly as possible and then the source

shall be disconnected. This is to ensure that current through cable is for a minimum time and within short time withstand capability of cable.

3.2.3 Limiting the current using External Resistor

The source requirement can be also be reduced by introducing resistor on LV side of the transformer. Typical specification for resistor is given below:

(i) Stainless steel grid type loading resistor in open execution.

(ii) Quantity: 3 Nos

(iii) Rated Voltage: 240V

(iv) Rated Resistance: 1Ω

(v) Taps: 0.25Ω, 0.5Ω, 0.75Ω, 1Ω [1 - 2; 1 – 3; 1 – 4; 1 – 5] Refer Fig 8.

(vi) Rated Current: 200A

(vii) Time Rating: 5 Minutes

(viii) The connectors suitable to receive upto 95mm^2 cable. The cable is to be connected directly to SS piece taken out as tap from grid.

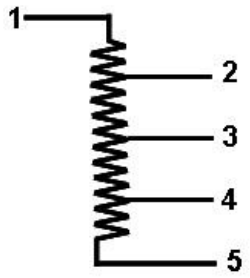

Fig 8 Loading Resistor

In case of independent testing agencies, either a variac discussed in Cl 3.2.1 or resistor given above can be a part of testing kit. At each site, the agency would like to finish testing at the earliest and move on to the next site. The frequency of usage will be much higher in case of testing agencies. Hence the cost of variac or resistor can be economically justified.

3.3 Increasing test current magnitude using capacitor

Another difficulty faced by testing engineers while testing protection schemes of EHV transformers is the low magnitude of test currents. The situation is reverse of what was described in previous sections. The rating of primary winding of CT is significantly higher than the rated current of transformer (especially for protection core). The resulting current on secondary side of CT during testing with 415V applied on HV side of transformer is many times too low, posing

problems during check for scheme stability. From safety point of view, it is not advisable to apply test voltage on LV side of transformer as voltage on HV side will be dangerously high during testing. One way to increase the current is to reduce the impedance presented to testing source. Since the object under test (transformer) is almost a reactance, it can be partly compensated by a capacitance in series.

3.3.1 Without capacitor, inadequate current

Consider, 220/33 kV, 125 MVA transformer with impedance of 15.3%.

Full load current on 220 kV side, $I_{HV} = \dfrac{125}{\left(\sqrt{3} x 220\right)}$

$= 328\ A.$

Full load current on 33 kV side, $I_{LV} = \dfrac{125}{\left(\sqrt{3} x 33\right)}$

$= 2187\ A.$

The above full load current will circulate when we short 33kV side and apply impedance volts 33.66kV (= 220 x 0.153) on 220kV side.

If 33kV winding is shorted and 415 V is applied on 220kV side,

Current on 220kV side = $\left(\dfrac{0.415}{33.66}\right) x\ 328$

$= 4\ A$

Current on 33kV side = $\left(\dfrac{220}{33}\right) x\ 4$

$= 27\ A$

The current on HV side is comparable to almost no load current of transformer. The above current magnitudes are relatively very low compared to rated current and reliability of scheme testing consequently suffers.

3.3.2 With series capacitor, Stage 1

One method to increase the injected current magnitude with applied voltage of 415 Volts is to introduce a capacitor in series with transformer during testing. Refer Fig 9.

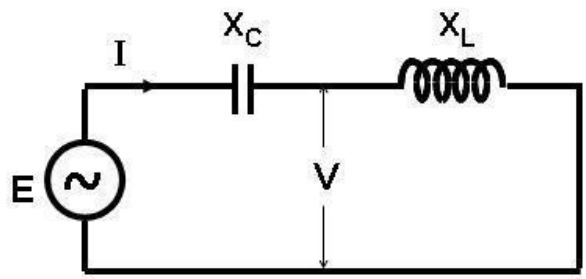

Fig 9 Use of Capacitor to increase Test Current

Base Impedance = $\frac{220^2}{125}$

= 387.2 Ω

Leakage Impedance , X_L = 0.153 x 387.2

= 59.24 Ω / phase.

Consider a capacitor of 150μF is connected in series with transformer during testing.

Capacitive reactance per phase, $X_C = \frac{1}{2\pi fC}$

= 21.22 Ω

Test Voltage , $E = \frac{415}{\sqrt{3}}$

= 240 V per phase

The resulting phase current on HV side = $\frac{E}{(X_L - X_C)}$

= 6.3 A

Voltage $V = I \times X_L$

= 6.3 x 59.24

= 373 Volts

$= E + IX_C$

= 240 + 6.3 x 21.22

= 373 Volts

This current is 160% of that without series capacitor. One way to interpret is that the increased current is obtained as the impressed voltage on transformer is 373

Volts instead of 240 Volts per phase. The increase in current with one capacitor is not substantial.

3.3.3 With series capacitor, Stage 2

To increase the injected current magnitude still further, another capacitor of 100μF is connected in series. Refer Fig 10.

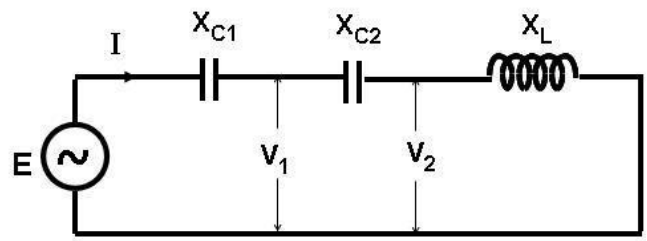

Fig 10 Two Capacitors in series

C_1 = 150μF; C_2 = 100μF;

Capacitive reactance per phase , $X_{C1} = \dfrac{1}{2\pi f C_1}$

$= 21.22\ \Omega$

Capacitive reactance per phase, $X_{C2} = \dfrac{1}{2\pi f C_2}$

$= 31.83\ \Omega$

Total Capacitive reactance per phase, $X_C = X_{C1} + X_{C2}$

$= 53.05\ \Omega$

Test Voltage , $E = \dfrac{415}{\sqrt{3}}$

$= 240$ *V per phase*

The resulting phase current on HV side $= \dfrac{E}{(X_L - X_C)}$

$= 38.7$ *A*

Voltage $V_2 = IX_L = 38.7 \times 59.24$

$= 2293$ *Volts*

Also, $V_2 = E + I\,(X_{C1} + X_{C2})$

$= 240 + 38.7 \times 53.05$

$= 2293$ *Volts*

Voltage $V_1 = E + IX_{C1}$

= 240 + 38.7 x 21.22

= 1061 Volts

The current with both capacitors (39A) is almost 10 times the current without series capacitor (4A). One way to interpret is that the increased current is obtained as the impressed voltage on transformer is 2293 Volts instead of 240 Volts per phase.

In Reliance Mumbai Transmission Division, the tests were conducted successfully. The sample screen shots taken during testing are shown in Fig 11 and Fig 12. The current values registered in Fig 11 closely matched with calculated values.

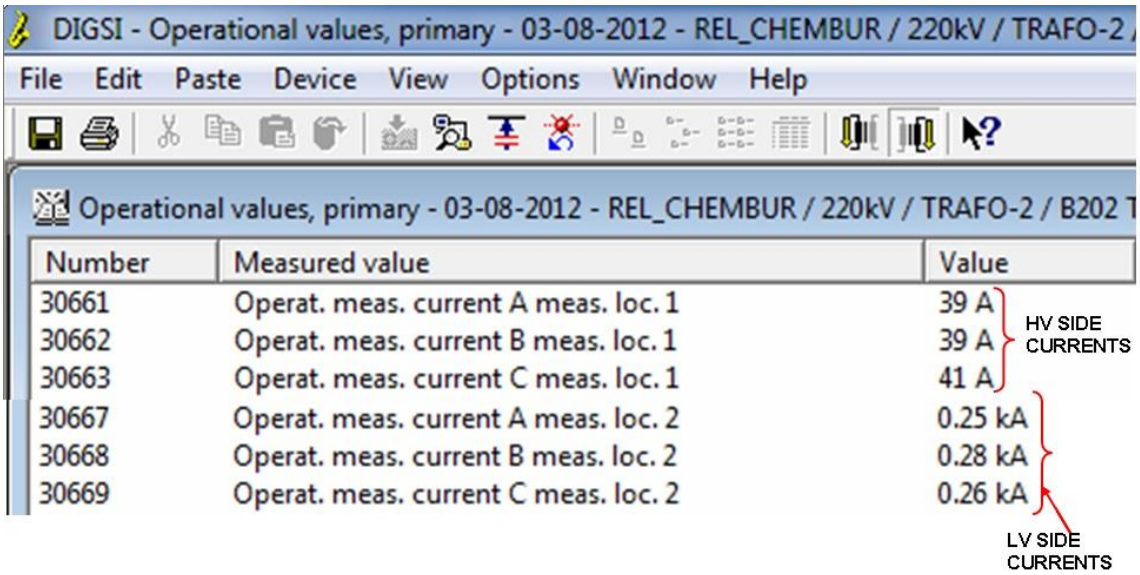

Fig 11 Screen Shot - Three Phase Fault Simulation

In Fig 12 current distribution for line to ground fault is given. As expected, line to ground fault on secondary side gets reflected as line to line fault on primary side for Yzn11 transformer.

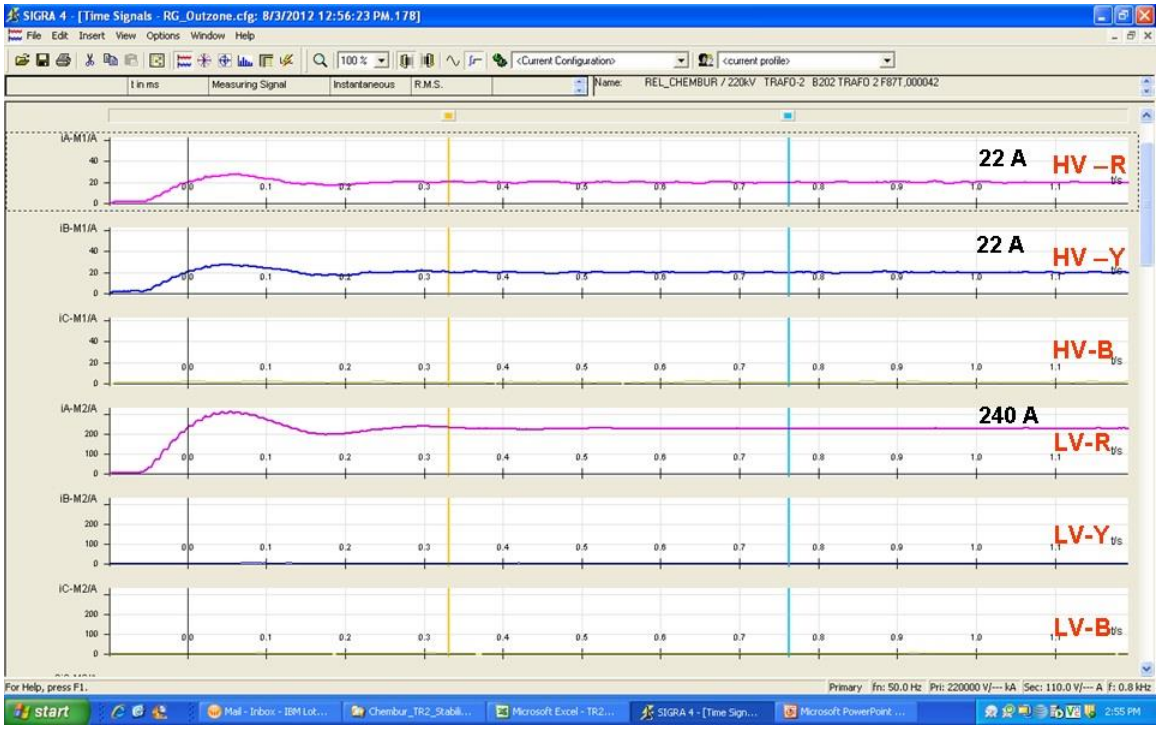

Fig 12 Screen Shot – Line to Ground Fault Simulation

Since the test current magnitude is substantial, testing engineers are now more confident of through fault stability of REF and Differential schemes. This procedure using capacitors has been standardized for scheme testing of EHV transformers in Mumbai Transmission Division.

3.3.4 Chances of Series Resonance and Current shoot up

The capacitor value is so chosen that it does not fully compensate for leakage reactance of transformer. This is to avoid tending towards series resonance condition. Also it must be emphasized that even if capacitive reactance is close to transformer reactance, the resulting current will not be very large (theoretically infinite) as the current will be limited by resistance of transformer winding which has been ignored till now in our calculations. In the case of transformer under discussion, following winding resistance values were obtained from shop test results:

$R_{HV} = 0.3782\ \Omega$ / *phase*

$R_{LV} = 7.0338\ m\Omega$ / *phase*

Equivalent resistance as viewed from HV side:

$$R_{EQ} = 0.3782 + [7.0338 \times 10^{-3} \times \left(\frac{220}{33}\right)^2]$$

$$= 0.6908\Omega / phase$$

Resulting current even assuming $X_L = X_C$

$$I = \frac{240}{0.6908}$$

$$= 347A$$

This current is not excessively high compared to winding rated current (328A). Of course, the source may not have capacity to deliver this current and the protective device at source end will trip in case of this eventuality.

The above situation of resonance has never been encountered in the tests we have conducted at site so far. Any threat due to series resonance is practically nil if capacitors are properly sized.

3.3.5 Precautions

(i) While adopting the test procedure for the first time, it is prudent to carry out the tests in two steps. It is suggested to procure two capacitors. In stage 1, use only one capacitor and observe the increase in current. If all observations are satisfactory, proceed with stage 2, in which both capacitors will be connected in series.

(ii) For test leads, use HV test leads of reputed make (In Mumbai Transmission, leads from M/S Mittal Electronics were used). These are used for connection of source, capacitors 1 and 2 and transformer.

(iii) Primary current measurement using clamps shall be done on the section between source and first capacitor. The voltage on this section will be only source voltage (415 V). Refer Fig 13.

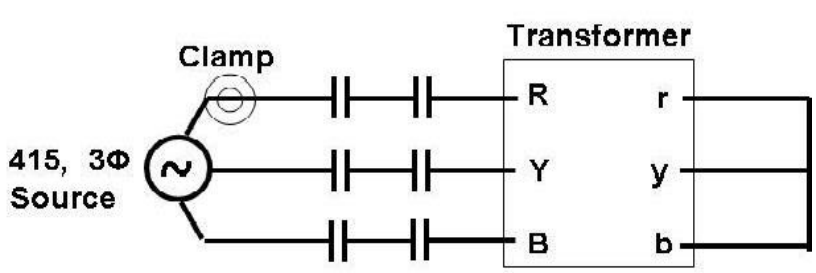

Fig 13 Primary Current Measurement

4.0 Acknowledgement

Manoj Mishra carried out the first scheme testing using cables at Hissar site. Regarding capacitor application, we are deeply indebted to Dr Venkatesh of Epcos who readily agreed to design and deliver capacitors as per our requirement. Mohan Waingankar, Dilip Devasthale and Mahesh Ambardekar of Reliance Mumbai Transmission Division were instrumental in carrying out the stability test at site on EHV transformers with capacitors.

5.0 Conclusion

With the methods discussed in this article field engineer can either limit the test current to suit the available source capacity or increase the test current to realize more reliable scheme testing.

6.0 References

[1] "Restricted Earth fault Protection Practices", K Rajamani. IEEMA Journal, January 2006, pp 92 – 95.

ieema journal

Protection for Low Voltage Auxiliary Transformer and Switchgear

Dr K Rajamani and Bina Mitra,

Reliance Infrastructure Ltd., MUMBAI

(December 2013, IEEMA Journal, Page 114 to 120)

Protection for Low Voltage Auxiliary Transformer and Switchgear

Dr K Rajamani and Bina Mitra, Reliance Infrastructure Ltd., Mumbai

1.0 Introduction

Auxiliary transformers in power plants and distribution systems are used to supply power to LV loads. The secondary voltage of LV transformer is 433V and the primary voltage is 11 / 6.6 / 3.3kV. The vector group is Delta – star. The star side is solidly grounded. The transformer is connected to three phase four wire (TPN) Power Control Centre (PCC) or Power cum Motor Control Centre (PMCC). This article discusses protections provided for LV transformer and switchgear. The reasons for mal-operation of conventional Restricted Earth Fault (REF) protection and Standby Earth Fault (SEF) protection schemes in LV system are given followed by methods to overcome them. The concept of Reverse Blocking Scheme (RBS) is introduced. Factors to be considered for successful implementation of RBS in LV system are brought out. 'Pseudo REF' scheme, an elegant extension of Reverse Blocking Scheme is introduced. The article concludes with practical suggestions for implementing RBS and Pseudo REF scheme to improve security of the scheme.

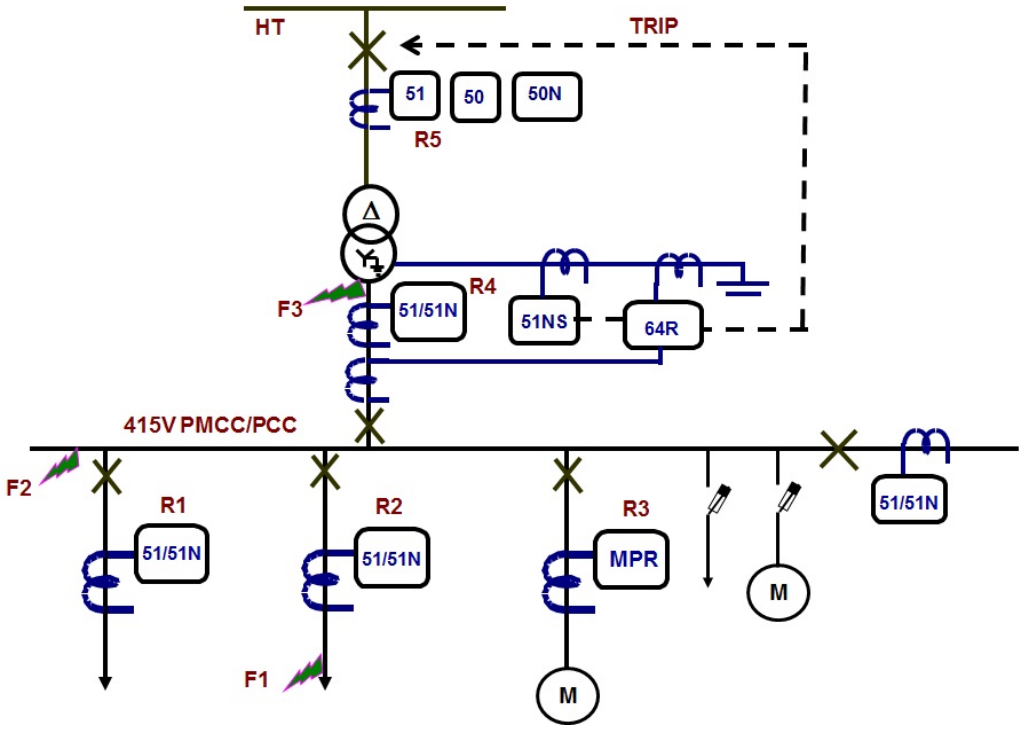

Fig 1 Protections for Low Voltage system

December 2013, IEEMA Journal, Page 114 to 120

2.0 LV System Protections

Typically a 415V PMCC/PCC will have the following:

i) Outgoing line feeders controlled by breaker or fuse.

ii) Outgoing motor feeders controlled by breaker or fuse.

iii) Incomer from LV auxiliary transformer controlled by breaker.

The standard protections provided on switchgear are shown in Fig 1.

2.1 LV Auxiliary Transformer

2.1.1 HV side (provided on HT switchgear) – Relay R5 (Refer Fig 1)

i) Instantaneous phase over current protection (50) – This protection clears any phase fault on HV side instantaneously. The pickup level is set above the reflected LV side fault current value. Therefore it is insensitive to LV side phase faults.

ii) IDMT phase over current protection (51) – It is a time delayed protection and acts as backup to any uncleared fault on LV and HV side.

iii) Instantaneous earth fault protection (50N) – This protection is provided to clear any earth fault on HV side instantaneously. Due to delta-star vector group of the auxiliary transformer, LV side earth fault is reflected as phase to phase fault on HV side. Refer Fig. 2.

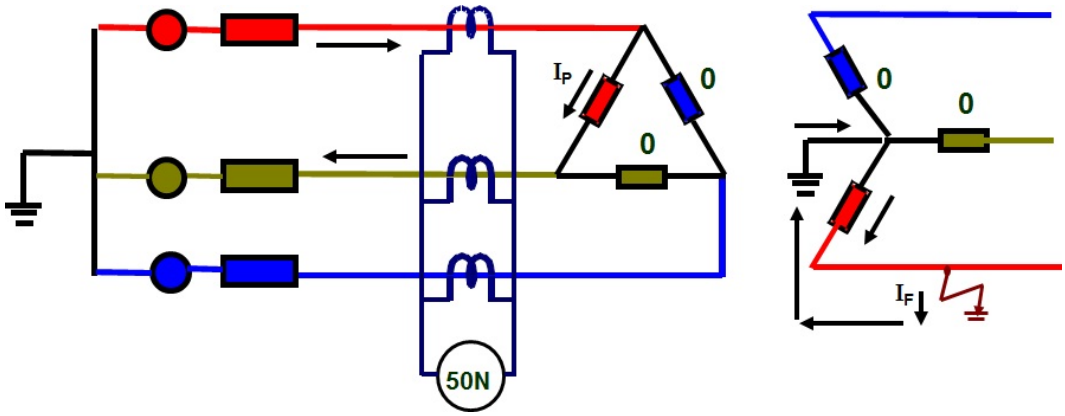

Fig 2 Instantaneous Earth Fault Protection (50N)

Thus, LV side earth fault is isolated by delta winding and this protection is insensitive to LV side earth fault. It can be termed as “Restricted Earth Fault protection (REF) for HV side”.

2.1.2 LV side (provided on LV switchgear) – Relay R4 (Refer Fig 1)

i) IDMT phase over current and earth fault protection (51/51N)

This time delayed protection provided on LV breaker provides backup to outgoing feeder protection (Fault F1) and clears fault on 415V bus (Fault F2).

ii) Restricted earth fault (REF) protection (64R) – It is a unit protection for fast fault clearance of faults in star winding of transformer and any fault between transformer and breaker (Fault F3). This protection does not see any faults on outgoing feeders or 415V bus (Fault F1, F2). This protection trips HV breaker to clear a fault. Refer Fig.1. REF schemes are covered in detail in Ref [1].

iii) Standby earth fault protection (51NS) – Covered in Cl 3.0.

2.2 Breaker controlled outgoing line feeders - Relay R1, R2 (Refer Fig 1)

IDMT phase over current and earth fault protection (51/51N). This is time delayed protection provided to clear short circuit and earth fault on outgoing feeder.

2.3 Fuse controlled outgoing line feeders

Fuse provides short circuit protection. Due to high magnitude of earth fault current, the fuse provides earth fault protection as well.

2.4 Breaker controlled motor feeders - Relay R3 (Refer Fig 1)

Composite motor protection relay is provided with following protection elements

i) Instantaneous phase over current protection (50) for short circuit protection.

ii) Instantaneous earth fault protection (50N) to clear earth fault.

iii) Locked rotor protection (50LR) against locked rotor conditions.

iv) Negative sequence protection (46) to protect against unbalance.

v) Overload protection (49) to protect against overloads.

2.5 Fuse controlled motor feeders

Fuse provides short circuit protection and thermal overload relay protects motor against overloads. Due to high magnitude of earth fault current, the fuse provides earth fault protection also.

2.6 Fuse vs Circuit Breaker

Fuse has dominated as short circuit protection device in LV systems due to its excellent current limiting property. Circuit breaker with current limiting feature is being introduced as a substitute for switch-fuse unit by some users. However the final choice between fuse and circuit breaker is based on techno-commercial considerations.

3.0 Standby Earth Fault protection

It is provided to clear any uncleared downstream earth fault (Faults F1, F2), fault between transformer and LV breaker (Fault F3) and star winding faults. This

protection (51NS) trips HV breaker to clear a fault. Refer Fig.1. Standby earth fault protection also acts as a backup to REF protection. Since LV system is solidly grounded, sensitivity for faults very near to neutral of star winding of transformer is not a concern.

It is time delayed to coordinate with downstream relays. Hence, any fault between transformer and breaker and star winding faults are also cleared with delay. A typical earth fault coordination chart for 415V system is shown in Fig 3. As seen the standby earth fault protection will clear any earth fault in 1.1 sec.

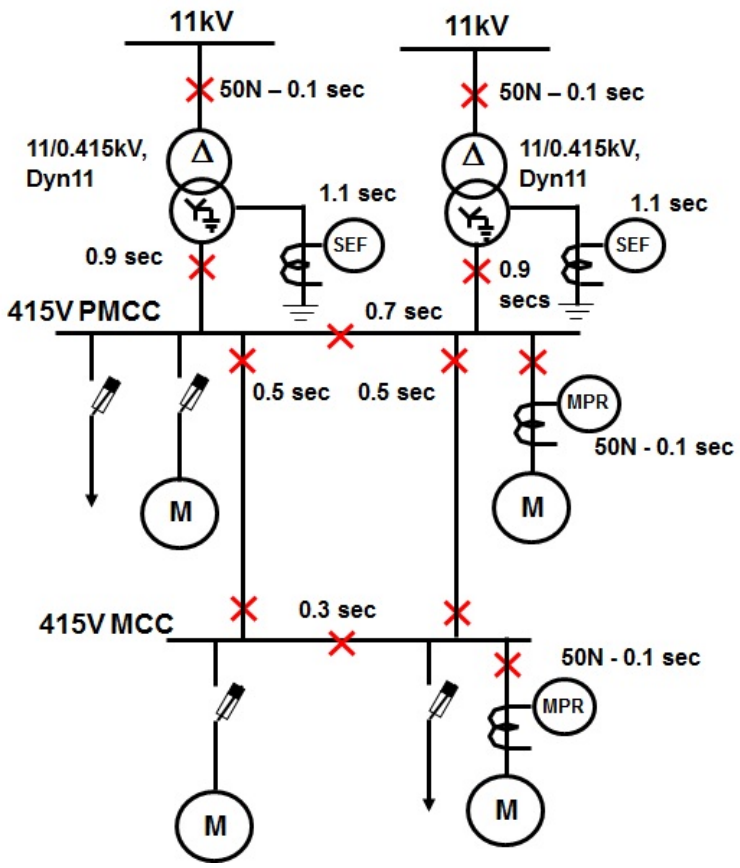

Fig 3 Typical Relay Co-ordination for Earth Fault

4.0 Location of neutral CT

In Ref [1], the importance of correct positioning of Neutral CT (NCT) for REF protection scheme has been emphasized. In case of REF protection in TPN system (with three pole + neutral link breakers), selection of 4 CT or 5 CT REF scheme vis a vis location of NCT has to be correctly considered during design stage. If it is not taken care at design stage it leads to inadvertent tripping at site.

When NCT is located *before* bifurcation point 'X', 4 CT REF scheme works correctly in TPN system. Refer Fig 4. For outzone fault, the current circulates between phase CT and NCT and there is no current (theoretically) through relay branch.

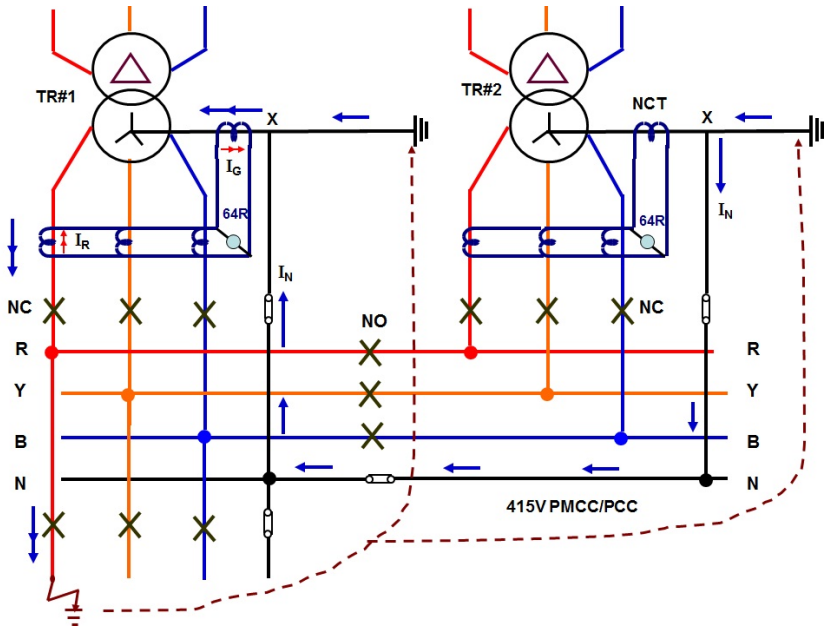

Fig 4 REF 4CT Scheme

4.1 When NCT is located *after* bifurcation point 'X', 5 CT REF scheme works correctly in TPN system. Refer Fig 5.

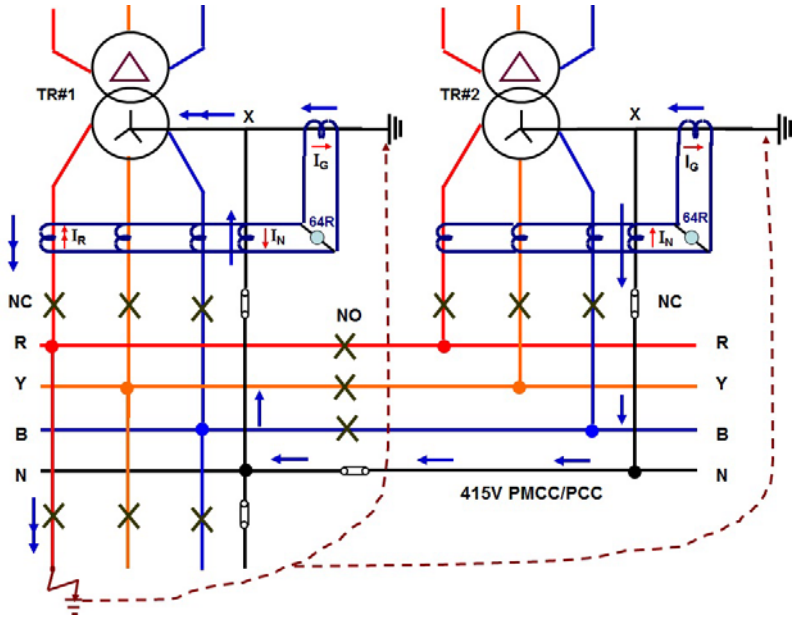

Fig 5 REF 5 CT Scheme

For outzone fault, the current circulates among phase side CTs and NCT and there is no current (theoretically) through relay branch.

4.2 In one of the projects sites in author's company, 5CT scheme was provided with neutral CT located before bifurcation point 'X'. Refer Fig.6 Inadvertent tripping of REF scheme was observed for out-zone faults. It can be seen from current distribution that current through CT4 will force the current through relay branch (64R) and will lead to tripping of both the transformers. The problem was resolved after removing CT4 from the scheme and shorting it. In effect, 5CT scheme was converted to 4CT scheme.

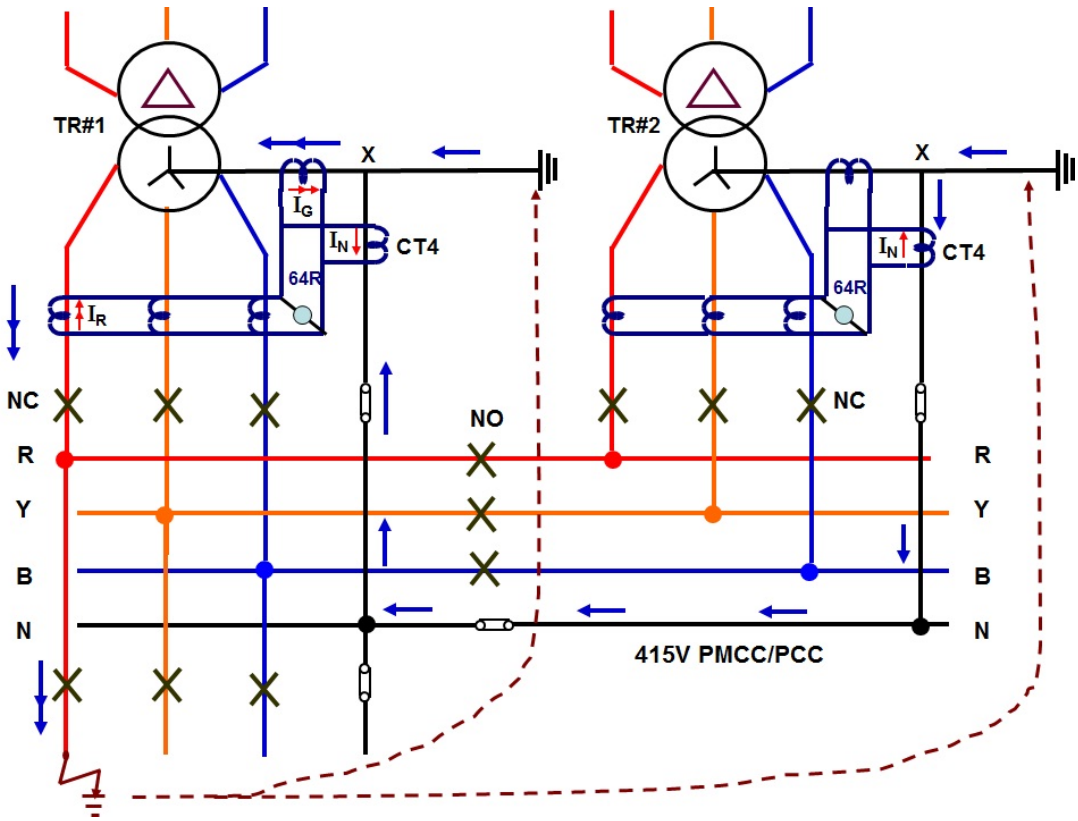

Fig 6 REF 5CT Wrong Scheme

4.3 Consideration of NCT position is applicable for correct operation of Standby Earth Fault (SEF) protection also. In a TPN system (with three pole + neutral link breakers), it is mandatory to locate the NCT before bifurcation point (X) for standby earth fault protection. Refer Fig. 7, where the NCT is located after bifurcation point (X). Consider an outgoing feeder fault fed from Transformer TR#1 with bus coupler open. In this case for the uncleared fault only relay R1 should operate.

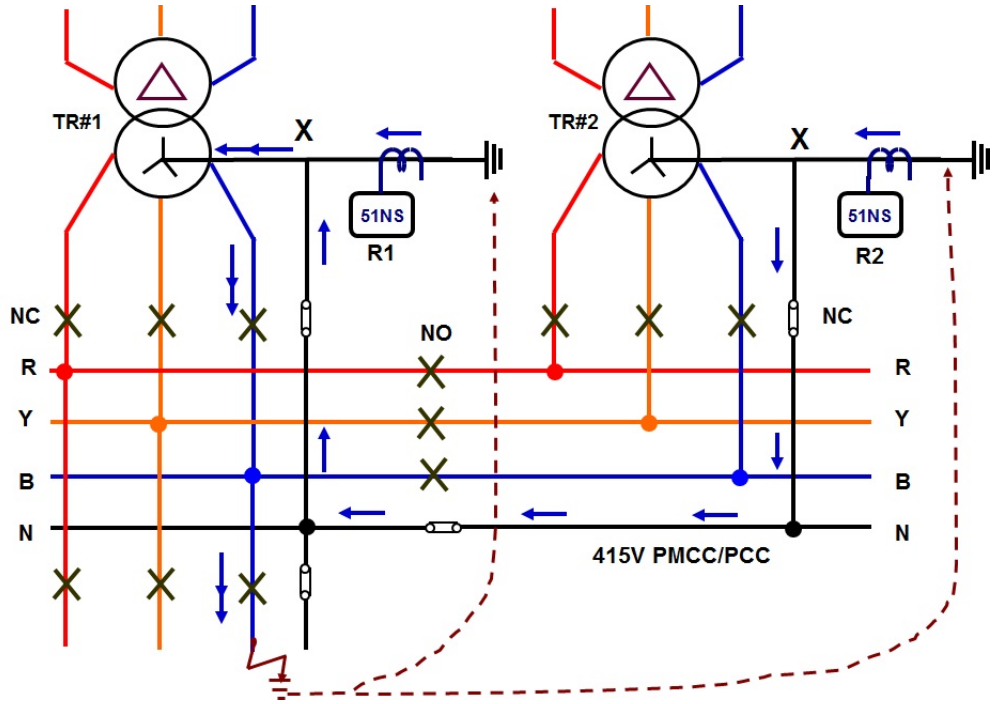

Fig 7 SEF Protection Scheme

As seen from Fig 7, relay R2 on neutral of second transformer TR#2 also picks up. Tripping of TR#2 is unwarranted. This can be avoided by locating NCT in neutral bushing of transformer i.e., before bifurcation point (X). Refer Fig. 8 for fault current distribution. Standby earth fault relay of second transformer (relay R2) does not see the current when NCT is located before bifurcation.

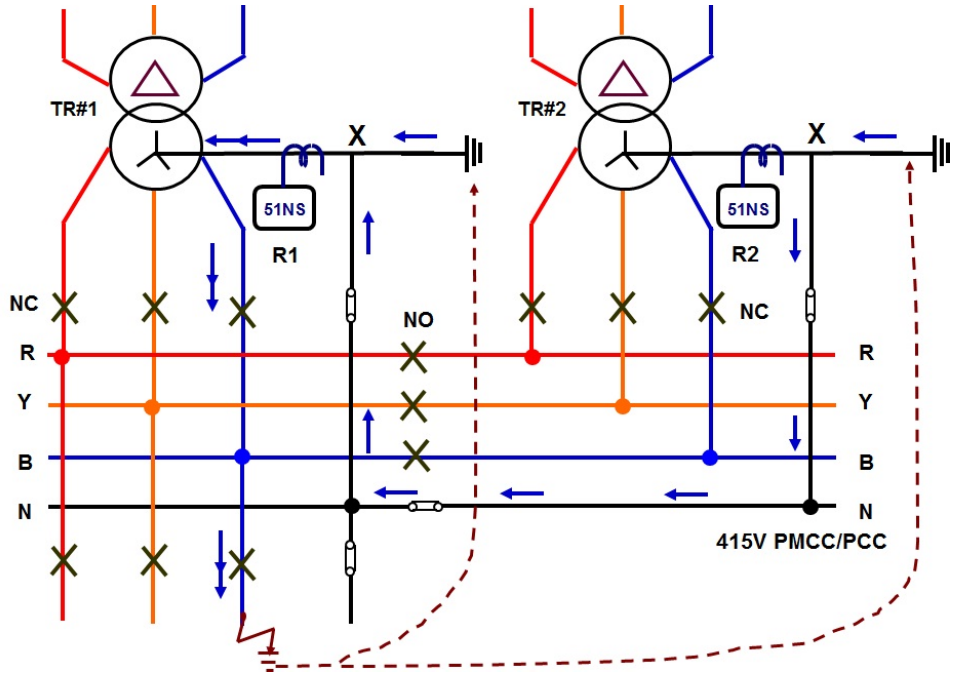

Fig 8 SEF Protection Scheme

4.4 When both standby and restricted earth fault protection have to be provided for LV auxiliary transformers care has to be exercised in locating the NCTs. Due to physical constraints two NCTs cannot be located in neutral bushing. NCT for SEF has to be located before bifurcation. NCT for REF is forced to be located after bifurcation. This necessitates, as per Cl 4.1, use of 5CT REF scheme. Refer Figure 9.

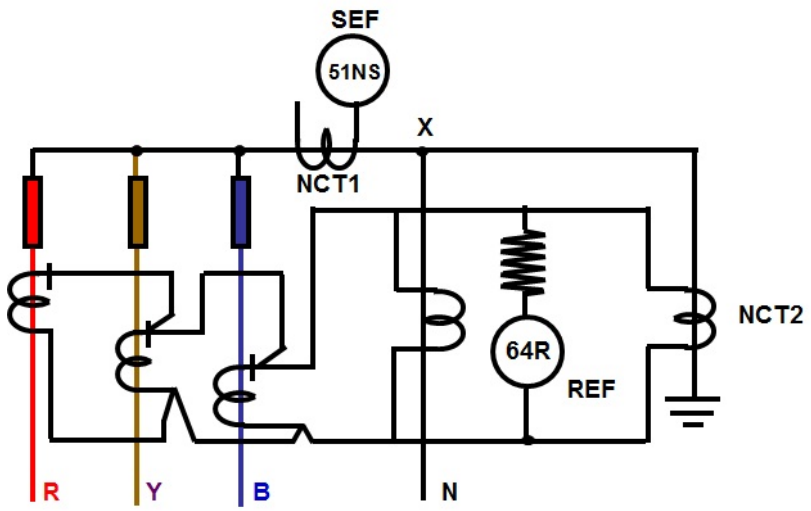

Fig 9 REF (5CT) and SEF Protection scheme

5.0 Choice of breaker for incomer and buscoupler

The above discussion assumes three pole breaker with neutral link. If 4 pole breaker is used, complete neutral isolation is achieved. It could prevent some of the inadvertent tripping mentioned above. However it does not allow free choice of NCT location (before or after bifurcation point). If the LT system has substantial neutral current flow due to unbalanced loading, 4CT REF scheme may mal-operate if NCT is located after bifurcation (Fig 6 of Ref [1]).

Following is recommended irrespective of breaker type (3 pole with neutral link or 4 pole):

i) NCT for SEF shall be part of transformer neutral bushing.

ii) Only 5CT REF scheme shall be adopted. NCT for REF shall be after bifurcation point.

6.0 Reverse Blocking Scheme (EHV and MV systems)

Refer Fig 1. In the conventional protection schemes, instantaneous element (50) can not be provided on incomer (Relay R4). If provided, the incomer will trip for any fault on outgoing feeder (say fault F1) resulting in bus outage. Hence time

delayed over-current element (51, 51N) is provided to coordinate with down stream relays.

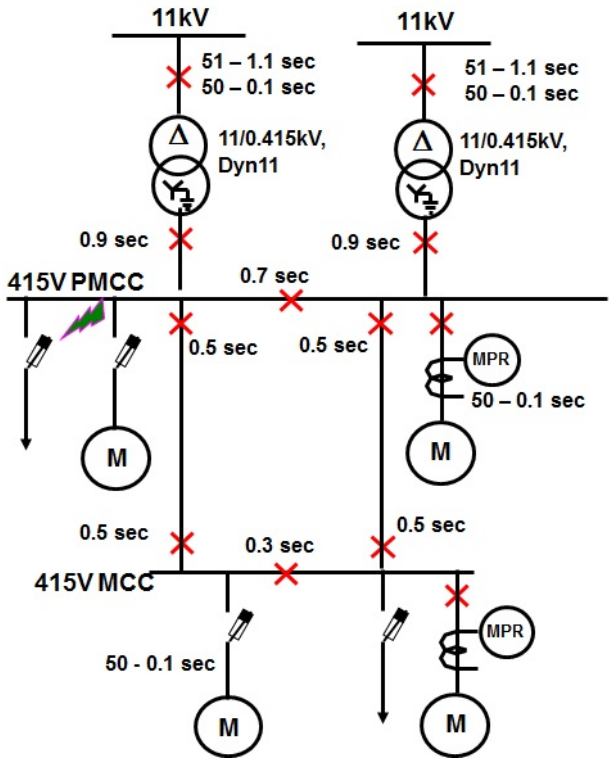

Fig 10 Typical Relay Co-ordination for Phase Fault

Refer Fig 3 (earth fault) and Fig 10 (phase fault) for typical relay coordination chart for LV system. As seen from the chart a bus fault on PMCC / PCC which are of very high magnitude is cleared with a higher time delay (0.9 sec). Separate Bus bar protection was the only option available earlier to clear bus faults very fast, at the same time maintaining through fault stability (will not trip for faults on outgoing feeders). Engineering bus bar protection involves lot of hardware like separate CT cores on all feeders, high speed bus bar protection relay, CT supervision, etc. Based on cost consideration and impact on system stability, dedicated busbar protection was used only in EHV switchyards. With the advent of Numerical Relays, the same objective (fast clearing of bus faults) can be achieved using Reverse Blocking Scheme (RBS). This has been made possible due to two important features available with Numerical Relays: (i) each relay element can have multiple settings and (ii) communicable. In RBS, the relay on incomer has two stages – instantaneous (typically set for 0.1 sec) and the other is conventional time delayed stage (51/51N - typically set for 0.9 sec). In RBS,

pickup contacts of relays on all outgoing feeders are paralleled and wired to incomer relay. This blocks operation of instantaneous stage of incomer relay for an outgoing feeder fault (i.e., when relay on outgoing feeder picks up). For a fault on bus the outgoing feeder relay does not pickup. The incomer relay does not receive blocking signal for instantaneous element and clears bus fault instantaneously. For implementation of RBS, the system shall be radial with prefixed configuration of incomer, bus coupler (if applicable) and outgoing feeders. In case of EHV switchyard, this is difficult to achieve as any feeder can be connected to any bus (Main 1, Main 2, Transfer Bus) through isolator selection and CT switching. Hence, RBS is not applied in EHV systems and only conventional dedicated bus bar protection scheme is employed. RBS is used widely in MV (33 kV, 11 kV, 6.6 kV and 3.3 kV) switchgears of both distribution systems and power plants. In distribution systems, incomer, bus coupler and outgoing feeders are breaker controlled with relays on all of them. In this case, RBS is application is straight forward. In case of power plants (or industrial plants), majority of feeders are controlled by breakers but some of the outgoing feeders (typically motor feeders rated 1 MW and below) can be controlled by vacuum contactor. Even these feeders are provided with comprehensive Motor Protection Relay (MPR) which has phase short circuit element (I_1) and earth fault element (I_0). Since phase short circuits are cleared by fuse, (I_1) is not wired to trip the contactor. However, pick up of both I_1 and I_0 are used to reverse block the instantaneous element of incomer. Similarly pick up of locked rotor element of MPR on all motor feeders is used in RBS. This is to prevent tripping of incomer on earth fault protection when a large motor is started.

6.1 Reverse Blocking Scheme (LV systems)

RBS is gaining popularity even in LT switchgear applications. Refer figure 11. For F1 fault, R2 clears the fault and R4 acts as backup. Pickup contacts of R1, R2, R3 (only breaker feeders) are connected in parallel and wired to binary input of R4 to block 50/50N of R4. For F2 fault, 50/50N of R4 clears fault instantaneously. But the presence of switch-fuse feeders poses problems when RBS is used in LV switchgear. For outgoing SFU feeder fault, blocking of instantaneous element of bus coupler and incomer relay is achieved by current discrimination. Incomer

relay and bus coupler relay pickups are set higher than the operating current of highest rated fuse at 10ms.

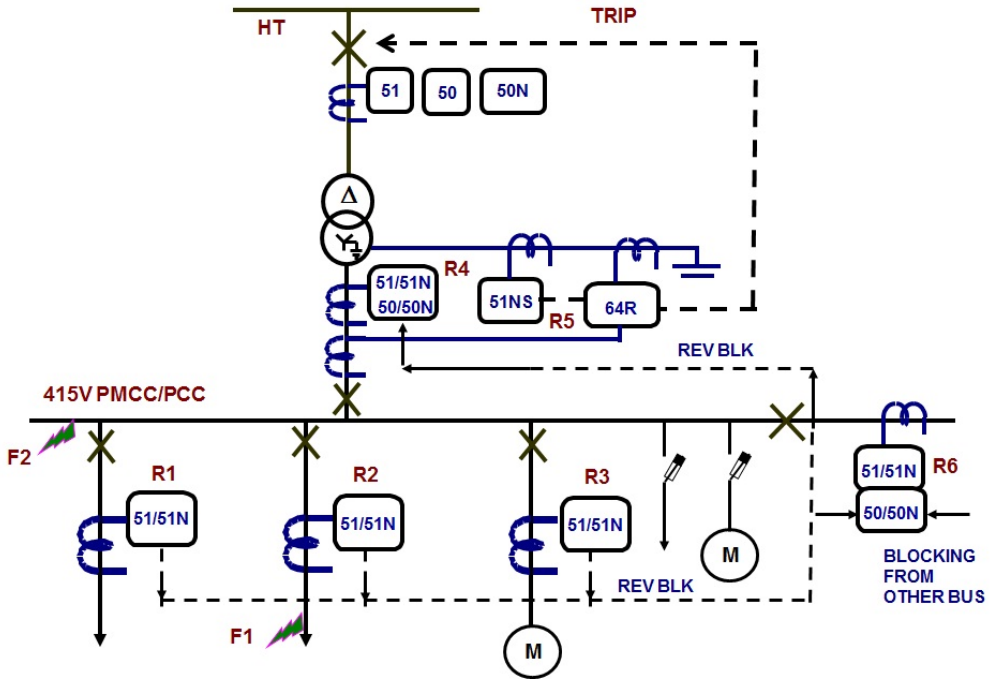

Fig 11 Reverse Blocking Scheme in LV System

The operating current of fuse at 10 msec is 8kA, 9.5 kA and 21 kA for 315A, 400A and 630A SFU feeder respectively. The pickup settings of instantaneous stage of incomer and bus coupler relays are set above this value. If rating of outgoing SFU feeder is 630A, bus coupler and incomer are set at ≥ 21kA. This reduces sensitivity, i.e, for arcing bus faults of low magnitude, the protection element set at 10 kA or 20kA may not pickup and will be cleared with time delay as per time delayed stage (51/51N) setting. The problem can be mitigated to some extent if following suggestions are considered:

i) Feeders rated 630A and above shall have breakers.

ii) At the design stage lot of margin is built-in while selecting the SFU rating. It is suggested that fuse rating be selected as per actual load requirement. If the actual current is only 100A on SFU feeder rated 400A, it is desirable to provide, say 200A fuse, rather than 400A fuse. Pick up of instantaneous element of incomer can be set correspondingly lower and make it more sensitive. Common fuse base can be selected for a range of SFUs to take care of future load growth

if any. For example, fuse base will be common for SFUs rated 630A, 400A and 315A.

iii) For higher rated SFUs (630/400/315A), Fault Passage Indicator (FPI) with phase fault detectors and individual CTs in each phase can be provided. The potential free contact of the indicator would be used for blocking of incomer /bus coupler for reverse blocking. With this, reverse blocking scheme can be implemented with sensitive pickup settings. Practical feasibility needs to be ascertained with LT switchgear vendor regarding mounting arrangement of CTs and FPI.

7.0 Alternate to REF protection scheme in LV system – Pseudo REF

The principle of operation of Reverse Blocking Scheme is extended to provide fast fault clearance of earth faults between transformer and LV breaker and LV winding. Refer Fig. 12. In this scheme, termed Pseudo REF, two stages are set for standby earth fault protection relay, R5. Stage-1 is 51NS with conventional time delay (typically 1.1 sec), coordinated with downstream relays. Stage-2 is 50NS with 100 ms time delay. Pickup stage of incomer earth fault relay, R4 is used to block Stage-2 of standby earth fault element of R5. Pickup contacts of outgoing feeders already wired to R4 for reverse blocking scheme is also used to block Stage-2 of standby earth fault element of R5. This is not mandatory, but adds to security in case incomer relay R4 fails to reverse block.

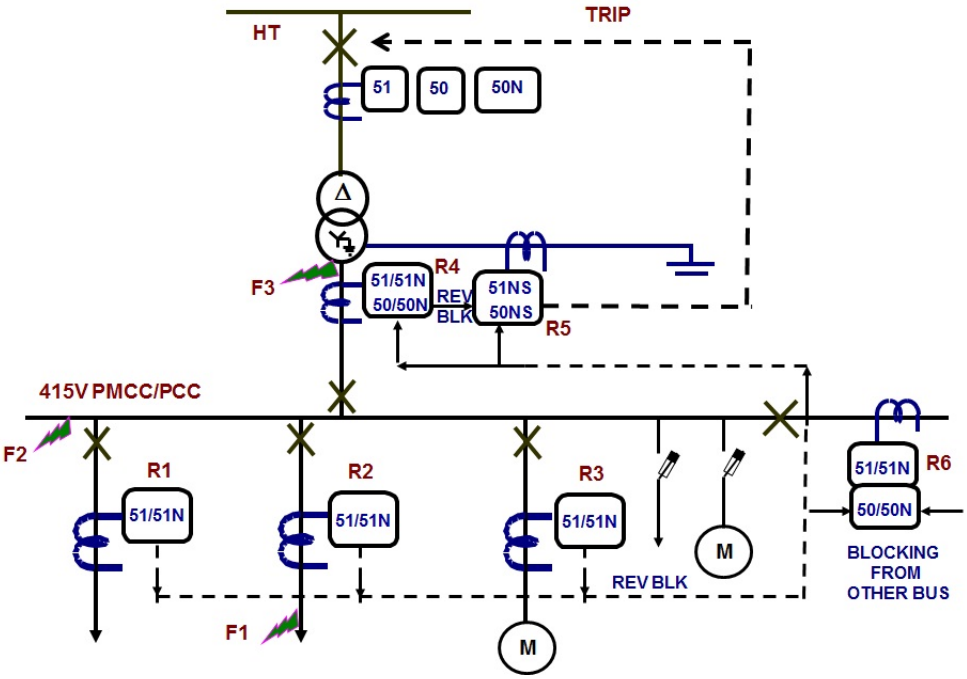

Fig 12 Reverse Blocking Scheme and Psuedo REF in LV System

For F1, F2 faults, stage -2 (50NS) of Relay R5 is blocked. For F3 fault Stage-2 (50NS) of standby earth fault relay R5 will clear the fault in 100ms. Advantage of this scheme is fast fault clearance can be achieved as in a conventional REF scheme.

In conventional REF scheme, 5 CTs and separate relay (64) are required. In Pseudo REF scheme, these can be omitted.

In Mumbai Distribution, Pseudo REF scheme has been implemented in 11kV switchgear. The performance has been good. In the revised specification for 11kV switchgear and transformer, phase side CTs and neutral side CT and REF relay (64) have been deleted. This results in significant cost reduction without sacrificing discriminated protection.

8.0 Reverse Blocking Scheme Implementation

Reverse blocking scheme, shown in Fig 12, provides flexibility to use instantaneous protection in incomers and allows fast clearance of bus faults. The scheme can be implemented by wiring normally open (NO) contact (configured for over current and earth fault protection pickup) of relays on outgoing feeders in parallel up to bus coupler and respective incomer binary input. Scheme wiring can be as per Fig. 13 and 14. However in this method of wiring, correct operation of scheme is highly dependent on the integrity of the control wiring. There exists a possibility of malfunction of the scheme for any of the following reasons:

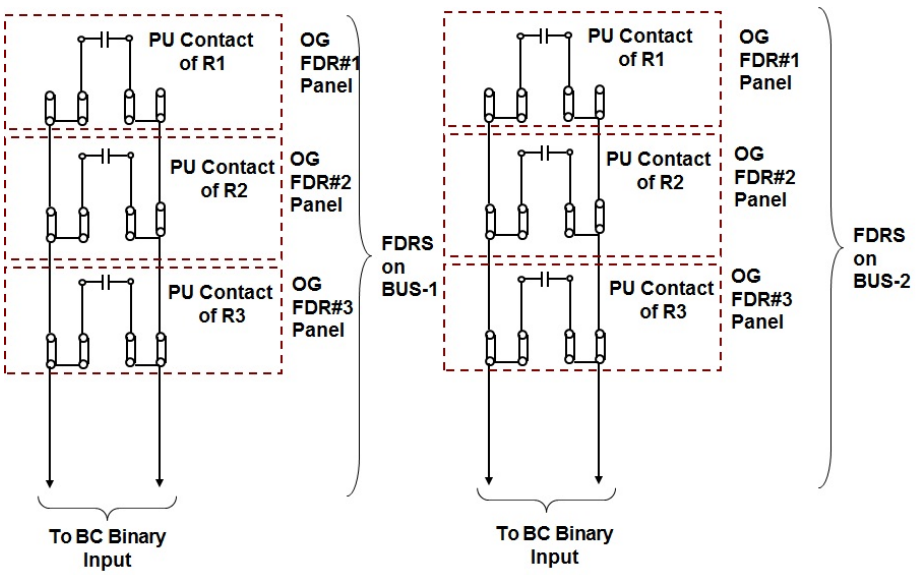

Fig 13 Wiring of Reverse Blocking and Psuedo REF Scheme for Buscoupler

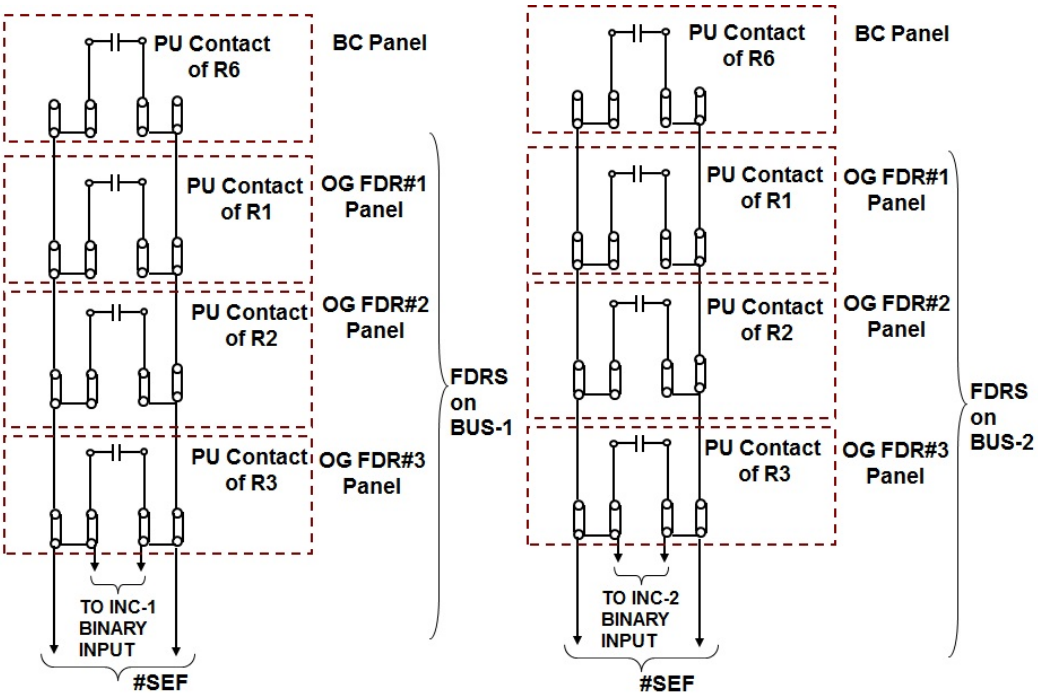

#SEF: Extended to SEF Relay binary input, if SEF is separate relay and not part of incomer relay.

Fig 14 Wiring of Reverse Blocking and Psuedo REF Scheme for Incomer-1 and 2

i) One of the outgoing pickup contact is missed out while wiring (commissioning error)

ii) Wiring break at any intermediate section

iii) Loose connection at any of terminal blocks

For the above cases, upstream (incomer / buscoupler) relay may not receive blocking command from outgoing feeder. It will lead to uncoordinated tripping of incomer for outgoing feeder fault. Also wiring is not monitored in this method.

To overcome the above shortcoming, NC contacts (configured for over current and earth fault protection pickup) can be wired in series. An auxiliary relay can also be connected at the end of series for monitoring the wiring of scheme. Refer Fig. 15.

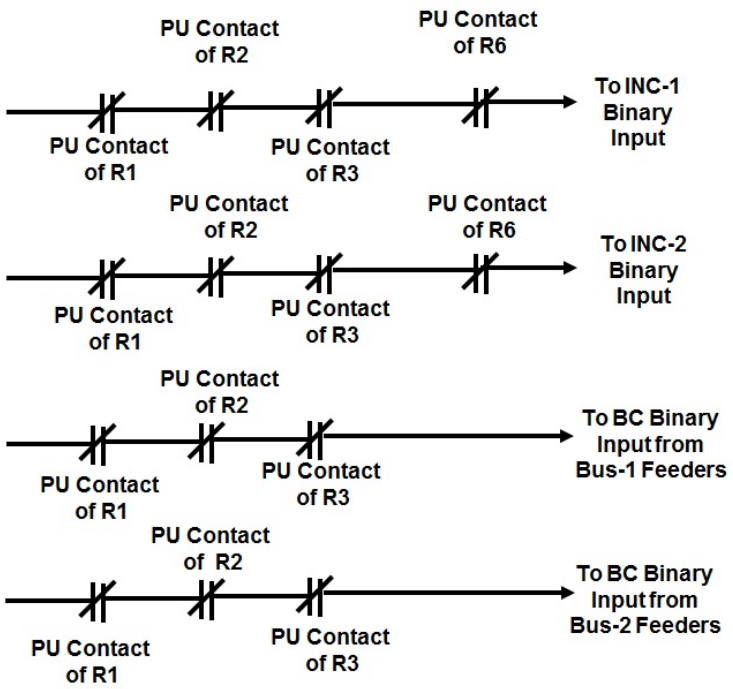

Fig 15 Improved method of Wiring Reverse Blocking and Psuedo REF Scheme

9.0 Acknowledgement

The suggestions given by D Guha have been pivotal for successfully engineering the schemes described. Sachin Suryavanshi actively participated in implementing Pseudo REF schemes in Mumbai Distribution System. Sanjay Bhargav contributed in improving the reliability of scheme (making it fail safe) during implementation at site.

10.0 Conclusions

Protections provided for LV switchgear and Auxiliary transformer are given. Typical operating time of each relay for phase fault and earth fault is given to ensure coordination between upstream and downstream relays.

In conventional implementation of REF scheme in LV system, 5CT scheme is preferred. NCT for REF shall be after bifurcation point. NCT for SEF shall be part of transformer neutral bushing. This recommendation holds good irrespective of whether breaker is 3 Pole with neutral link or 4 Pole breaker.

The concept of RBS, as an alternate to Bus Bar Protection, is explained. Applicability of RBS to EHV, MV and LV systems is examined. Sensitivity issues become critical, especially when high rated fuses (315A and above) are used, when RBS is applied in LV switchgear. Suggestions to improve sensitivity include choosing appropriate fuses and use of FPIs.

Pseudo REF is a novel concept developed based on RBS. It can be applied to both MV and LV systems. With Pseudo REF scheme, CTs on Phase side and Neutral side and dedicated REF relay are not required.

11.0 References

[1] Restricted Earth fault protection practices, K Rajamani, IEEMA Journal, January 2006, pp 92 -95.

ieema journal

Functional Features of Transformer - Expectations from User Perspective

Dr K Rajamani,

Reliance Infrastructure Ltd., MUMBAI

(Key Note Address, 11 Jan 2014, 9th International Conference on Transformers, IEEMA, Bangalore, India)

Functional Features of Transformer - Expectations from User Perspective

Dr K Rajamani, Reliance Infrastructure Ltd., Mumbai

1.0 Introduction

One of the major components in the supply chain from generating station to load centre is transformer. The rating of transformer varies from a few hundred KVA in distribution system to GVA in UHV transmission system. The operating principles and design aspects are well known. The improvements both in design as well as O&M practices are being covered in articles presented in various sessions.

The main tent of this presentation is to bring to focus the most desirable features of a transformer as envisioned by ultimate user. The '*WISH LIST*' expressed in the sequel is based on author's personal experience. By the very nature of this exercise, consensus on items listed below from all users is difficult to achieve. However the list can be a pointer for further deliberations by experts presenting papers in various sessions and of course the participants from manufacturers and end users.

2.0 Transformer sizing for Non-linear load applications

Two major effects on transformer when supplying nonlinear loads are increased copper loss and increased eddy current loss. Increased copper loss is due to increased RMS current due to presence of harmonics.

Weighed RMS current, $$I_{RMS} = \sqrt{\sum_{H=1}^{N} I_H^2 H^2}$$

Eddy current loss is due to flow of induced currents in winding, core and other conducting bodies subjected to magnetic flux. Eddy current loss is proportional to $I^2 x f^2$.

IEEE Std C57.110 gives procedure for establishing transformer capability when supplying non-sinusoidal load.

Step 1:

Establish the K Factor. Power Quality Meters indicate this as a direct reading.

$$K_F = \frac{\sum I_H^2 H^2}{\sum I_H^2}$$

Step 2:

Estimate eddy current loss factor P_{EC} from the graph. Refer Fig. 1

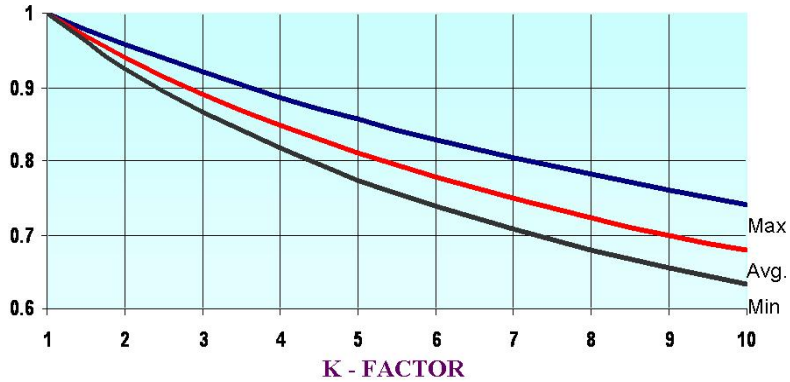

Fig 1. Graph for Eddy current loss factor - P_{EC}

Step 3:

Derating Factor is given by: $\mathrm{DF} = \sqrt{\dfrac{1+P_{EC}}{1+P_{EC}K_F}}$

The above exercise was carried out on power supply to a Data Centre.

Voltage and current waveforms from the output of 2000 kVA transformer are shown in Fig 2.

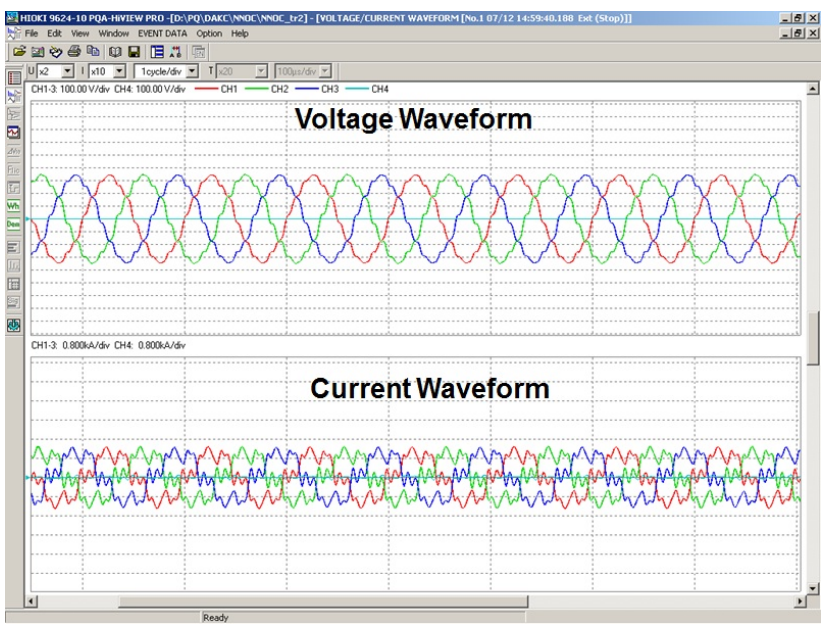

Fig 2. Voltage and Current Waveform

K factor = 10.15

From Step 2, P_{EC} = 0.68

From Step 3, P_{EC} = 0.46

The load on the transformer has to be restricted to below 920 kVA (2000x0.46) to avoid overheating of transformer.

Similar exercise was carried out for other transformers within data centre feeding server loads. The results are tabulated in Table-1:

Transformer Rating	K Factor	Transformer to be loaded to
11/0.415kV, 2 MVA	10.15	0.93 MVA
11/0.415kV, 2 MVA	1.31	1.8 MVA
11/0.415kV, 2 MVA	1.53	1.8 MVA
11/0.415kV, 2.5 MVA	1.49	2.2 MVA
11/0.415kV, 2.5 MVA	1.7	2 MVA
11/0.415kV, 2.5 MVA	5.5	1.4 MVA

Table-1

It is recommended to consider derating factor of 0.6 to 0.7 during design stage when feeding data centre / non linear loads to avoid premature failure of transformers due to over heating.

3.0 Short circuit testing of large power transformers

After 1980s, there is rapid growth in Indian Power Grid both in transmission as well in generation. Bulk power transmission voltages at 400kV and 765kV are common. The unit sizes increased from 200MW to 500MW, 600MW and finally 800MW. The above growth is matched by increase in transformer capacities. Ratings of *Single Phase Generator Transformers* have reached 333MVA. There was understandable concern for reliability of these high power transformers and power transformers feeding critical loads. But the quality index for transformers has been turned into getting certificate for short circuit withstand capability. Significant number of transformers manufactured in India are getting short circuit tested in leading laboratories in India and abroad. But the users should be cautioned against undue optimism that once the transformer has passed the short circuit test, similar transformers manufactured from the same entity, will not fail during service. Transformer manufacturing, especially winding and coil assembly has a large manual content. A lot depends on the work culture of skilled labour, manufacturing and quality standards, material used etc. Any small lacuna in workmanship and assembly will lead to failure during or subsequent to short circuit in the field.

All leading transformer manufacturers use well proven software. Design wise transformers on paper will withstand short circuit forces. How to translate this into reality is a real challenge. Instead of relying on short circuit tests as a sole arbiter, it may be more prudent to adopt following strategies:

i. Internal design review as per CIGRE / IEC guidelines.

ii. Appoint external expert especially to review short circuit withstand design using software tools like Anderson program.

iii. During contract finalization stage itself, agreement shall be reached with the manufacturer to provide data for design review by external consultants.

iv. The most important aspect in Indian context is to develop guidelines to assess manufacturing skills / practices of selected vendor and control over raw material to be used. The manufacturing skills of *same* vendor can vary from one location to another location. The Quality assurance department of user group has a critical role to play.

v. QA does not end with manufacturing and testing at works. The real challenge starts when the transformer manufactured and tested according to international standards leave the factory. QA procedure shall be strictly adhered to during transportation (sea, rail, river, road), storage at site and erection process. If the impact recorder registers 7g during transportation, even a well designed and manufactured transformer will fail in service!

vi. Also it should be abundantly clear to the user that the short circuit withstand capability is essentially for through fault. But for a fault on source side near the terminal with no intervening impedance to limit short circuit current and with maximum current asymmetry, likelihood of transformer failing is high. Incidents of tank bursting are many in spite of operation of PRDs! Of course chances for such incidents are rare, may be never in the life of most of the transformers. In case of generator transformers L-L fault on LV is rare due to isolated phase bus duct and short circuit current due to HV faults will be limited due to high generator impedance.

4.0 Delta tertiary – Unnecessary evil?

One of the basic features of transformer operation is that the no load (exciting) current of transformer has to be non-sinusoidal to produce sinusoidal flux. This is due to the fact that (B-H) curve is not a straight line over entire region. The exciting current has a predominant third harmonic component.

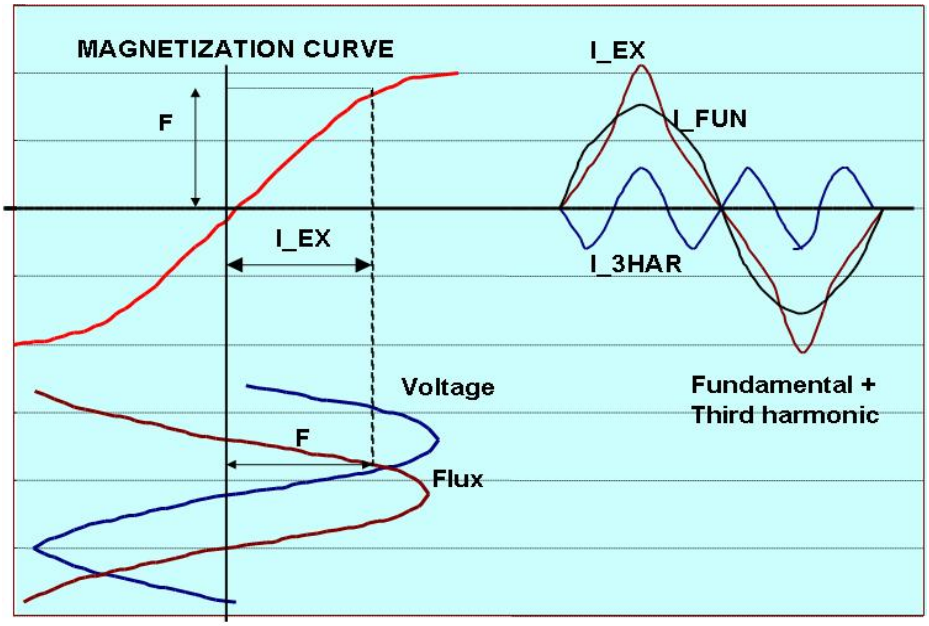

Fig 3. Magnetization Curve

Third harmonic and multiples of third harmonic are zero sequence currents that can circulate within delta winding and need not come out of the terminals on the line side. Refer Table-2 and Fig.4.

Harmonics	R (°)	Y (°)	B (°)	Phase Rotation
Fundamental	0	120	240	(+)ve
Third	0	3 x 120 (0)	3 x 240 (0)	Zero (*)
Fifth	0	5 x 120 (240)	5 x 240 (120)	(-)ve
Seventh	0	7 x 120 (120)	7 x 240 (240)	(+)ve
Ninth	0	9 x 120 (0)	9 x 240 (0)	Zero (*)

(*)Third harmonic and its multiples are zero sequence.

Table-2

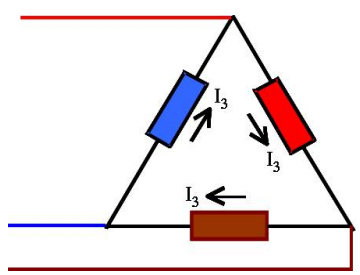

Fig 4. Third Harmonic current in Delta winding

In case one of the windings is delta like Yd or Dz, the third harmonic component of exciting current can naturally circulate within delta winding. In case of Yy or Yz

transformers, in the absence of delta winding, the third harmonic component of no load current will flow on the connected lines which is undesirable. In these cases, it is a practice to provide an additional winding called tertiary winding. This winding is provided to contain the third harmonic component within transformer. Refer Fig. 5.

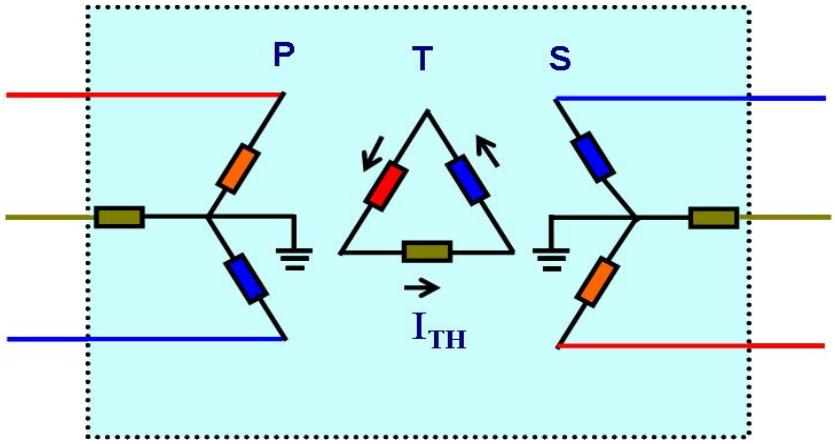

Fig 5. Star-Star Transformer with delta tertiary winding

However it has been recognized that tertiary has been one of the weakest links in the transformer. Any fault / failure in tertiary results in tripping of main transformer. The silver lining is that in modern power transformers using vastly superior core materials, it is possible to eliminate tertiary winding without significant distortion in voltage. This has been made possible due to very low exciting current in modern transformers (<0.2%).

Rating (MVA)	Voltage Ratio kV/kV	Vector Group	I_0 % of I_{RAT}	I_{3H} % of I_0
25	20/6.9	Dyn11	0.02	24
40	220/34.5	YNyn0	0.07	23
125	220/33	YNzn11	0.07	35
250 1Φ	400 /√3 / 20	YNd1	0.07	54
315	400/220/33	YNynΔ	0.12	33
333 1Φ	765/√3/400/√3/33	YNynΔ	0.04	28
335	420/15.75	YNd1	0.04	24
370	230/20	YNd1	0.05	19

Table-3

The third harmonic component is typically 35% of no load current which itself is very low. Refer Table-3. In effect third component even if it flows on the line is insignificant to have any impact.

In brief, even up to 200 MVA three phase transformer capacity with Yy or Yz windings, it is possible to eliminate tertiary winding provided core is three limbed. In these cases it is desirable to specify no load current to be less than 0.3%. Improved reliability is obtained *with a reduction in cost* due to elimination of tertiary winding.

5.0 Zig-Zag winding in Power Transformer

Zig-Zag winding in power transformer is very rare. But more than 70 years back, Mumbai supply distribution company (erstwhile BSES) deployed Dz10 step down power transformers. Out of curiosity, old veterans in BSES were consulted why this vector group was chosen. Their guess was that the major load in those times was Railways operating at 1500V DC. Zig-Zag is a preferred configuration to supply rectifier loads. If the load contains significant dc component / third harmonic, fluxes due to currents in zig and zag windings cancel each other and results in minimum saturation. Of course even today, the legacy continues and all 33/11 kV, 20 / 25 / 31.5 MVA power transformers have vector group of Dz10.

In 1990s, 220kV transmission lines were commissioned by BSES. The bulk power transformers were chosen as 100MVA, 220 / 33 kV, YNd11. 33 kV side is earthed through zig-zag Neutral Grounding Transformer (NGT). In 2006, when Reliance Transmission wanted to augment the capacity, 125MVA, 220 / 33 kV, YNzn11 transformers were installed. Neutral Grounding Reactor (NGR) was connected to zig-zag neutral to achieve effectively grounded system. It is interesting to note that these transformers are procured *without delta tertiary* and are working satisfactorily for the last six years.

The advantages of YNzn11 winding arrangement are as follows:

i. It could be paralleled with pre-existing YNd11 transformers.
ii. Both HV and LV neutrals are available for grounding as per user's choice.
iii. Zero sequence isolation between primary and secondary is achieved, Ground fault on 33 kV side is reflected only as phase faults on 220 kV side. Refer Fig. 6. This enables reliable protection coordination. This is especially useful in distribution networks where 33 kV cable faults are not that infrequent.

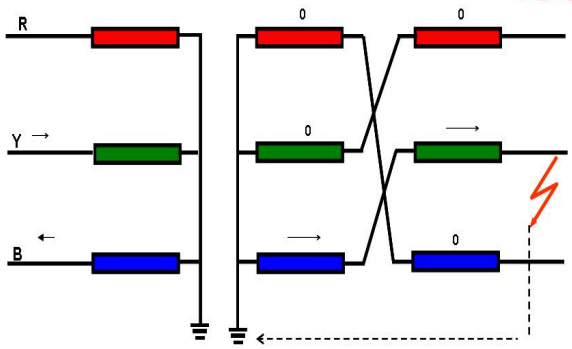

Fig 6. LG fault on Zigzag side is reflected as LL fault on Star side

6.0 Dry Bushing

The weakest links in transformer are bushing, tap changer and tertiary if present. Any improvement in bushing will have significant impact on overall reliability of transformer. The conventional bushings are OIP (Oil Impregnated Paper) condenser type. Also the housing is generally porcelain. When the bushing bursts due to internal fault, the collateral damages are high.

The alternative is to use completely dry bushing without oil. : RIP – (epoxy) Resin Impregnated Paper condenser bushing is gaining popularity**.** RIP with silicon housing has following advantages:

i. Very reliable since there is no oil.
ii. Light weight due to silicon housing.
iii. Can be mounted at any angle.
iv. Available up to 765 kV.

The flip side is that reliability of RIP bushing is dependent on strict quality control during manufacture and curing process. Defective manufacture leads to premature failure. Once it has failed it can not be repaired but has to be discarded like vacuum bottles in VCBs. RIP bushings are costlier compared to OIP by more than 50%. The number of reputed manufacturers making RIP bushings in the world is also limited. Presently there is no leading Indian manufacturer making RIP bushing.

7.0 Paperless winding

Most of the manufacturers have switched over to CTC (Continuously Transposed Conductor). Use of CTC has resulted in significant reduction in eddy current losses. In the conventional CTC, the insulation over conductor is by either with Kraft paper or thermally upgraded paper.

Recently manufacturers have introduced paperless CTC (netted CTC) in which conductor is not covered with paper but with a very thin film (about 0.1 mm thick) synthetic enamel like PVA. Since there is no paper between conductor and dielectric oil, heat transfer is far superior (almost 250% better). The current density can be

higher *without increase in gradient* compared to conventional CTC with paper. Improvement in space factor of copper in winding volume is another advantage.

The drawback of paperless CTC is that impulse and transient voltage withstand is inferior to paper insulated winding as there is only a thin film of enamel between conductor and oil. Dielectric constant of oil impregnated paper is 3.3 while that of oil is only 2.2. Voltage stress on paper covered CTC is thus only 67% of paperless CTC. Hence paperless CTC application has been limited to helical windings rated up to 36 kV and BIL less than 200 kV.

For transformers with helical windings paperless CTC offers the best choice. It has gained dominant position for low voltage high current applications like LV windings of large generator transformers. Age of transformer basically refers to age of paper. If paper itself is eliminated, there is a paradigm shift in evaluation of transformer aging.

8.0 Green Dielectric Fluid

The cooling medium within transformer has remained the same for almost a century. Mineral oil (napthenic / paraffinic / aromatic) - derivative from petroleum has been the backbone for transformer cooling. But it has poor bio-degradable property. In 1940s, another alternative emerged namely askerals but due its toxic nature and non-bio-degradable nature, its usage was banned during late 1970s.

In 1980s, there was upsurge in Greens movement world wide. Major efforts were made to find alternatives to mineral oil. The alternative has to have as good dielectric and heat transfer properties as mineral oil but also should have better biodegradable property. In this quest for green fluid, two candidates emerged, namely synthetic ester and natural ester. Synthetic ester is derived from special acids and alcohol. Natural ester is derived from soya, sunflower or rapeseed. Ester oil has excellent bio-degradability. Negative point is high cost, almost 4 times costlier than mineral oil.

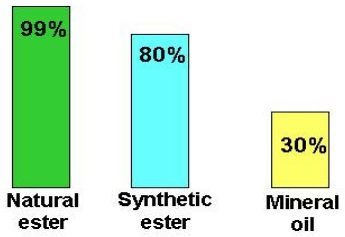

21 day Bio-degradability test (California EPA)

Comparison for relative aging for mineral oil and ester oil is very revealing. Refer Fig 7. For normal aging, temperature for paper in ester oil is 114°C compared to 98°C for mineral oil. Higher hot spot temperature is allowed with ester oil *without extra aging*.

This is due to high moisture saturation level in esters {of the order of 2600ppm (synthetic ester) and 1100ppm (natural ester) against 55ppm for mineral oil at 23°C}. Due to this difference in solubility, moisture in paper will be reduced when esters are used.

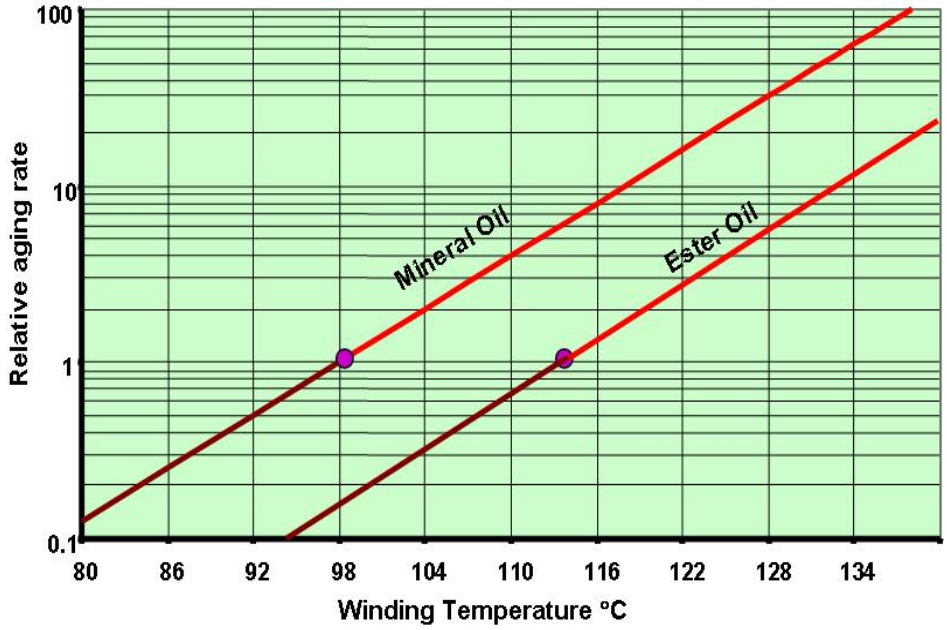

Fig 7. Comparison of Relative Aging rate

Other major points of comparison between mineral oil and ester oil are as follows:

i. Ester oil retains dielectric strength even with higher level of moisture absorption compared to mineral oil.

ii. Dielectric strength of paper impregnated with ester oil is comparable to paper impregnated with mineral oil.

iii. The flash point of ester oil is 360°C compared to 140°C for mineral oil. Transformer with ester oil is less flammable with minimum fire risk. Transformers with ester oil can be considered where dry type transformers are envisaged.

iv. DGA for mineral oil is well established science now. DGA standards for ester oil are also available.

v. Still the answers to following questions are ambiguous: wide acceptability by statutory authorities, possibility of doing away with emulsifier / nitrogen injection system, reduction in insurance premiums, TAC recommendations, etc.

vi. Establishment of ester oil manufacturing facilities in India.

9.0 Low noise transformers

With the rapid increase in load growth in urban areas, EHV cables and lines have started penetrating deep within populated areas. Large and medium sized power transformers are erected very near to residential colonies. The noise pollution (humming sound) by transformers, especially at night, is annoying. The main source of noise is due to magneto-striction effect which is at twice fundamental frequency (100 Hz in India). The other source is due to cooling equipment like fans.

Sample sound levels measured at site conditions are indicated below in Fig 8. Sound levels near to transformer or even within switchyard control room building are not of much concern as general public are not in the vicinity. The major area of concern is sound level near the housing colonies during night. It is desirable that during night, noise level is below 50 dB or even 45 dB. It is seen that low noise fans for cooling could make a difference of 2 dB even at far away distance from transformer.

Sound level dB at 1 AM			
Location	**ONAF**	**ONAN**	**Difference**
A	59.9	57.2	2.7
B (Transformer Tank)	71.4	69.9	1.5
C (Cooler Bank)	75.0	64.2	10.8
D	68.0	62.0	6.0

Table-4

Sound level dB at 8 AM			
Location	**ONAF**	**ONAN**	**Difference**
A	63.3	62.5	0.8
B (Transformer Tank)	72.7	69.2	3.5
C (Cooler Bank)	75.9	69.9	6.0
D	66.2	65.1	1.1

Table-5

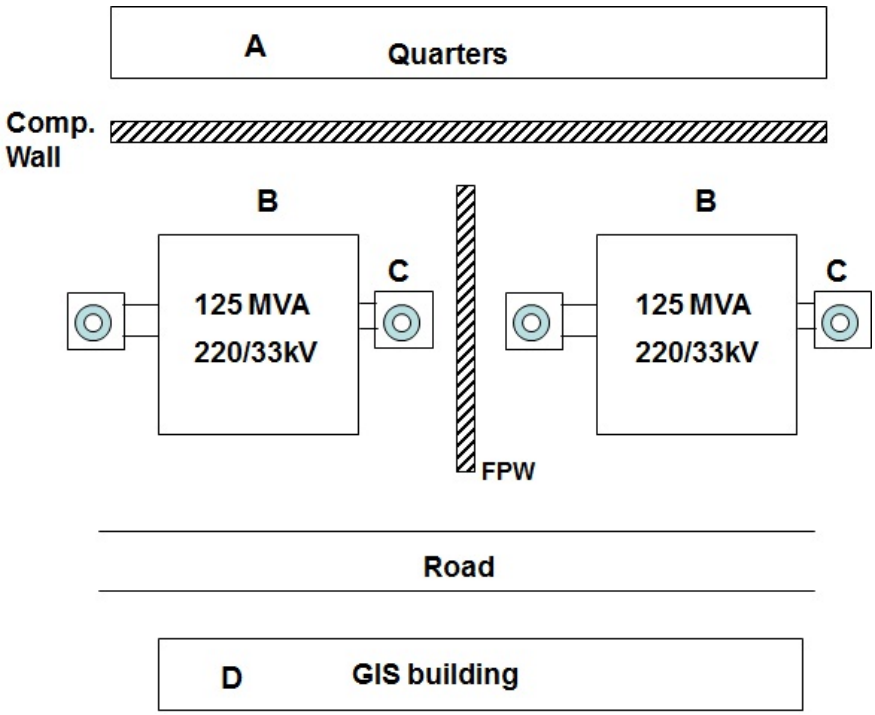

Fig 8. Typical 220/33kV Substation

The final objective shall be reduction in noise level near the residential areas. It could be tackled in following stages:

i. Use of low noise fans: Very few Indian vendors for this item.

ii. Steel plate panels over tank side walls and cover steel plate interiors are lined with sound absorbent material.

iii) Transformers specifically designed for low noise application – it can be expensive.

For those sites where transformers are already installed, replacement of existing fans by low noise fans and erecting sound barrier walls are the only alternatives available. Design of sound barrier walls is a highly specialized topic. Extensive site survey / measurements have to be done before the acoustic expert can come up with a viable solution.

As a starting point we can aim to limit the noise level near the transformer (1M from tank) to within 65 dB.

10.0 OLTC Tap Range

The ubiquitous use of OLTC with large tap range has become more a norm than exception. However it is well recognized that one of the weakest links is tap changer. Every extra tap lead is a source of concern. A sample case study was done on

existing 20 MVA transformer. It has following specification: 20 MVA, 33/11 kV, OLTC Tap Range: +3.6% to -23.4% in steps of 1.8%. It has 16 steps.

20MVA, 33/11 kV Transformer

OLTC Range +3.66% to -23.4%

Tap positions	Tap (%)	Primary Voltage (Volt)
1	+3.6	34188
2	+1.8	33594
3(N)	0	33000
4	-1.8	32406
•		
10	-12.6	28842
•		
16	-23.4	25278

Table-6

All the data pertaining to the transformer are monitored in SCADA. Through data mining, the actual usage of taps for extended period was analysed. It can be seen from Table 7 that Tap 10 to 16 were *NEVER used* !

SCADA – DATA MINING RESULTS

Tap No.	Duration of Stay in particular Tap (Hrs.)	% Duration *
2 (+1.8%)	27	1.84
3 (N)	167	11.41
4(-1.8%)	410	28.01
5(-3.6%)	379	25.89
6(-5.4%)	265	10.10
7(-7.2%)	156	10.62
8(-9.0%)	52	3.55
9(-10.8%)	8	0.55
Total	**1464**	**100%**

Table-7

This exercise enabled us to change the OLTC range for newly procured transformers as follows: +5.4% to -10.8% in steps of 1.8%. It has only 10 steps. Refer Table 8.

20 MVA, 33/11.3 kV Transformer OLTC Range

Tap Position	Tap (%)	Primary Voltage (Volt)
1	+5.4	34782
2	+3.6	34188
3	+1.8	33594
4(N)	0	33000
5	-1.8	32406
•	•	•
10	-10.8	29436

Table-8

10.1 OLTC usage

Some strange things happen in the field. After providing OLTC with large tap range, they have never been operated or operated rarely! There is a general hesitancy among O&M engineers in operating OLTC. It defeats the very purpose of providing OLTC. The O&M engineers should have the confidence to operate OLTC at will as per system requirements. In Mumbai Discom, there are almost 130 transformers (33/11kV) provided with OLTC. The taps are changed through action of AVR or remotely from SCADA. Number of tap change operations carried out as captured by SCADA in a few selected power transformers is shown below.

SCADA DATA – Number of OLTC Operation

33 / 11 kV Power Transformer – Mumbai Discom – Nov.2010

Name of the Transformer	Tap Count
KIE 20 MVA – T2	466
Gorai 20 MVA – T2	402
Siddngr 10 MVA – T1	392
Malad 10 MVA – T1	390
Saki 20 MVA – T4	389

Table-9

OLTC is operated almost 13 times per day. In spite of wide variation in load over the day, this has enabled to maintain the 11kV voltage profile within ±2% which can be compared with best utility in the world

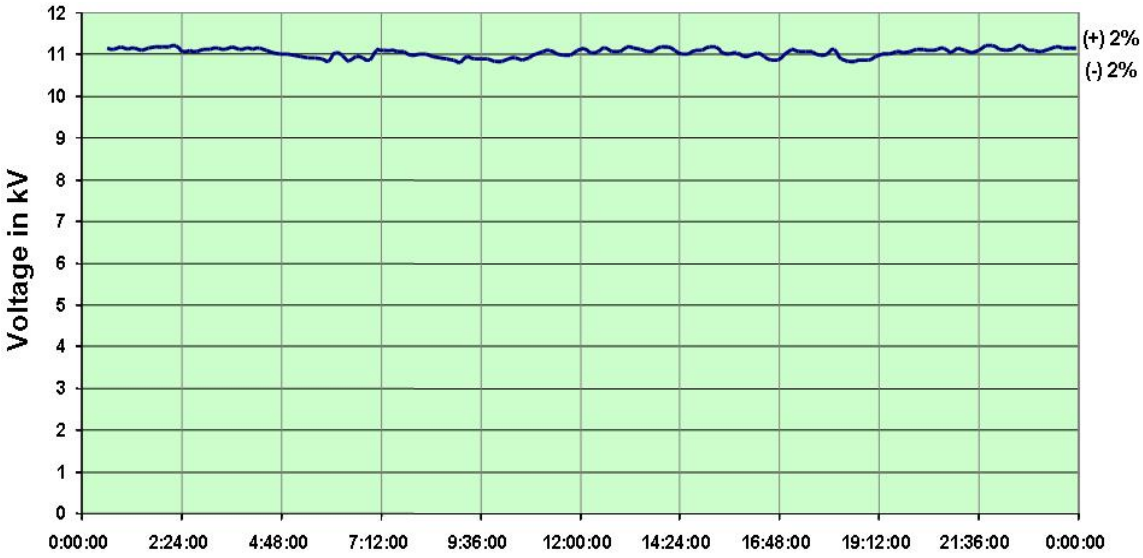

Fig 9. 11kV Voltage Profile

It is needless to add that excellent maintenance of tap changer assembly periodically is a pre-requisite for carrying out this many operations with confidence.

The user is encouraged to question the traditional thinking that every transformer should have taps (either off circuit or on load). For example, no tap has been provided for a 1000 MVA 765 / 400 kV ICT. In Italy all 400 KV auto-transformers are with out tap changers, enhancing the reliability level considerably.

Also a rethink on usefulness of providing taps for GT is necessary. The GT tap has been seldom changed from the day the unit is commissioned. When the unit is running at full load, the station in-charge rarely allows change in GT tap even if OLTC is provided. Under these circumstances, four choices in decreasing order of preference are available for GT: (a) without any tap (b) OCTC with bare minimum taps (±2.5%) (c) OCTC with conventional taps (±5%) and (d) with OLTC. The message is that fewer the tap leads, more reliable is the transformer. In India also some power utilities have started specifying hydro generator transformers with out tap changers. In the famous Three Gorges Project in China, the 840 MVA 3 phase Generator Transformers (impedance 17 %) are with total 5 % OCTC tap range, while some of the 600MVA Generator Transformer banks in our country are with 20 % OCTC tap range!

11.0 Elimination of extra CT for GT differential protection

For a bank of single phase transformers, differential protection scheme is shown in Fig. 10.

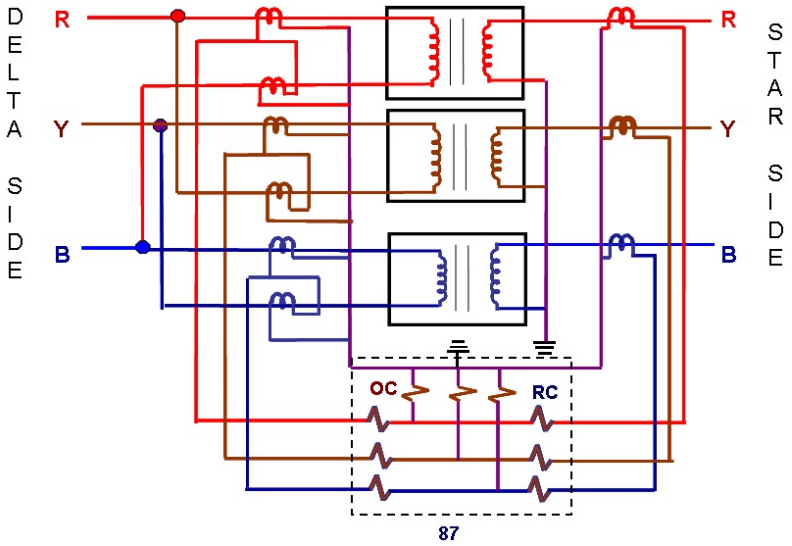

Fig 10. Conventional Differential Scheme for Single Phase Transformer

Two CTs, on either side of LV windings are provided, intrinsically to cover ground faults in the delta winding. This scheme (Refer Protective Relaying by Blackburn) is built on the premise that sufficient current will flow on occurrence of earth fault. However in a power plant, high resistance grounding is provided for generator neutral. The earth fault current on the delta side of GT is limited within 10A. The differential protection of generator transformer cannot sense the ground fault in the delta winding. It can be sensed only by voltage based earth fault sensing scheme provided on generator terminals. In view of the above, provision of one CT on delta winding is sufficient as shown in Fig 11.

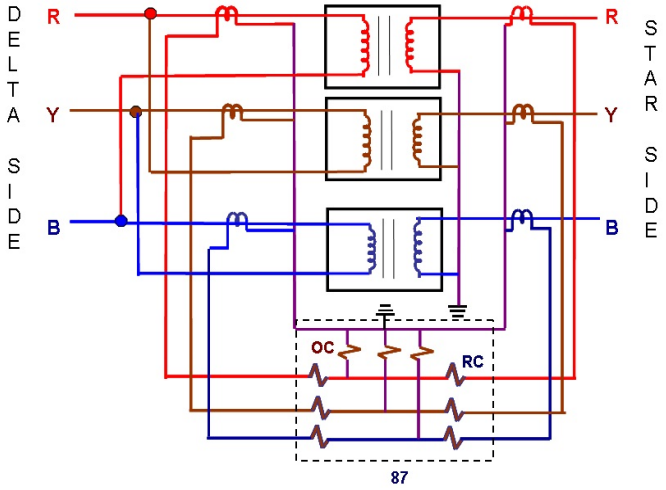

Fig 11. Differential Scheme for Single Phase Transformer with one CT in Delta

12.0 WISH LIST

1. Do not underestimate effect of harmonics on transformer heating; specify K rated transformer for feeding non-linear loads or derate the capacity.
2. Short circuit testing – more emphasis on design verification by external audit, quality control in manufacturing process, workmanship, transportation and erection.
3. Delta tertiary – can be avoided up to 200 MVA capacity. Specify three phase three limbed core with the tank acting as a virtual tertiary winding. Get the concurrence from manufacturer.
4. For step down transformer applications, star – zigzag winding can be adopted. It enables zero sequence isolation between primary and secondary. At the same time neutrals are available on both sides to adopt any type of grounding. Graded insulation is possible for both windings.
5. Dry type bushing with silicon housing without oil – RIP.
6. Paperless CTC winding – at least all windings up to 36 kV.
7. Green dielectric fluid – natural / synthetic ester.
8. Low noise transformer 'designed' for less than, say, 65 db.
9. Transformer without taps or limited tap range, if possible for ICT, GT.
10. Transformer with OLTC: provide minimum required tap range.
11. If OLTC is provided, do not hesitate to use it just as a new car after kept without running for two years will give surprises when you start it. OCTC tap changer shall be operated one end to other several times during the planned shut downs so that wiping action will clean the contacts.
12. In differential protection scheme for 3 single phase GTs, one bushing CT on delta side is adequate.

ieema journal

Basics of Dual Ratio Transformer

Dr K Rajamani and Bina Mitra,

Reliance Infrastructure Ltd., MUMBAI

(February 2014, IEEMA Journal, Page 95 to 97)

Basics of Dual Ratio Transformer

Dr K Rajamani and Bina Mitra, Reliance Infrastructure Ltd., Mumbai

1.0 Introduction

Dual ratio transformer has been used both in utilities as well as industries where the input can be from two sources at different voltage levels. As an example, some power transformers in Reliance Mumbai Distribution System are either connected to upstream 33 kV or 22 kV supply. These voltage levels have evolved over time. Similarly in industries, the old connection to grid can be at one voltage level and the additional (new) connection can be at different voltage level. However the user may like to use either of connection as per availability of supply. In these cases, dual ratio transformer is specified, with primary having two voltage levels. The article explains the concepts behind functioning of dual ratio transformer.

2.0 Primary connection

For illustration purposes, typical transformer used in Mumbai Distribution System is considered. The rating of transformer is 33 – 22 / 11 kV, 20MVA, Dzn10.

Secondary current, $I_s = \frac{20}{(\sqrt{3} \times 11)}$

$= 1050$ A

Primary current at 33 kV, $I_P^3 = \frac{20}{(\sqrt{3} \times 33)}$

$= 350$ A

Primary current at 22 kV, $I_P^2 = \frac{20}{(\sqrt{3} \times 22)}$

$= 525$ A

Transformer theory demands the following:

(a) Ampere Turns (AT) balance: Primary AT = Secondary AT

(b) Volts per turn (V/T) equality: V/T of Primary = V/T of Secondary

N_S: Total number of turns in secondary

N_P^3: Total number of turns in primary for 33 kV connection

N_P^2: Total number of turns in primary for 22 kV connection

The secondary voltage (11 kV) is same for both 33 kV and 22 kV primary connections.

February 2014, IEEMA Journal, Page 95 to 97

2.1 AT Balance

Primary is connected either in series connection or series – parallel connection. The selector switch for winding connection is mounted on tank and is operated off line. Refer Fig 1.

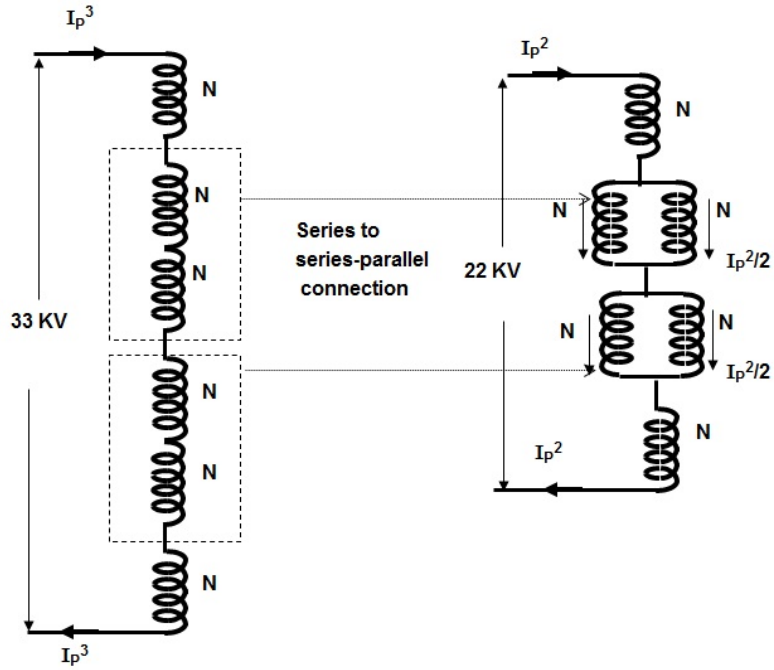

Fig. 1

$I_P^3 \times N_P^3 = I_P^2 \times N_P^2$

$= I_S \times N_S$

$(N_P^3 / N_P^2) = (I_P^2 / I_P^3)$

$= (525 / 350)$

$= 1.5$ **.....(1)**

Series Connection:

Primary AT at 33 kV $= I_P^3 \times 6\,N$

Series – Parallel Connection:

Primary AT at 22 kV $= [2 \times I_P^2 \times N + 4 \times \{(I_P^2 /2) \times N\}]$

$= 4 \times I_P^2 \times N$

$= 4 \times 1.5\, I_P^3 \times N$

$= I_P^3 \times 6\,N$

Thus Primary AT is same for both 33 kV and 22 kV connections.

2.2 V/T equality

As shown in Fig 2, the series connection or series – parallel connection satisfies the Volts / Turn equality.

In both cases, *flux* $\Phi = \frac{V}{T} = \frac{5.5}{N}$

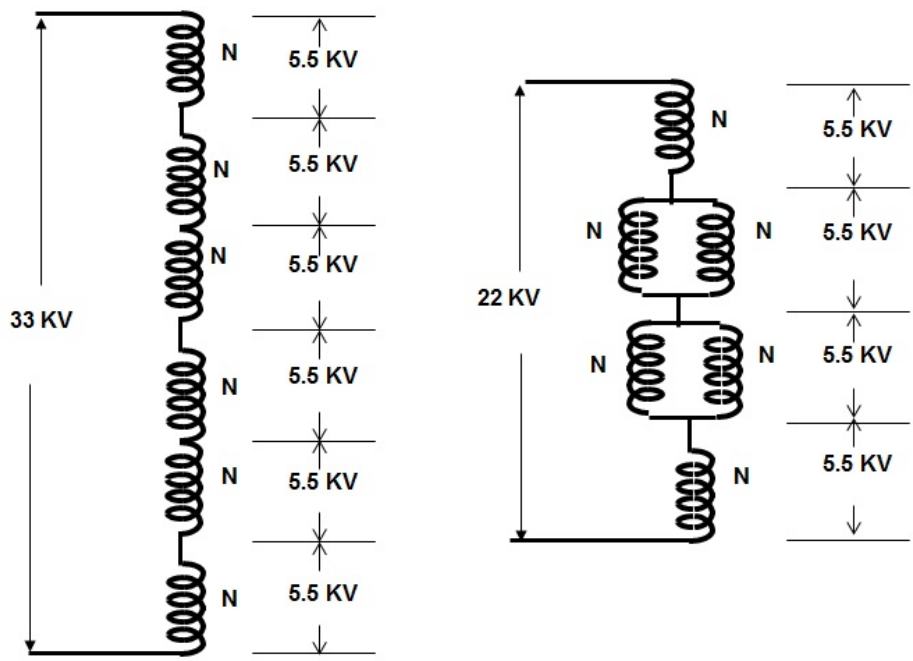

Fig. 2

3.0 Tap Step Size

If primary winding has taps, the step size as percentage of rated voltage will be different for both connections. Assume ΔN turns are shorted in both cases. Refer Fig 3.

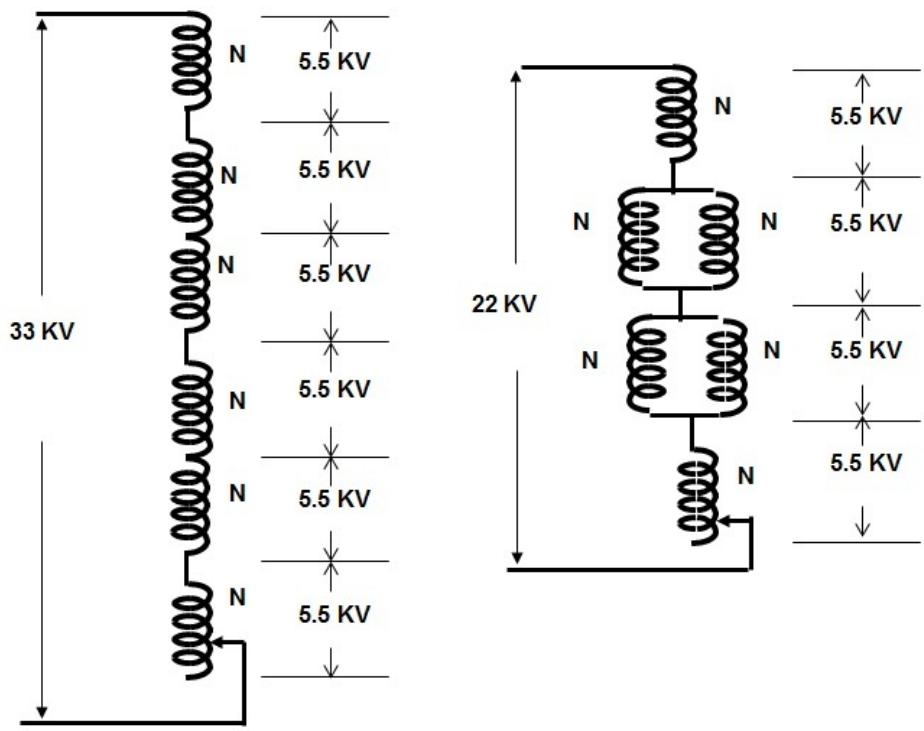

Fig. 3

Step size for 33 kV, $\Delta^3 = (\Delta N / 6N) \times 100\%$

Step size for 22 kV, $\Delta^2 = (\Delta N / 4N) \times 100\%$

$\Delta^2 = 1.5\ \Delta^3$

If Δ^3 *is 1.2%,* $\Delta^2 = 1.8\%$

This is further illustrated with an example in Table-I. The transformer rating is 20 MVA, 33-22/11kV. The on load tap changer (OLTC) has 10 taps (+5.4% to -10.8% for 22 kV and +3.6% to -.7.2% for 33 kV). The number of turns shorted is same for 33 / 22 kV. Voltage change for each tap is 396V.

Table-I

Tap No	Tap Step (%)	Primary Voltage 22 kV	Tap Step (%)	Primary Voltage 33 kV
1	+5.4	23,188	+3.6	34,188
2	+3.6	22,792	+2.4	33,792
3	+1.8	22,396	+1.2	33,396
4(N)	0	22,000	0	33,000
5	-1.8	21,604	-1.2	32,604
6	-3.6	21,208	-2.4	32,208
7	-5.4	20,812	-3.6	31,812

Table-I				
Tap No	**Tap Step (%)**	**Primary Voltage 22 kV**	**Tap Step (%)**	**Primary Voltage 33 kV**
8	-7.2	20,416	-4.8	31,416
9	-9.0	20,020	-6.0	31,020
10	-10.8	19,624	-7.2	30,624

Secondary Voltage at all taps – 11 kV

Voltage change for one tap = 396V at all taps and for 22 kV and 33 kV.

4.0 Losses

No load loss will be same for 33 kV and 22 kV since volts per turn (flux) is same in both cases. However load loss at 22 kV will be higher than at 33 kV. For example, test results for a 20 MVA transformer are given below:

Ratio	No load loss (KW)	Load loss (KW)
33 / 11 kV	12.17	74.81
22 / 11 kV	12.17	86.59

For normal design, load loss can be guaranteed at one ratio only. The loss at other ratio will change correspondingly. Refer Fig 4.

Let R be the resistance per N turns.

Load loss at 33 kV, $P_3 = I_3^2 \times 6\,N \times R$

Load loss at 22 kV, P_2

$= [2 \times I_2^2 \times N \times R] + [4 \times (I_2/2)^2 \times N \times R]$

$= I_2^2 \times 3N \times R$

$P_2 / P_3 = (I_2 / I_3)^2 / 2$

$= 1.5^2 / 2$

$= 1.125$

Load loss at 22 kV will be 12.5% higher than at 33 kV.

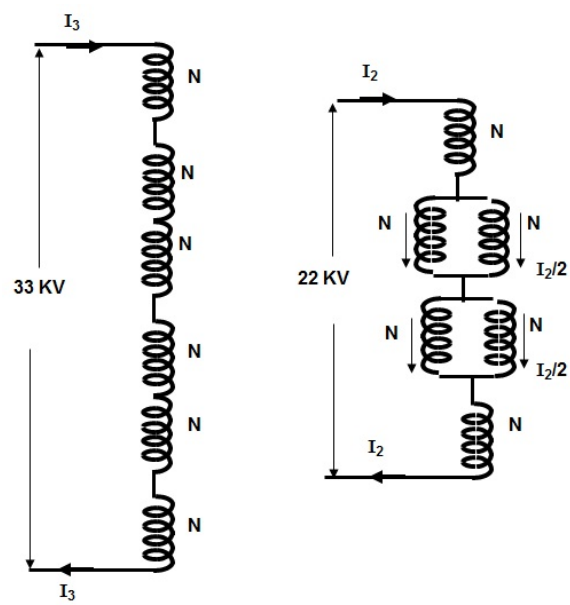

Fig. 4

It is possible to design a transformer with same load loss at 33 kV and 22 kV. This will be a special design in which part of the winding will have different cross section. Refer Fig 5.

The resistance of N turns of part winding is only 70% (0.7R). The corresponding increase in cross section is 43% (1/0.7 = 1.43).

Load loss at 33 kV, P_3

$= I_3^2 \times 4N \times R + 2 \times I_3^2 \times N \times 0.7R$

$= 5.4\ I_3^2 \times N \times R$

Load loss at 22 kV, P_2

$= [2 \times I_2^2 \times N \times 0.7R]$

$+ [4 \times (I_2/2)^2 \times N \times R]$

$= 2.4 \times I_2^2 \times N \times R$

$= 2.4 \times (1.5 I_3)^2 \times N \times R$

$= 5.4\ I_3^2 \times N \times R$

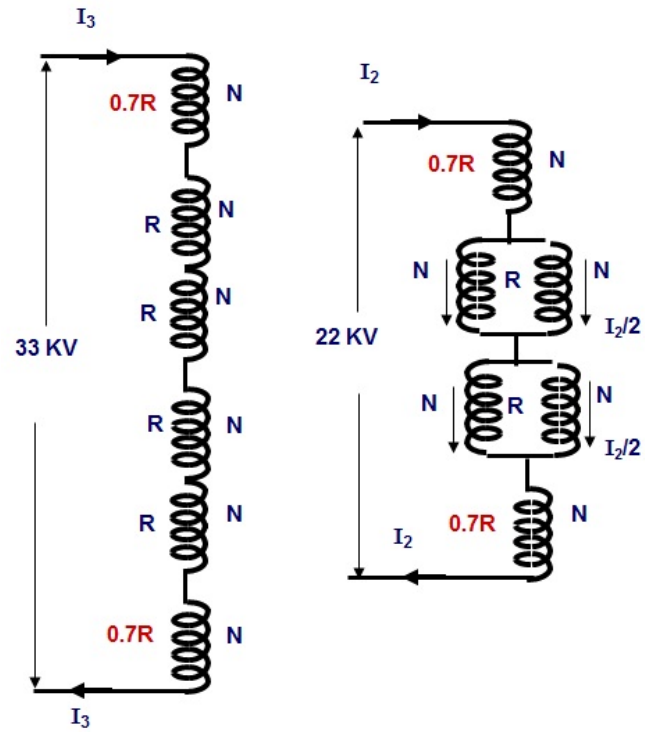

Fig. 5

Load losses at 33 kV and 22 kV are same. This is achieved by increasing the cross section of part of the winding. This will result in increased cost of transformer. Unless both ratios will be used for approximately same amount of time, it is not recommended to specify same load losses at both the voltage ratios.

5.0 Conclusion

Dual winding transformers are used only in special circumstances and intricacies involved are not generally known. The concepts behind dual winding transformer operation are explained here. This article will be very helpful to practicing engineers during specification stage.

Comments from Scrutineers' and Author's Replies

1.0 Scrutineers' Comment

The author should discuss the advantages and disadvantages of dual ratio transformer including cost, space required for installation etc; when compared to single ratio units.

Authors' Reply:

Dual ratio transformer is procured only in cases the applied voltage could be from any of two sources with different voltage levels. In this case, the same transformer could be used to connect two different voltage sources. The voltage selection (carried out in off line mode) is done easily, for example, using a rotating wheel (see Fig 6).

Fig. 6

There are no disadvantages that are specific only to dual ratio transformer.

Regarding the cost, the cost of 33-22/ 11 kV, 20/25 MVA dual ratio transformer is about 15% higher than the cost of 33 / 11 kV, 20/25 MVA single ratio transformer.

The foot prints for both transformers are nearly same and there is no significant difference. Approximate overall dimensions of the above transformers are 6.5 x 5.5 x 5.2 M (L x B x H).

ieema journal

Integrated View of Instrument Transformer and Protection Scheme

Dr K Rajamani (Reliance Infrastructure Ltd)
and Bina Mitra (Reliance Industries Ltd),
MUMBAI

(June 2014, TECH-IT 2014 Seminar, IEEMA, New Delhi,
Page IIB-26 to IIB-34)

INTEGRATED VIEW OF INSTRUMENT TRANSFORMER AND PROTECTION SCHEME

Dr K Rajamani (Reliance Infra. Ltd) and Bina Mitra (Reliance Industries Ltd), Mumbai

1.0 Introduction

Instrument transformers and protection relays are the key elements in a protection system. They are the two sides of the same coin. They are interdependent on each other for a successful fault clearance by a protection scheme. An instrument transformer with best specification alone or a best numerical relay or protection scheme alone will not help in successful fault clearance. An integrated approach in instrument transformer and numerical relay feature selection is required for a well-designed protection scheme.

With the evolution of numerical relays, the benefits can be best derived in selecting instrument transformer specification, optimising the quantity of Current Transformer (CTs), reduction in wiring and hardware for a given scheme. Judicious use of instrument transformer and numerical relay features can simplify protection system design. This paper gives an insight to the protection system designer into some of the concepts where numerical relay features can be used for simplifying and optimising the schemes. Following protection schemes are discussed further in this paper:

a) Busbar protection.
b) REF protection for transformers.

2.0 Defining Zones of Protection with CT location

Power system protection is arranged in zones. The zone of protection gets defined with location of CTs. Power system protection is engineered through overlapping zones to ensure that the power system is completely covered leaving no part unprotected. Refer Fig.1.

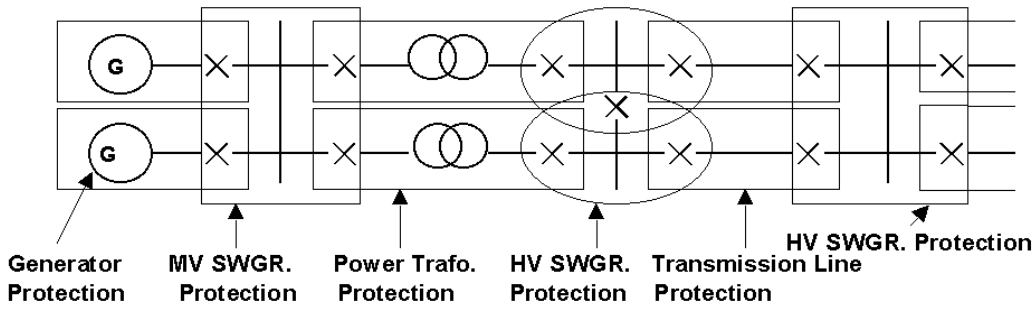

Fig. 1 Zones of Protection

June 2014, TECH-IT 2014 Seminar, IEEMA, New Delhi, Page IIB-26 to IIB-34

The concept is further explained with an example. Refer Fig.2.

Consider a typical delta –star transformer protected by the following protections. Each protection function has a specific zone of protection defined by the CTs used for that particular protection.

a) Differential protection (87) – Protected Zone is between CT-1 and CT-5.

b) Instantaneous overcurrent and earth fault protection (50/50N) - Protected zone is below CT-2 but limited only to delta side of transformer. Ref [1].

c) IDMT overcurrent protection (51) - Protected zone is below CT-2 covering the system on both sides of the transformer.

d) Restricted earth fault protection (64) – Protection zone is between NCT-2 and CT-4 covering the star side of the transformer.

e) Overcurrent (51) and earth fault (51N) - Protected zone is below CT-3 and covers only the downstream system on the star side of transformer.

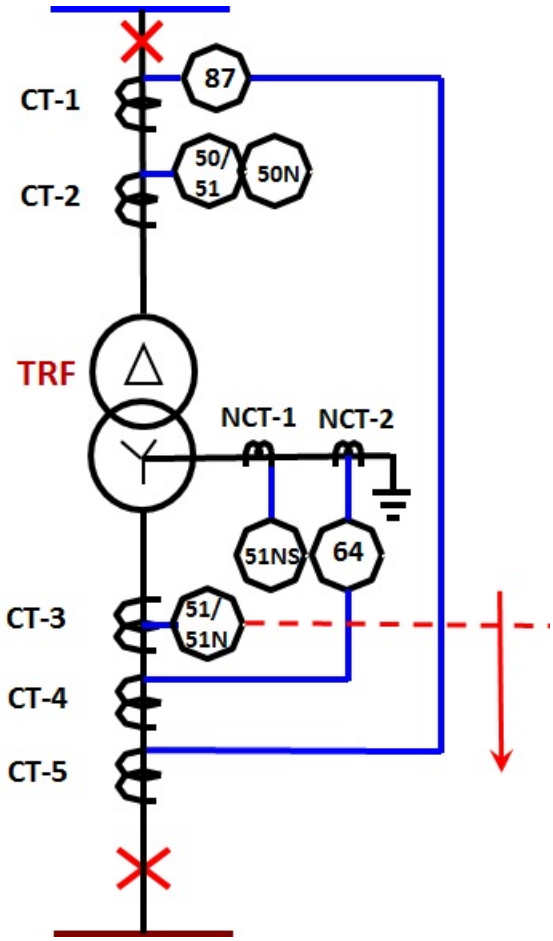

Fig. 2

f) Standby earth fault protection (51NS) –The zone is defined by NCT-1. It covers the star winding of transformer and the downstream system on the star side of transformer.

Refer Fig.3. Consider a case where the location of CT-3 and CT-5 is swapped. As seen in figure a blind spot or dead zone in created. This part of the system is not covered by unit protection. The phase fault in this zone is seen only by phase element 51 on delta side of transformer. Depending on the fault magnitude, the fault clearance time could be in seconds! The position of CT cores is not of much relevance when all the cores are in the same CT mould. However when different CTs are provided, the position of CTs have to be chosen carefully. It is therefore suggested that as a general rule the position of

CTs shall be decided such that almost every part / element in system is covered by a unit protection to ensure fast fault clearance. Selection of correct relay and right specification of CT *only* will not help fault clearance. The proper positioning of CTs is also equally important.

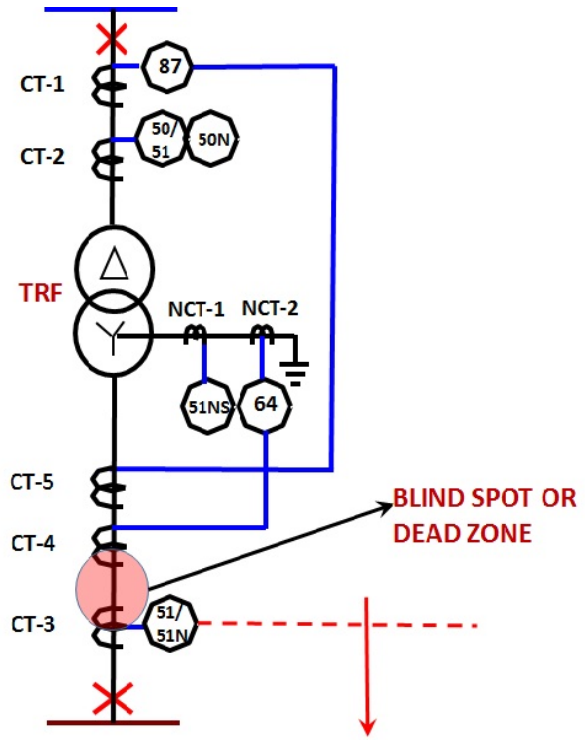

Fig. 3

3.0 Dead Zone protection in Numerical Busbar Protection

Refer Fig. 4. Consider a typical sectionalised switchboard with two sources and a

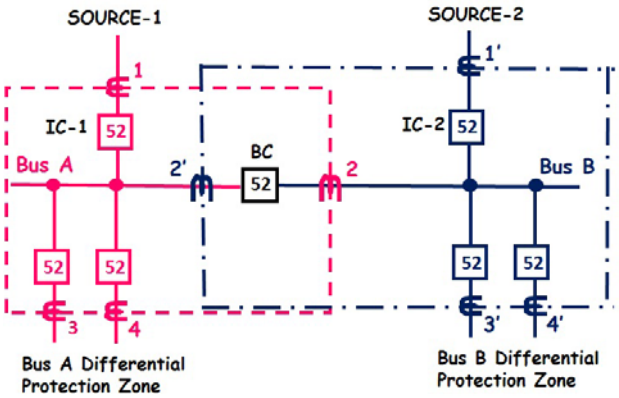

Fig. 4

buscoupler. The buscoupler divides the entire bus in two sections viz. Bus – A and Bus - B. The busbar differential protection for the bus is arranged to cover both the bus

sections. Bus A differential protection zone is defined by the CTs – 1, 2, 3 and 4. Bus B differential protection zone is defined by the CTs – 1', 2', 3' and 4'. As seen in Fig.5, the entire switchgear bus is fully protected with no blind zone. Both faults F1 and F2, lie in the overlapping zones of Bus A and Bus B differential protection. For faults F1 and F2, both the protection zones operate leading to shutdown of the entire bus.

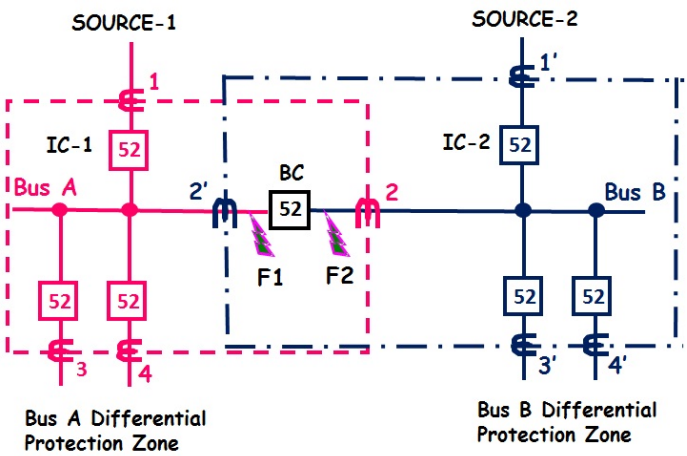

Fig. 5

Thus, the advantage of overlapping of protection zones is positive disconnection of faulty area / element. The disadvantage sometimes is that more breakers will be tripped than the minimum necessary to disconnect the faulty element. If there were no overlap, a failure in a region between zones would not lie in either zone and therefore no breaker will be tripped. The overlap is the lesser of the two evils. However many times it is not always possible to accommodate CT on both sides of the breaker particularly in metal enclosed medium voltage switchgears. CTs in some cases are located only on one side. Refer Fig 6.

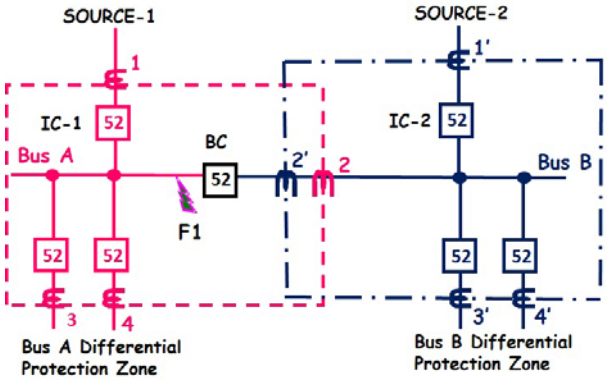

Fig. 6

For fault F1, bus bar protection A would operate and trip incomer -1 (IC-1) and buscoupler (BC) to clear the fault. But for fault F2 (Fig.7), the fault is fed by incomer-2

(IC-2) even when IC-1 and BC has tripped. Bus bar protection B sees this as through fault and will not operate. Such a point becomes a dead zone in busbar protection scheme. In numerical busbar protection relays, the blind zone created due to physical limitations is squarely addressed by dead zone protection. The positioning of CTs is not of serious concern.

The dead zone protection is achieved with a simple instantaneous overcurrent function and by monitoring of buscoupler breaker status. If the current is seen by the buscoupler CT (CT 2 and 2') even after opening of buscoupler breaker then a dead zone protection operates. It trips IC-2 to clear the fault. This ensures

(a) Entire section of bus bar is fully protected without blind spots.

(b) Necessary breakers operate to isolate only faulted section keeping the healthy section intact.

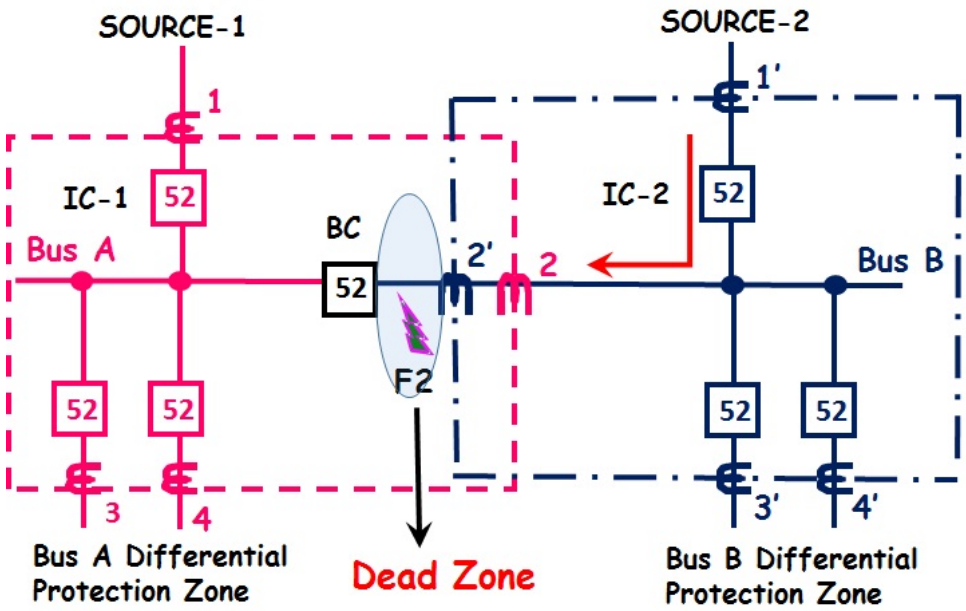

Fig. 7

Even if there is no physical limitation, it is not mandatory to locate CTs on either side of buscoupler for busbar protection. This is particularly relevant for EHV substations, AIS or GIS. CTs need not be located on both side of buscoupler breaker as given in Fig. 4. They can be on one side of buscoupler as in Fig. 6 with dead zone protection implemented in numerical relay. In some makes of busbar protection relay, dead zone protection is not available as an inbuilt feature. It can still be engineered with overcurrent function, breaker status and relay logics.

Even after careful positioning of CTs and with overlapping of protection zones there are some inherent dead zones in power system. These are usually the point between breaker and CT. The dead zone protection is basically developed to take care of faults between breaker and CT. Consider a transformer feeding a switchgear Bus-2. Refer Fig. 8.

Fault F is detected and cleared by busbar protection of Bus-2, 87B. Fault F, between the CT and breaker, is fed by the source even when the incomer breaker to switchgear Bus-2 is tripped by 87B of Bus-2. When current is seen by CT3 after opening of breaker to Bus-2, busbar protection 87B declares a dead zone fault. It trips the upstream breaker to clear the fault.

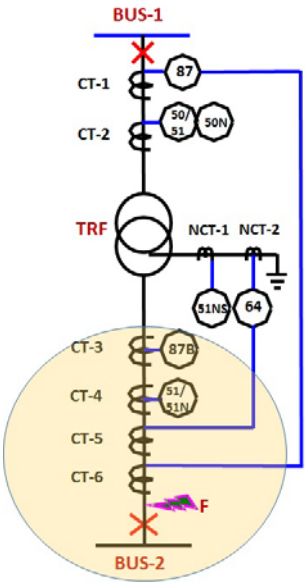

Fig.8

In case of outgoing lines from EHV switchyards, the remote end breaker is tripped by dead zone protection of busbar protection scheme to clear a fault between breaker and CT.

Refer Fig. 9. The fault F is detected by busbar protection scheme of Bus-2. Operation of busbar protection trips the breaker of Bus-2. Presence of current through CT after opening of breaker of Bus-2 indicates a dead zone fault. The operation of dead zone protection at Bus-2 trips the remote end breaker connected to Bus-1. This ensures fault feed from remote end is cut off when there is a fault between breaker and CT.

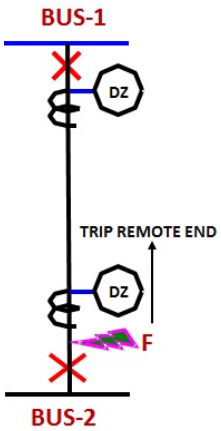

Fig. 9

With numerical busbar protection, the user gets the flexibility to choose different CT ratios for different feeders. However, it is strongly recommended to use the highest CT ratio for all the feeders for busbar protection unless there is a physical limitation. This is to limit the Knee Point Voltage (KPV) requirement for the busbar protection CTs. Few low end numerical busbar protection schemes use IPCTs as in conventional schemes. It is recommended to provide highest CT ratio for all feeders for busbar protection and avoid use of ratio matching IPCT. While selecting CT for numerical busbar protection scheme following may be considered:

a) Avoid use of IPCT for ratio matching as introduction of IPCT reduces scheme reliability.

b) Select highest CT ratio for bus bar protection for optimum CT design.

c) Check dead zone creation during design with the given CT position. If dead zone creation is unavoidable use dead zone protection feature instead of trying to locate CTs on both sides of the breaker.

4.0 REF protection for Transformers

REF protection operation and REF protection for LV systems has been discussed in detail in Ref [1], [2]. Certain aspects of REF protection for MV systems are also covered in Ref [2]. While engineering REF schemes for resistance grounded system, following aspects have to be taken care:

a) Through fault stability during phase faults.

b) Sensitivity for low earth fault currents.

Two types of REF protection can be implemented. These are:

a) High Impedance REF scheme.

b) Low Impedance REF scheme.

4.1 High Impedance REF scheme

In high impedance REF scheme, summated phase and neutral current are compared by hardwiring and the differential current is then given to relay. Refer Fig.10. A resistance is connected in series with the relay to ensure through fault stability. i.e., the scheme will not operate for faults external to protected zone. Refer [2] for more details.

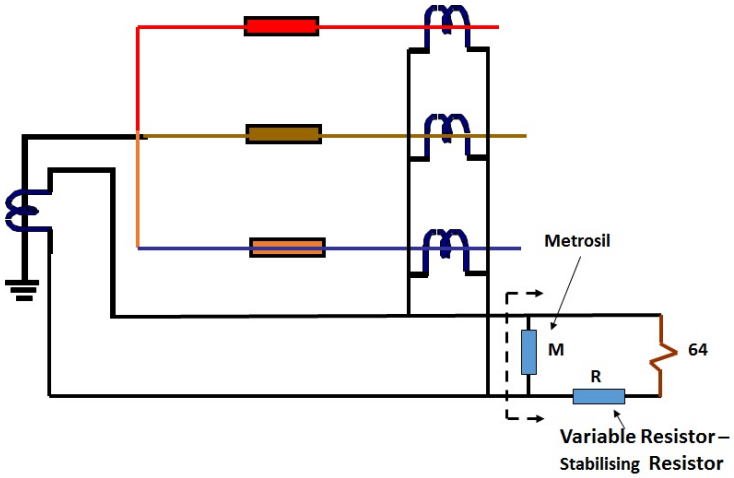

Fig.10 High Impedance REF scheme

4.2 Low Impedance REF scheme

In low impedance scheme (Refer Fig. 11) the relay compares the magnitude and phase of neutral current I_N against the sum of phase currents $3I_O = I_{L1} + I_{L2} + I_{L3}$. During internal faults, the residual phase current is nearly in phase (Residual current is zero when source is on one side) with the neutral current, hence the relay operates. During external fault conditions, the residual phase current is nearly of same magnitude and in

phase opposition with the neutral current. This prevents relay operation during external faults.

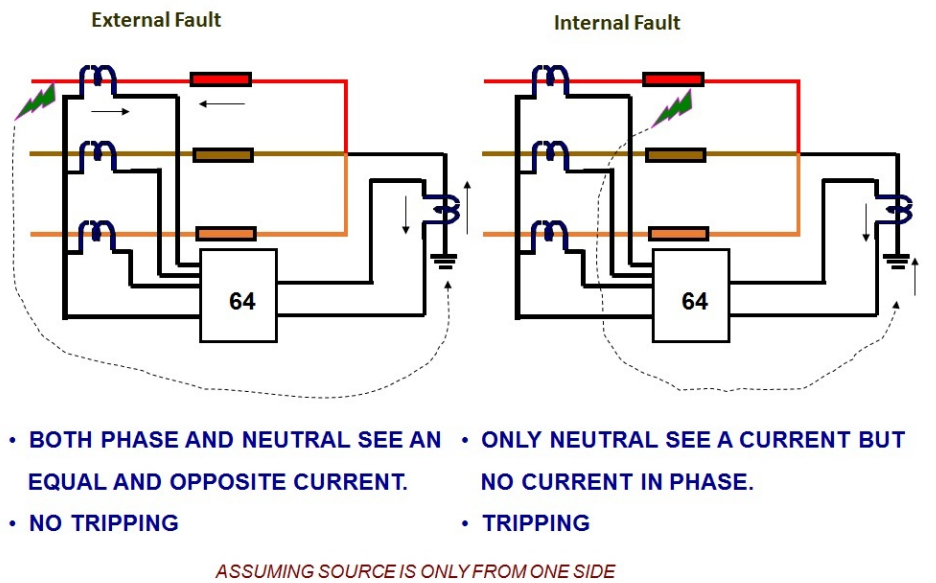

Fig.11 Low Impedance REF scheme

The relay is stabilized with a restraining current to avoid relay mal operation during heavy external faults due to CT saturation. However it may be noted that the methods adopted to stabilize a REF scheme is much different from those adopted for differential schemes.

The methods of biasing depend on the restraining quantity. The restraining can be done with two methods:

a) Residual current i.e., sum of phase currents.

b) Maximum of phase or neutral current.

The advantage of through fault stability of high impedance scheme can be maintained with proper restraint. The comparison of summated phase and neutral currents are done by the relay. Therefore all phase currents and neutral current have to be fed to the relay. IPCTs are not required even if phase and neutral CT ratios do not match as it can be taken care in software. Additional hardware of high impedance REF scheme like stablising resistor, metrosil, IPCT for resistance grounded system are not required. For few relays, the ratio of mismatch between phase CT ratio and neutral CT ratio that can be provided is limited. In such cases, neutral CT ratio can be selected slightly higher than the system earth fault current without sacrificing sensitivity.

4.3 REF for solidly grounded system

For solidly grounded system where the earth fault current is very high, the phase side and neutral side CTs can be of same ratio. Since phase CTs and neutral CT are of same ratio, interposing CT (IPCT) is not required for ratio matching. Usually high impedance REF scheme is preferred option for solidly grounded system. The CT requirement for a high impedance REF scheme of a solidly grounded system is explained with an example below:

a) Data

Transformer Voltage Rating = 33/6.6 kV

Transformer MVA Rating = 25 MVA

Transformer Impedance = 10%

Phase and neutral side CT ratio (CTR) = 2500/1A

CT resistance: R_{CT}= 12 Ω; Lead resistance, $2R_L$ =1.5 Ω

b) CT Requirement

Assume a worst case of phase to earth fault with one CT saturated for KPV evaluation. One healthy CT on phase side has to develop enough voltage to drive the current through neutral CT. Refer Fig.12.

Assuming infinite source

Fault MVA of the transformer = Transformer rating / Impedance

= 25 / 0.1

= 250 MVA

Through fault current, $I_F = 250/(\sqrt{3} \times 6.6)$

= 22 kA

Voltage developed across CTs, $V_R = I_F*(R_{CT}+2R_L) / CTR$

= 118 V

Minimum KPV for phase and neutral side CTs = $2 \times V_R$

= 236 V

KPV of phase and neutral side CT = 250V

The KPV requirement for phase and neutral CT is same. However the magnetizing curve of phase and neutral CTs need not exactly match. Ref [3]. Phase and neutral CTs need not be sourced from the same manufacturer.

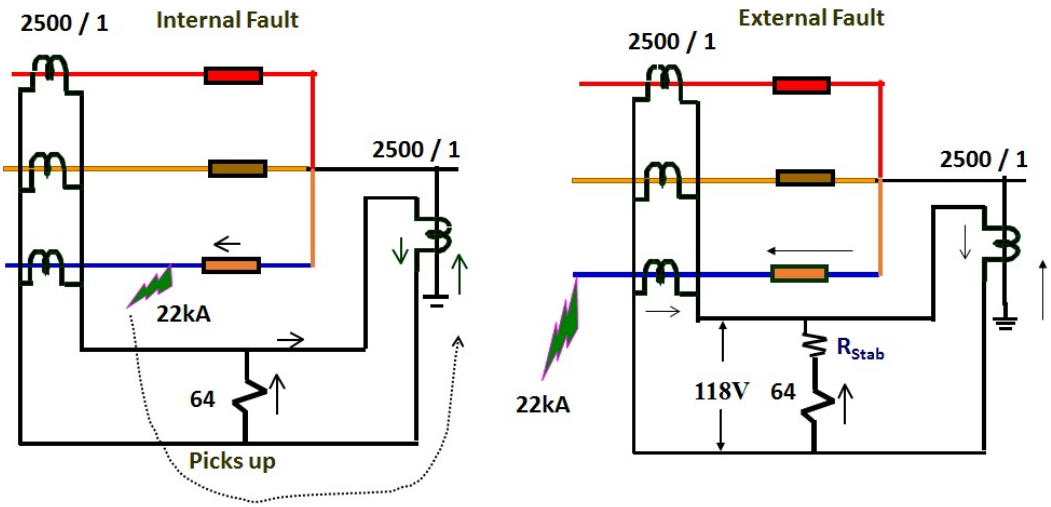

Fig.12 REF scheme for Solidly grounded system

c) Summarising for Solidly grounded system

i) Phase side CT and neutral side CT can have same ratio selected based on rated phase current of transformer.

ii) IPCT is not required.

iii) Phase to earth fault current to be used in KPV calculations for phase and neutral CT.

4.4 REF for resistance grounded system

Medium voltage systems have low resistance grounded system where the earth fault current is limited to about 100 - 400A. High impedance REF scheme for resistance grounded system can be implemented in two ways.

In one case, phase and neutral CT have dissimilar ratios. The phase CT ratio will be much higher corresponding to rated load current whereas the neutral CT ratio is chosen lower corresponding to restricted earth fault current to improve sensitivity. IPCT is required for current matching.

In the other case both phase and neutral CT ratio are same. The CT ratio is selected based on rated load current of transformer. IPCT is not required. The two cases are discussed below in detail with their merits and demerits.

4.4.1 Case 1: High impedance REF scheme with IPCT for Resistance grounded system with fault current restricted to 250A (Refer Fig 13)

a) Data

Transformer Data as given in Cl 4.3 a)

Phase side CT ratio (CTR) = 2500/1A, Neutral side CT ratio = 250/1A,

Aux. CTR = 0.1/1A;

Neutral CT resistance: R_{CT} =1 Ω;

Phase CT resistance: R_{CT} =12 Ω;

Lead resistance, $2R_L$ =1.5 Ω;

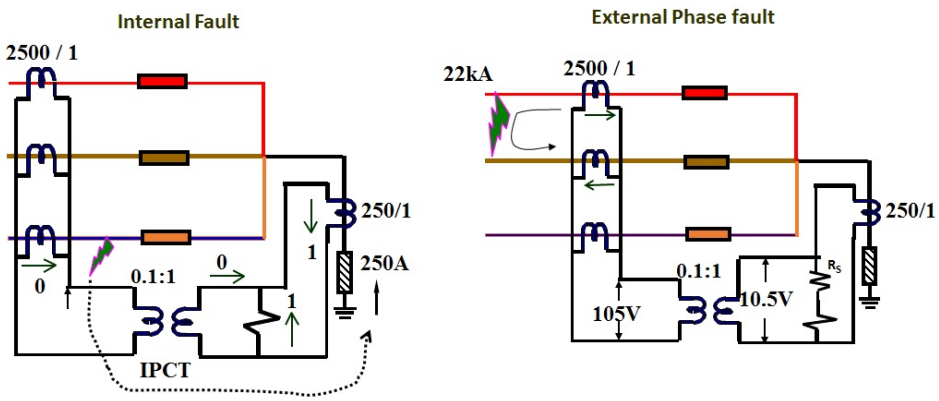

Fig.13 REF scheme for Resistance grounded system with IPCT

b) CT Requirement

i) Voltage developed during phase fault across phase and Neutral CT

We assume a worst case of phase to phase fault and one CT saturated. Therefore, one healthy CT has to develop enough voltage to drive the current through another CT which offers passive resistance of 12 ohm.

Assuming infinite source,

Fault MVA of the transformer = Transformer rating / Impedance

= 25 / 0.1

= 250 MVA

Through fault current, $I_F = 250/(\sqrt{3} \times 6.6)$

= 22 kA

Voltage developed across phase side CTs, $V_F = I_F \times R_{CT} / CTR$

= 105 V

Voltage developed across relay, $V_R = V_F \times$ Aux.CTR

= 10.5 V

In this case the IPCT is transforming the voltage developed by phase CT during through fault to lower voltage i.e., 10.5 volts. Based on the voltage appearing across neutral side of IPCT, stabilizing resistor is selected so that relay does not operate for through phase faults. Refer Fig.13

ii) Voltage developed during earth fault across phase and neutral CTs

Voltage developed across neutral side of CT, $V_F = I_F (R_{CT}+2R_L) / CTR$

= 2.5 V

Voltage developed across phase side CT = V_F/ Aux.CTR

= 25 V

iii) Knee Point Voltage requirement

Minimum KPV for phase side CTs = $2V_R$

= 210 V

KPV of phase CT = 250V

Minimum KPV for neutral side CTs = $2V_R$

= 21 V

KPV of neutral CT = 30V

4.4.2 Case 2: REF scheme without IPCT for Resistance grounded system with fault current restricted to 250A (Refer Fig 14)

a) Data

Transformer Data as given in Cl 4.3 a)

Phase and neutral side CT ratio (CTR) = 2500/1A

CT Resistance: R_{CT}=12 Ω;

Lead resistance, $2R_L$ =1.5 Ω;

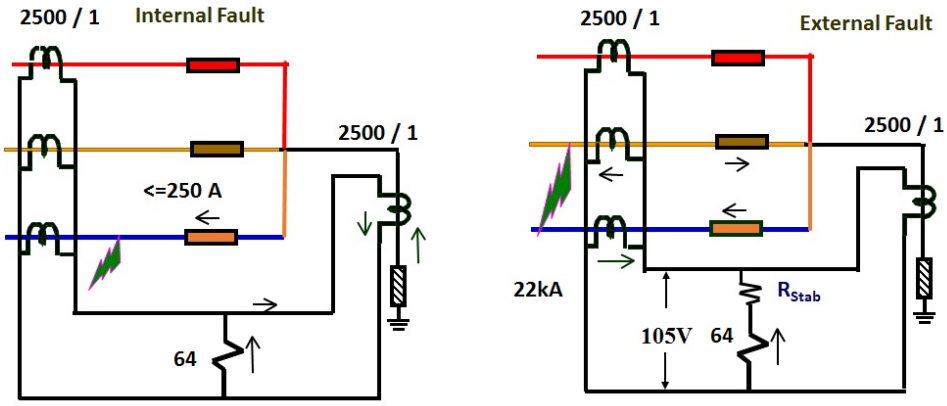

Fig.14 REF scheme for Resistance grounded system without IPCT

b) CT Requirement

We assume a worst case of phase to phase fault and one CT saturated. Therefore, one healthy CT has to develop enough voltage to drive the current through another CT which offers passive resistance of 12 ohm. The CT requirement for this case is same as in Case-1. The stabilizing resistor value is selected based on the voltage developed across the relay during through faults. Depending on the setting of the REF protection a high value of stabilizing resistor is required. Use of high value of stabilizing resistor results in high

voltage during internal faults. Though metrosil is provided for protection against these high voltages, it is not a good practice to use very high value of stabilizing resistor.

4.4.3 Case 3: Using Low Impedance REF

With deployment of numerical relays, low impedance REF can be another alternative for implementing REF protection of transformer with resistance grounding. As explained in Cl 4.2 earlier, low impedance REF can be sensitive and at the same time stable for through faults. CT requirements for low impedance scheme shall be as per relay manufacturer recommendations.

4.4.4 Summary for Resistance grounded system

a) Neutral CT ratio shall be suitable for the system earth fault current to ensure sensitivity.
b) Phase side CT ratio shall be suitable for rated phase current. Suitable IPCT to be provided to match phase CT and neutral CT ratio.
c) For CT sizing, phase fault current shall be considered.
d) Phase CT and neutral CT ratio should not be selected based on the rated phase currents. It has implications on the following (Refer Cl 4.4.2, Case-2):
    i) Sensitivity of the scheme is not ensured.
    ii) Stabilising resistor value required for through fault stability against external phase faults is abnormally high.
e) Low impedance REF shall be used to reduce hardware like IPCT, metrosil, stabilizing resistor.

As seen above numerical relay features like low impedance REF can help in simplifying protection scheme design and optimize CT requirement.

5.0 Common conceptual fallacy in IPCT reflected impedance

Interposing CTs are widely used in two situations:

a) The rated current is different from CT secondary current like 1A CT to be connected to 5A relay.
b) Current comparison protection schemes like Differential and REF schemes. Refer Fig 15 shows the current distribution from an experiment where AT are fed from only one side of IPCT. The burden connected on secondary side of IPCT is 1.68Ω. The primary current of IPCT is 2.A while the secondary current is only 3.42A due to saturation of IPCT. Nearly 6.58A (2x5 – 3.42) is consumed as IPCT excitation current. The reflected impedance on primary side is 42Ω (5^2x1.68). A very important point to note is that though the current transformation is far from

ideal (3.42/2 = 1.71 instead of 5) voltage transformation is not too far away from ideal (27.6/5.3 = 5.2 instead of 5).

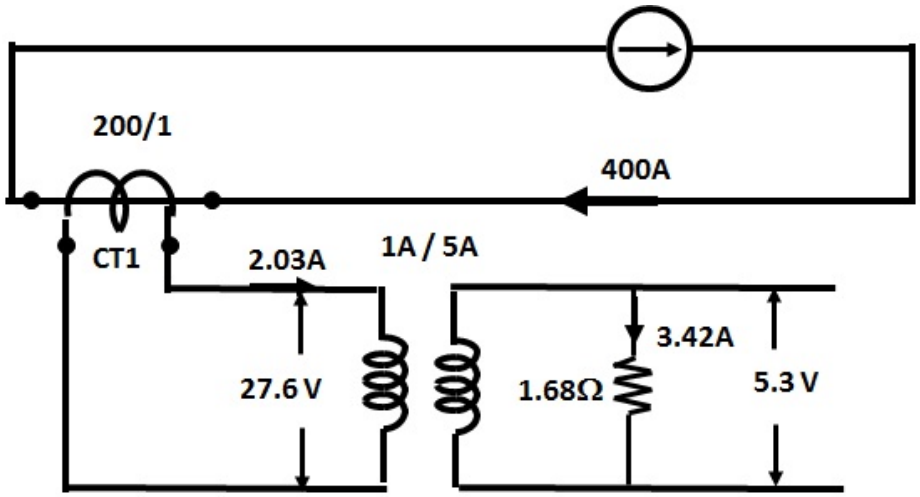

Fig. 15

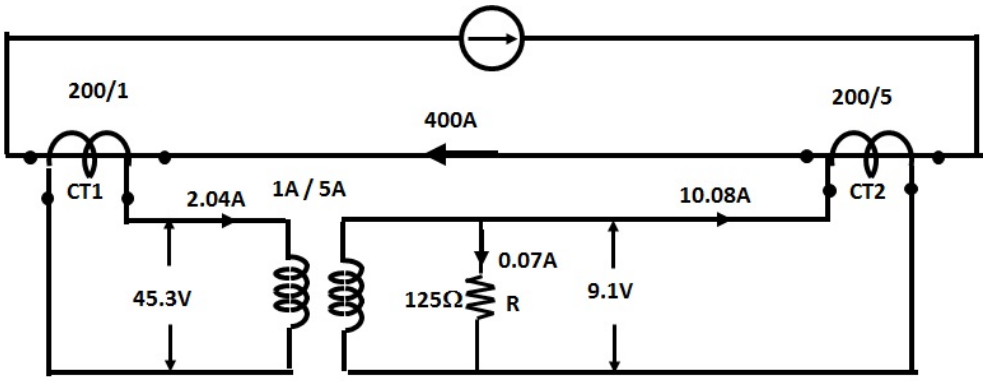

Fig. 16

Refer Fig 16 shows the current distribution from an experiment where AT are fed from both sides of IPCT. The burden connected on secondary side of IPCT is 125Ω (typical value of stabilising resistor used in high impedance differential schemes). The interesting point to note is that both the current transformation (10.08/2.04 = 4.94) and voltage transformation (45.3/9.1 = 4.8) are nearly equal to ideal value of 5. This is achieved in spite of the presence of high resistance on secondary side of IPCT. This brings out an important fact that concept of reflected impedance in case of IPCT should be applied with care. i.e., it is valid only when ATs are fed from only one side of IPCT and not when ATs are fed from both sides of IPCT. Otherwise none of the high impedance differential or REF schemes with stabilising resistor will work.

(The tests were conducted by Gopala Kannan, Sachin Suryavanshi and Mangesh Sardal and their contribution is acknowledged).

The other salient point to note is that voltage transformation across any CT will be always ideal under any conditions since mutual flux is common to both windings and this is irrespective of any burden connected across the winding. But the current transformation can vary widely from ideal depending on level of saturation. This is the reason why voltage measurement method is preferable compared to current measurement method for ratio check of CTs (Refer [4] for more details).

6.0 References

[1] "Protection of Low Voltage Auxiliary Transformer and Switchgear", Dr K Rajamani and Bina Mitra, December 2013, IEEMA Journal, Page 114 to 120.

[2] "Restricted Earth Fault Protection Practices", Dr K Rajamani, January 2006, IEEMA Journal, Page 92 to 95.

[3] "Realistic Specification for Current Transformer", Dr K Rajamani and Bina Mitra, January 2006, Tech-IT Seminar, Page I-22 to I-28.

[4] "Instrument Transformer Testing at site", Dr K Rajamani and Bina Mitra, August 2008, IEEMA Journal, Page 61 to 72.

ieema journal

Application of Capacitors in Electrical Power Systems

Dr K Rajamani (Reliance Infrastructure Ltd)

and Bina Mitra (Reliance Industries Ltd),

MUMBAI

(November 2014, CAPACIT 2014 Conference,
IEEMA, New Delhi, Page 177 to 183)

Application of Capacitors in Electrical Power Systems

Dr. K Rajamani and Bina Mitra

Reliance Infrastructure Ltd. & Reliance Industries Ltd., Mumbai

1.0 Introduction

Capacitor and inductor are the two basic passive linear elements in power system network. They are twin brothers with mirror image properties. In this article, fundamentals of capacitor and reactive power from power engineer's point of view are introduced. Capacitor performance during various switching scenario is presented in detail. Some finer points during practical implementation are brought out. Application of capacitors for surge protection of rotating equipment is discussed. Finally a novel method of stability testing of EHV transformers using capacitors is given.

2.0 Fundamental Principle

Any sudden change in the network results in redistribution of electromagnetic energy stored in capacitor and inductor, often leading to transients. Two basic laws that govern the transient behaviour of inductor and capacitor are:

The magnetic energy stored in inductor is (1/2) Li^2. Current through inductor cannot change instantly i.e., $L\ (di/dt)$ can't be infinite.

Corollary - Voltage across inductor can change instantly. This concept is used in fluorescent lamp to initiate the arc by breaking the current through the choke.

The electrostatic energy stored in capacitor is (1/2) Cv^2. Voltage across capacitor cannot change instantly i.e., $C(dv/dt)$ can't be infinite.

Corollary - Current through capacitor can change instantly. Theoretically it could be infinite (very high). This is the reason for flow of inrush current during capacitor switching.

3.0 Concept of Reactive Power and Reactive Power Compensation

The concept of reactive power is brilliantly explained in Ref [1]. Any electric circuit is always a combination of resistance, inductance and capacitance. Refer Figure 1 and its associated table.

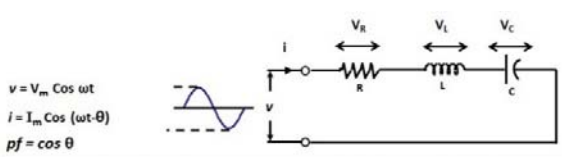

Instantaneous power = $V_m I_m \cos\omega t \cos(\omega t-\theta)$	
$= (1/2)V_m I_m \cos\theta(1+\cos 2\omega t)$ + $(1/2)V_m I_m \sin\theta \sin 2\omega t$	
Instantaneous active power $(1/2)V_m I_m \cos\theta(1+\cos 2\omega t)$	Instantaneous reactive power $(1/2)V_m I_m \sin\theta \sin 2\omega t$
Average active power $P = VI\cos\theta$ Called simply active power	Average reactive power $= 0$ Usually ignored
Amplitude instantaneous active power $VI\cos\theta$ Usually ignored as it is simply P	Amplitude instantaneous reactive power $Q = VI\sin\theta$ Called simply reactive power

Figure 1 Active and Reactive Power

November 2014, CAPACIT 2014 Conference, IEEMA, New Delhi, Page 177 - 183

As seen there are two components in instantaneous power. One is called the "Active power". Averaging of instantaneous active power is called Active Power $=V\ I\ cos\theta$. Refer Figure 2.

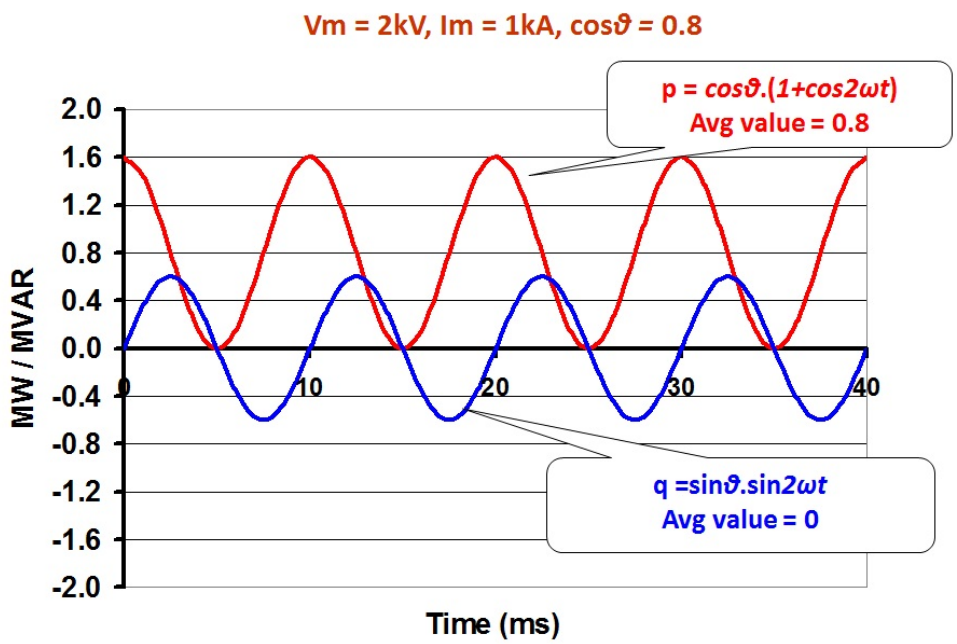

Figure 2 Inst. Active and Reactive Power

As seen average of instantaneous active power is always positive and symmetric above zero. It does the useful work. Another component is called the "Reactive power". Average of instantaneous reactive power is zero. Reactive power $=V\ I\ sin\theta$ is the *maximum* value of instantaneous reactive power (0.6 in Fig 2). It is the energy stored in the circuit inductance and capacitance. Physically it implies what the system delivers in one half cycle, inductance / capacitance delivers back to system in next half cycle. If this is the case, what is meant by reactive power loss and reactive compensation? Refer Figure 3.

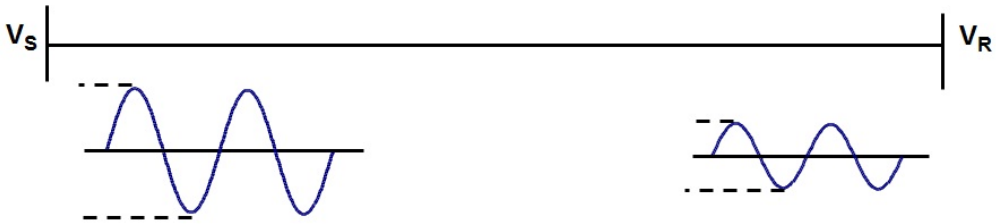

Figure 3 Loss in Amplitude while delivering Reactive Power

Instantaneous reactive power waveforms at sending end and receiving end are shown. The decrease in *amplitude* while delivering reactive power is termed as reactive power loss. The purpose of reactive compensation is to arrest the drop in this amplitude.

4.0 Power Factor Correction and Reactive Compensation

The basic Power Flow Equation in power system is given below:

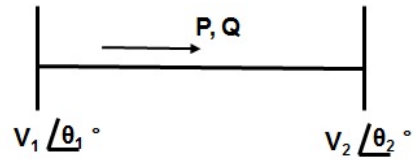

Figure 4

$$\left[\frac{\Delta P}{\Delta Q}\right] = \begin{bmatrix} J_1 & J_2 \\ J_3 & J_4 \end{bmatrix} \left[\frac{\Delta \theta}{\Delta V}\right]$$

$\Delta P = J_1 \Delta\theta + J_2 \Delta V$

$\Delta Q = J_3 \Delta\theta + J_4 \Delta V$

In majority of practical cases, $J_2 << J_1$ and $J_3 << J_4$.

This leads to familiar Decoupled Power Flow equation:

$\Delta P = J_1 \Delta\theta \Rightarrow$ P - θ Loop

$\Delta Q = J_4 \Delta V \Rightarrow$ Q – V Loop

The second relationship is the corner stone for reactive compensation to achieve Voltage improvement.

Most of the electric loads are inductive in nature. They act as sink for reactive power. Reactive losses in transformers and feeders are the other sinks for reactive power. As seen above, reactive power flow strongly influences the voltage levels across the network. Therefore, voltage levels and reactive power flow must be carefully controlled to allow a power system to be operated within acceptable limits. While active power can be transferred over hundreds of kilometres, reactive power cannot be transferred even over a shorter distance without encountering voltage problems. Generators alone cannot meet the reactive power demand in the system, because they are primarily meant for supplying active power; transport of reactive power from generating station to load centres is not practical. Higher reactive losses, if uncompensated, tend to drag the voltage below stipulated limits. The efficacy of transformers taps in voltage control is limited because they draw more reactive power from upstream sources to improve the downstream voltage. The remedy is to provide reactive shunt compensation at all voltage levels locally using capacitor banks. Reactive compensation at distribution level is discussed in Ref [2].

5.0 Transients during Capacitor Bank Switching

5.1 Ideal transient free switching

For transient-free switching, inductor should be switched on when voltage is passing through maximum, and capacitor should be switched on when voltage is passing through zero. In practice, point on wave switching is easy to achieve for reactor but very difficult for

capacitor. The slope of sine wave is very small near maximum and very high near zero. An error of 1 msec in closing at "maximum-voltage" point will result into closing at 95% of voltage maximum ($\sin 72^o = 0.951$). Whereas, an error of 1 msec in closing at "zero-voltage" point will result into closing at an instant when voltage is not zero but 31% of maximum value ($\sin 18^o = 0.309$). Refer Figure 5.

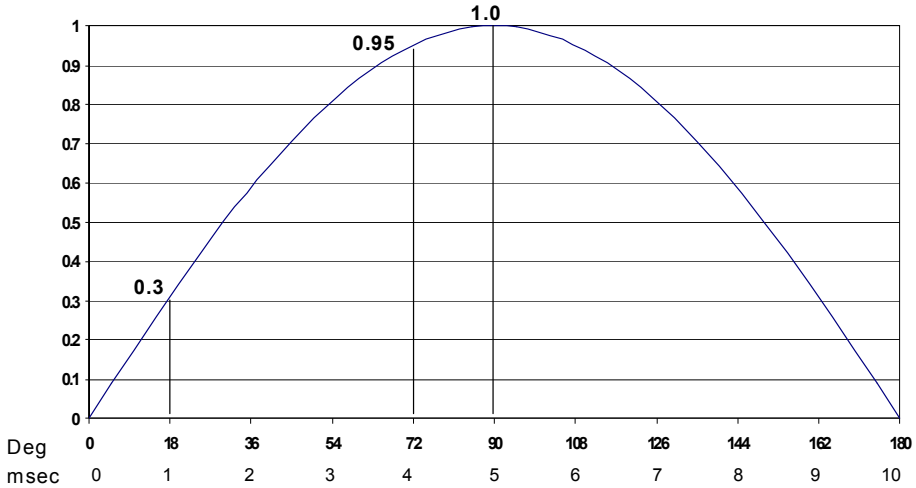

Figure 5 Error in Point on Wave Switching

5.2 Simulation of ideal capacitor switching

Consider a shunt capacitor of ratings

14.65 MVAR, 33 kV, I_{RAT} = 254 A RMS;

$X_C = 33^2 / 14.65$

$= 74.3345\ \Omega$;

$C = 1 / (2 \times \pi \times f \times X_C)$

$= 42.8198\ \mu F$,

$X_C / R = 500$, $R = 0.1487\ \Omega$,

Time constant RC = 0.1487 x 42.8198

= 6.38 μsec.

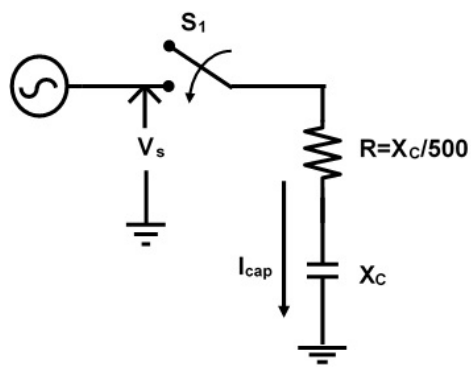

Figure 6 Ideal Capacitor Switching

The network is shown in Figure 6 with ideal source.

The source voltage waveform is shown in Figure 7.

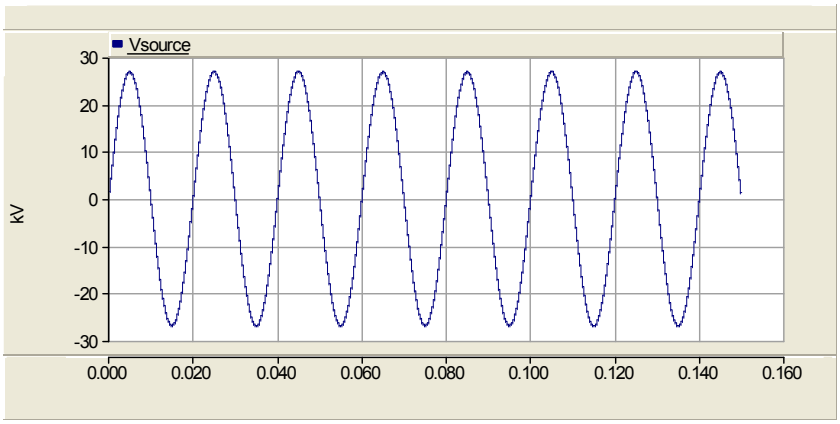

Figure 7 33kV Source Voltage (Phase Voltage)

Current corresponding to switch closing at t=0.02 sec near Voltage zero is shown in Figure 8. No transient inrush current is observed in case of switching at voltage zero instant.

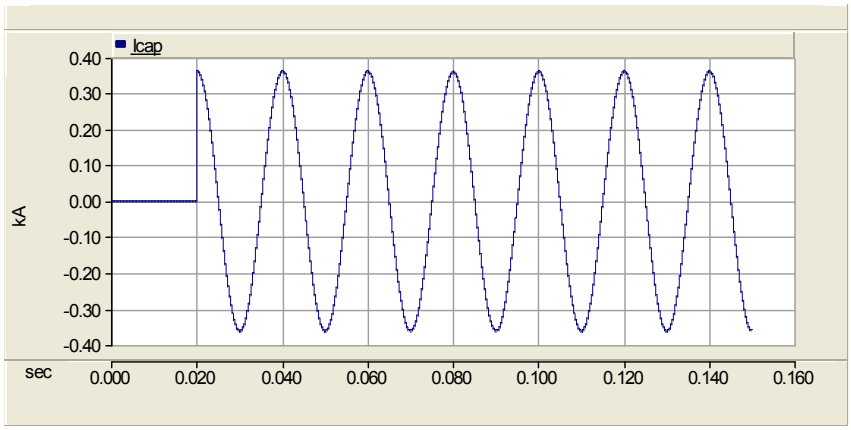

Figure 8 Inrush Current for Voltage Zero Switching

A very high inrush current is seen when switch is closed at 0.025 sec near Voltage maximum. Refer Figure 9.

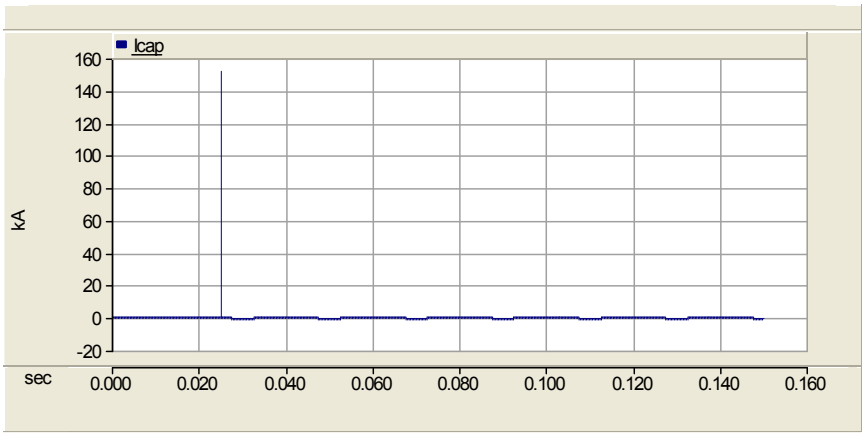

Figure 9 Inrush Current for Voltage-Max Switching

5.3 Switching of capacitor with small inductor to reduce inrush current

To reduce inrush current a small inductor (1%) is introduced in series with the capacitor.

$X_L / X_C = 0.01$ (1%)

$X_L = 0.01 \times 74.3345$

$= 0.7433\ \Omega$

$L = X_L / (2 \times \pi \times f)$

$= 0.0024$ H

The network for simulation is shown in Figure 10. Inrush currents corresponding to voltage-zero and maximum instant are shown in Figure 11 and Figure 12 respectively. It may be noted that inrush current is limited; but transients persist for more time compared to case without reactor.

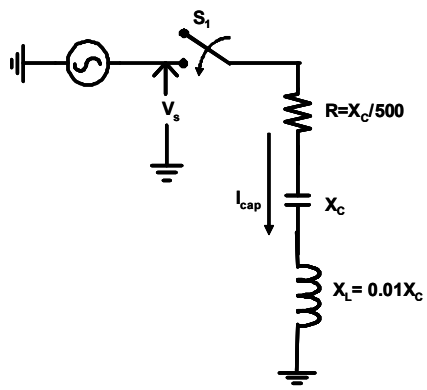

Figure 10 Capacitor with Small Inductor

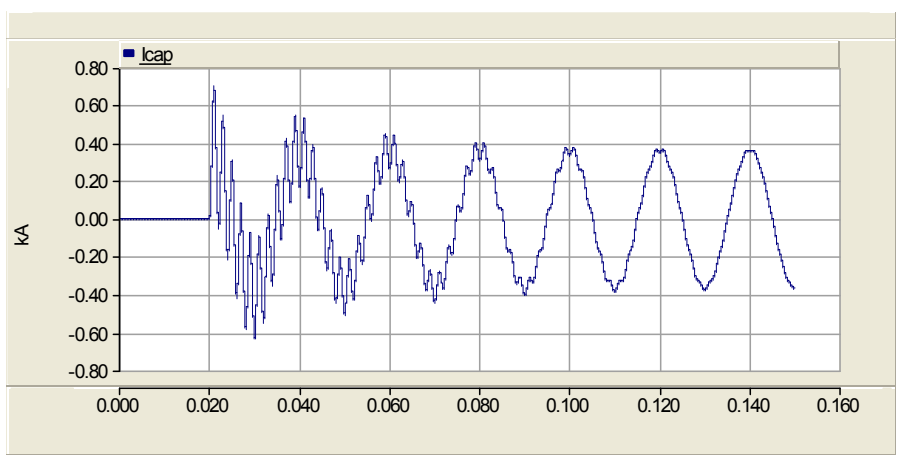

Figure 11 Switching at Voltage Zero

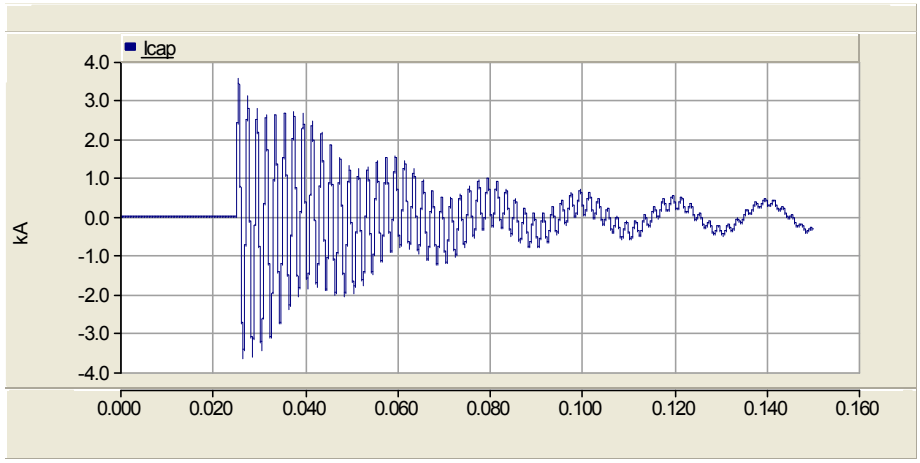

Figure 12 Switching at Voltage Maximum

5.4 Back to Back Capacitor Switching

Many times one capacitor is already in service and another capacitor in parallel is switched on. Consider two identical capacitors (of same rating as considered in previous example i.e. C = 42.8 μF, L = 0.0024 H, R = 0.1487 Ω) connected to 33kV source with source impedance of 1.452 Ω and X/R = 20 as shown in Figure 13.

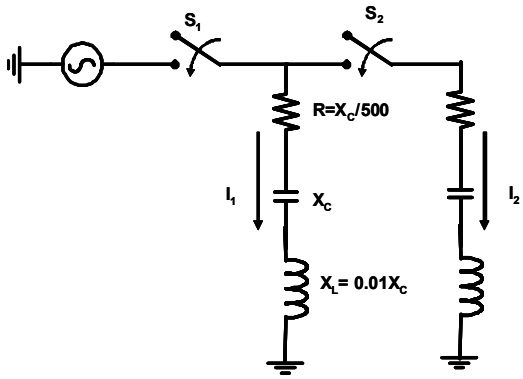

Figure 13 Back To Back Capacitor Switching

Switch S_1 is closed at 0.205 sec (Voltage max) and S_2 is closed at 0.805 sec (Voltage max). The inrush currents I_1 and I_2 are shown in Figure 14. The maximum values of I_1 and I_2 are found to be 2.35 kA and 2.81 kA.

It demonstrates that the inrush current is higher if there is already another parallel capacitor in service. In the example I_2 is higher than I_1 by about 20%.

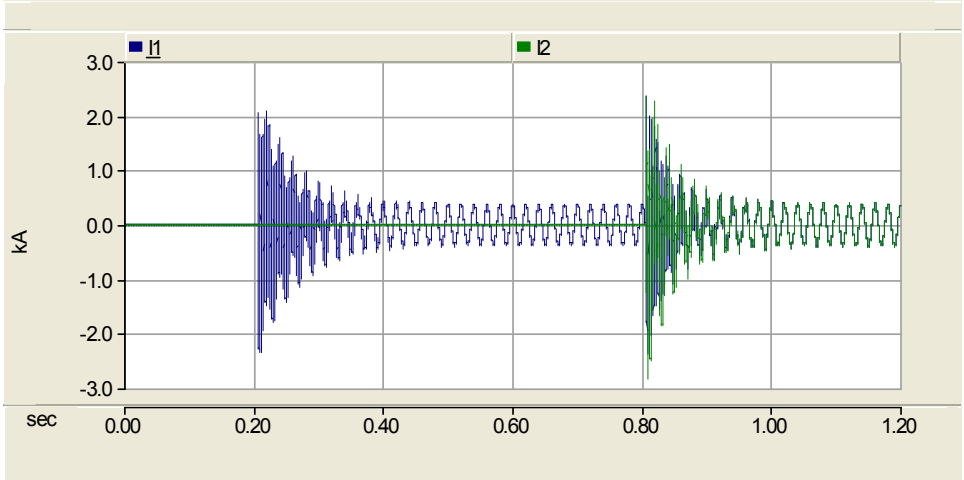

Figure 14 Inrush Current for Back-to-Back Capacitor Switching

Site measurements of voltage and current during switching ON of 11kV, 5MVAR capacitor bank is indicated in Figure 15. It has a reactor of 0.5%. The rated current of capacitor is 262A (rms) and 371A (peak). Maximum value of peak recorded current during switching ON is 1500A (400% of rated peak current). Transients died down in less than 3ms.

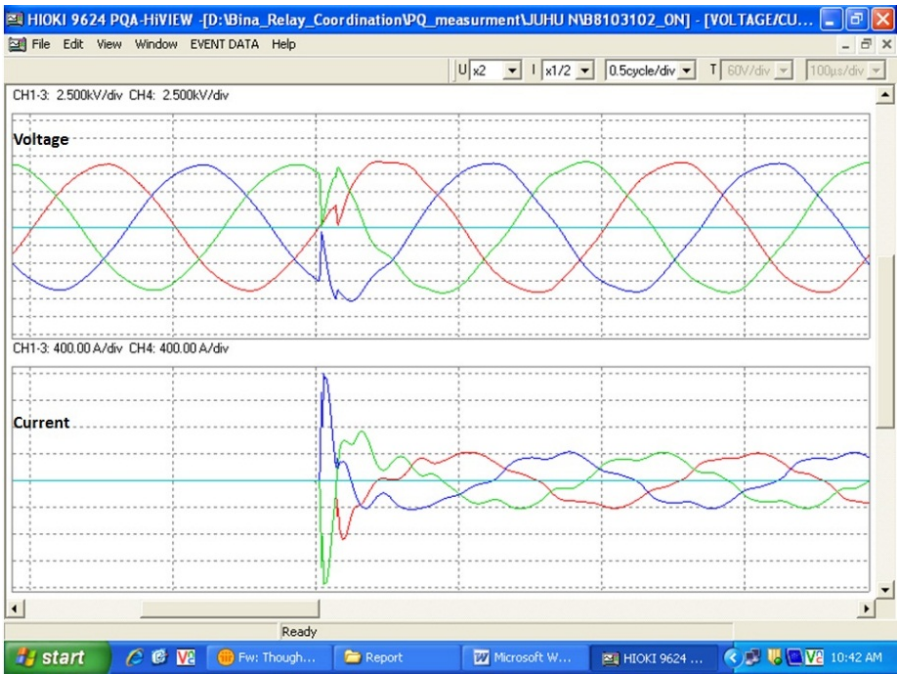

Figure 15 Voltage and Current Waveforms during Capacitor Switching ON

6.0 BIL of Inrush Limiting Reactor

In the capacitors with a small reactor connected towards neutral side, the steady state voltage across reactor is very small. But during switching high voltage appears at the reactor terminal. Network for simulation is shown in Figure 10.

33 kV Capacitor switching is simulated at t = 0.105 sec, when source voltage is passing through maximum. The source voltage and voltage at the reactor terminal are shown in Figure 16.

During steady state, the voltage at reactor terminal is very small, i.e., $V_L = 0.01 \times V_P = 0.19$ kV rms. However, during switching, the peak voltage across reactor may rise up to $\sqrt{2} \times 19$ kV. Hence, the reactor must have the *same BIL* as that of the capacitor.

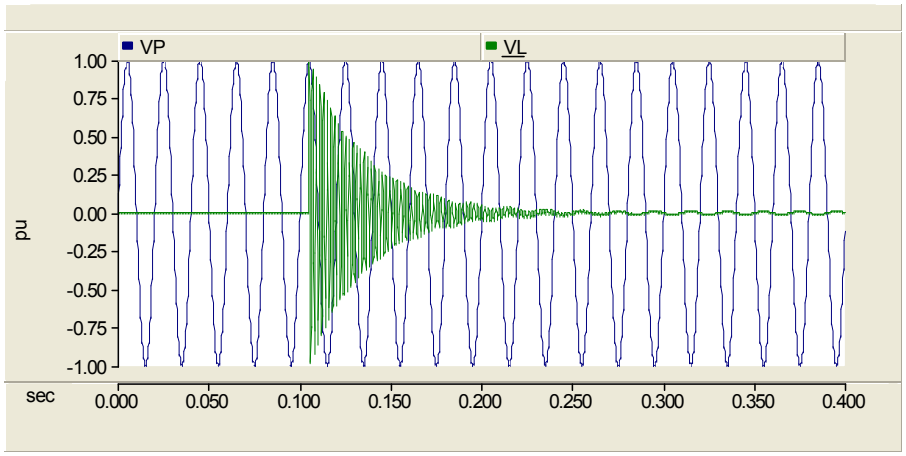

Figure 16 Reactor Terminal Voltage during Switching

7.0 APFC Switching Studies

Capacitor banks are also provided at 415V for reactive compensation. Typically, 415V APFC capacitor bank consists of 6 stages of 25 kVAR and 6 stages of 50 kVAR, the total rating of each bank being 450 kVAR. Depending on the power factor of the load, capacitor stages are switched in steps of 25 or 50 kVAR units automatically.

When switched on, a capacitor draws heavy transient inrush current, the magnitude of which is highest when switching is done at the instant when voltage is passing through its maximum. This inrush current gets further *amplified* if there are other capacitor stages of the bank already in service. To limit this inrush current of incoming capacitor, a small inrush limiting inductor coil is used in series with the capacitor. Studies were conducted to assess the magnitude of inrush current with and without the inrush limiting inductor coil. Further, the amplification of inrush current is also studied if there are a number of capacitor stages already in service. The network from 415V source to capacitor bank is modelled in PSCAD software on a single phase basis. The switching simulations have been done under following conditions.

a) Switching of a 25 kVAR capacitor stage. No other capacitor stages is in service.

b) Same as case (a) with inrush limiting inductor

c) Switching of a 25 kVAR capacitor stage. Other 11 stages (6 stages of 50 kVAR + 5 stages of 25 kVAR) in service.

d) Same as case (c) with inrush limiting inductor.

e) Switching of a 50 kVAR capacitor stage. No other capacitor stage is in service.

f) Same as case (e) with inrush limiting inductor.

g) Switching of a 50 kVAR capacitor stage. Other 11 stages (5 stages of 50 kVAR + 6 stages of 25 kVAR) in service.

h) Same as case (g) with inrush limiting inductor.

Typical PSCAD ouputs for Case (a) and case (c) are given in Figures 17 and 18. The test results are summarized in Table 1. 1 pu = 56A for 25 KVAR and 112 A for 50 KVAR.

Case No.	Cap. being Energized in kVAR	Inrush limiting Inductor (Y/N)	Other 11 stages present (Y/N)	Peak Inrush Current (pu)
a)	25	N	N	18.135
b)	25	Y	N	16.583
c)	25	N	Y	64.795
d)	25	Y	Y	33.449
e)	50	N	N	12.914
f)	50	Y	N	11.757
g)	50	N	Y	51.378
h)	50	Y	Y	23.338

Table 1

From the above, following is concluded:

a) The presence of inductor coil does reduce the magnitude of inrush transient current.

b) The magnitude of inrush current is amplified two times if other capacitor stages are already in service and inrush limiting inductors are present [Compare cases (b) and (d); cases (f) and (h)].

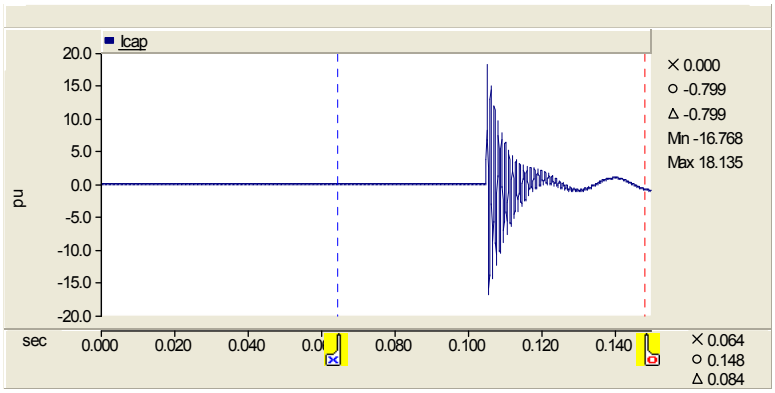

Figure 17 Inrush current for Case (a)

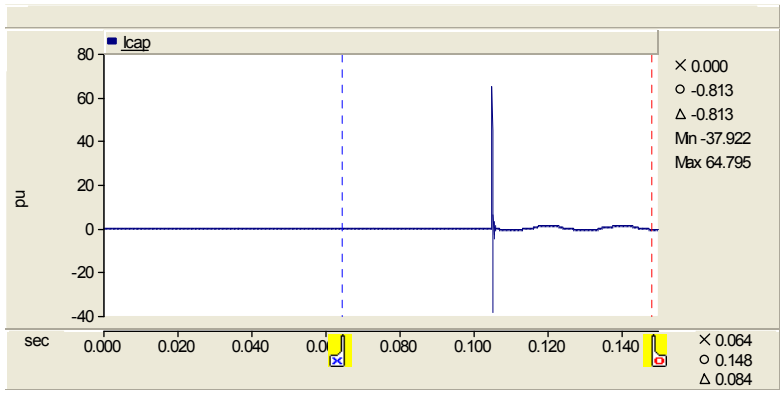

Figure 18 Inrush current for Case (c)

The presence of other capacitor stages in service not only increases the inrush current of incoming capacitor, but it also produces recurrence of inrush current in the existing capacitor stages. The inrush current of incoming capacitor (I_{switch}) and the magnitude of re-appearing inrush current in existing capacitor (I_{ss}) is a function of the number of capacitors already in service. As the number of existing capacitors increases I_{switch} increases whereas I_{ss} decreases. For simplicity, six stages of 50 kVAR capacitors are considered and each stage is switched on such that when first stage is switched on there will be no existing capacitor stage, when second stage is switched on, there will be one capacitor stage already in service and so on. When the sixth capacitor is switched on, there will be five capacitor stages already in service. The magnitudes of I_{switch} and I_{ss} in per unit are tabulated below in Table 2.

From the above, following is concluded:

Depending on the number of capacitor stages already in service, each one of them will experience inrush current (I_{SS}) whenever a new stage is switched on. Fewer the number of existing stages, higher this inrush current.

C1	C2	C3	C4	C5	C6	I_{switch} (pu)	I_{ss} (pu)
Switched	NA	NA	NA	NA	NA	11.757	NA
Avail.	Switched	NA	NA	NA	NA	14.966	15.677
Avail.	Avail.	Switched	NA	NA	NA	17.833	9.744
Avail.	Avail.	Avail.	Switched	NA	NA	19.486	6.942
Avail.	Avail.	Avail.	Avail.	Switched	NA	20.625	5.343
Avail.	Avail.	Avail.	Avail.	Avail.	Switched	21.464	4.327

Table 2

Recording at site during APFC switching is shown in Figure 19.

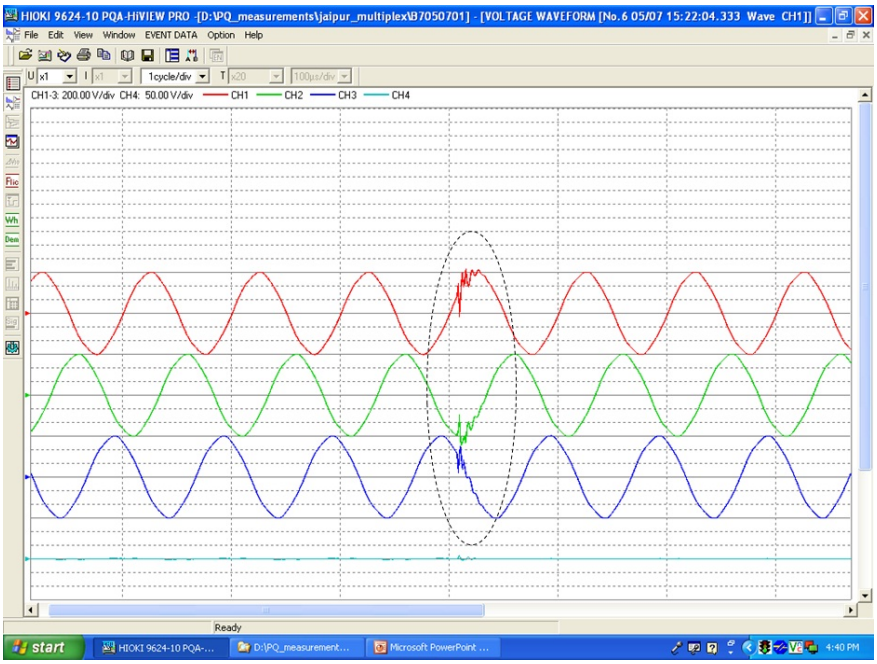

Figure 19 Voltage Waveform during APFC Switching

Too sensitive settings for APFC unit may lead to frequent switching transients that may affect delicate electronic equipment connected to the bus. Also the equipment shall be designed to ride through spikes caused by APFC switching operations. This is especially true for APFC panels located within individual consumer premises.

8.0 Detection of Single-Phasing in Capacitor Feeder

If single phasing occurs on a capacitor feeder, it is difficult to detect as over current relays will not respond. Consider the circuit shown in Figure 20.

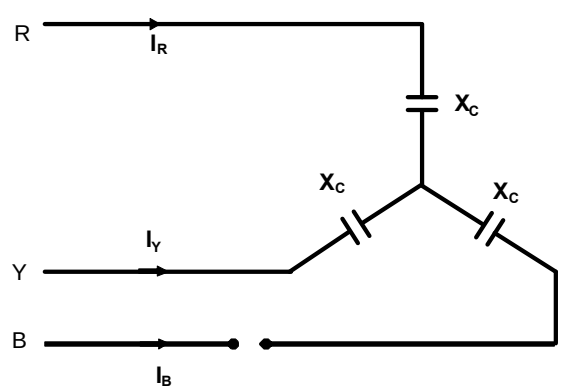

Figure 20 Single-Phasing in Capacitor Feeder

Under normal condition

$$I_1 = I_R = I_Y = I_B = \frac{V_P}{X_C}$$

$$MVAR_1 = \frac{3V_P^{\ 2}}{X_C}$$

Under one phase open condition

$$I_2 = I_{RY} = \frac{\sqrt{3}V_P}{2X_C} = 0.866I_1$$

$$MVAR_2 = \frac{3V_P^{\ 2}}{2X_C} = 0.5MVAR_1$$

Hence under one-phase open condition, line current will reduce to 86.6% and VAR delivery will drop to 50%.

Since over current protection will not pick up, the condition can go undetected for a long time with capacitor supplying only 50% percent of its capacity, thus not achieving the desired voltage improvement and power factor correction.

SCADA is implemented in Reliance Mumbai Distribution system. In SCADA, unbalance in line currents is evaluated for every feeder including capacitor feeder. If the unbalance exceeds a set value, say 30%, it gives an alarm to operator for manual action. In this way, single phasing in capacitor feeder will not go undetected.

Incidentally during SCADA implementation, for capacitor feeders, only the current and KVAR shall be logged and displayed. KW shall be forced to zero. It is not possible to accurately measure KW in capacitor feeder at site. Expensive tan delta measuring equipment like Schering bridge is used rather than conventional meters for this purpose in works.

Similarly measuring KW and KWHr in unloaded EHV cable (basically a capacitor) feeder using conventional meters will give highly erroneous readings. If the measured current is less than a specified current, KW and KWHr readings shall be forced to zero to avoid ambiguity in interpretation.

9.0 Surge Capacitor

Windings of rotating machines are at risk due to steep fronted over voltages, particularly the end turns towards line terminals. A capacitor with surge arresters provide surge protection against sudden voltage rise/surge.

In case of generator, a capacitor and surge arrestor combination is used for surge protection of windings. It is of the order of 0.125 μf or 0.25 μf. A typical surge capacitor application used for winding protection against high voltages is shown in Figure 21.

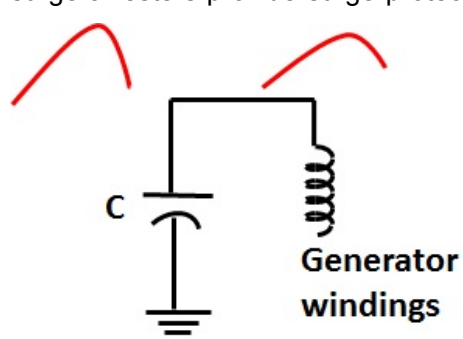

Figure 21 Surge Capacitor

In Generator Circuit Breakers, capacitors are used either on one side or on both side of breaker to limit the transient voltage recovery voltage (TRV) within acceptable limits. The voltage refraction and reflection of steep wave-fronts are minimised due to capacitor, and high frequency re-strikes are eliminated. GCB with surge capacitor on both the sides is shown in Figure 22.

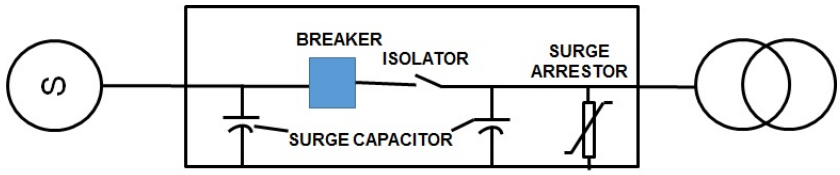

Figure 22 Generator Circuit Breaker

In case of MV motor, a RC combination with surge arrestor is used for surge protection of windings. A typical surge protective device is shown in Figure 23. The principle of working of this surge protective device is that the impedance of the capacitive elements is very high for 50 Hz. It effectively "disconnects" the resistor under steady state conditions. Under high frequency transient conditions, the impedance of the capacitive elements is low with respect to the resistive elements, effectively "inserting" the resistor in the power system. Thus the surge capacitors help to reduce the steep fronted waves and prevent damage to the turn-to-turn insulation.

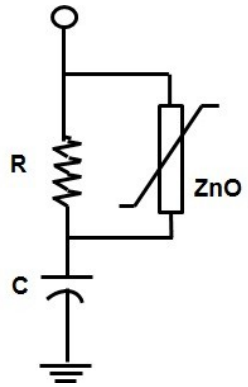

Figure 23 RC with Surge Arrestor

10.0 Capacitor for Stability Test of Transformer

Transformers are provided with differential and restricted earth fault (REF) protections depending on MVA and voltage ratings. As a part of commissioning tests, stability and sensitivity checks are done at site. The scheme testing at site is done by applying 415V on HV side of transformer with LV side of transformer shorted. Often testing engineers face difficulty while testing protection schemes of EHV transformers. When 415V is applied on 220kV side of transformer, the magnitude of resulting test current is too low and poses problems during stability check of the schemes. One way to increase the test current is to

reduce the impedance presented to testing source. Since the object under test (transformer) is almost a reactance, it can be partly compensated by a capacitance in series. Refer Figure 24.

The test current with capacitors is almost 10 times the current without series capacitor leading to more reliable scheme checking. This has been successfully demonstrated in Reliance Mumbai transmission. Details are given in Ref [3]

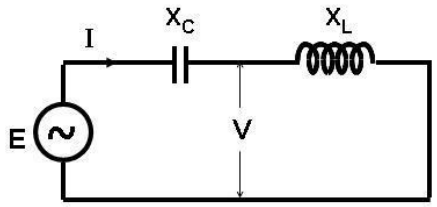

Figure 24 Test Circuit

11.0 Acknowledgement

Capacitor switching studies were carried out by Bodhlal Prasad using PSCAD. We have been greatly benefited from the discussions with Dr Venkatesh on capacitor selection and sizing for stability testing of transformer.

12.0 References

[1] 'Reactive Power: A Strange Concept?' - R Fetea and A Petroianu, University Of Cape Town, South Africa.

[2] 'Reactive Compensation Fundamentals for Distribution Networks' - K Rajamani and Bodhlal Prasad, IEEMA Journal, Aug 2009, pp 112- 115.

[3] 'Methods to control current during testing of REF and Differential schemes at site', - K Rajamani and Bina Mitra, IEEMA Journal, Sep 2013, pp 82 – 87.

ieema journal

POWER QUALITY OVERVIEW – PRACTICAL ASPECTS

Dr K Rajamani,

Reliance Infrastructure Ltd., MUMBAI

(May 2016, IEEMA Journal, Page 73 to 78)

POWER QUALITY OVERVIEW – PRACTICAL ASPECTS

Dr. K Rajamani
Reliance Infrastructure Ltd., Mumbai

1.0 INTRODUCTION

Power quality has gained increased importance in power industry in the last two decades. The proliferation of sensitive electronic devices and sophisticated automation equipment in ICE (Information, Communication & Entertainment) driven modern economy calls for a "*Good Quality Power Supply*". The question which immediately comes to our mind is what we mean by "*Quality Power Supply"*? From a utility point of view it may be defined as reliable and continuous power supply. From a user perspective quality power may be defined as *uninterrupted* power supply at specified voltage and frequency with minimum distortion from sinusoidal waveform that will ensure proper functioning of his equipment. Users are now more informed of power quality issues as the failure of highly sensitive process control / electronic devices has severe consequences in terms of time and cost. However an utility is a part of large integrated power system spread geographically over vast area and user has to be aware what the utilities can deliver *practically* considering external disturbances (mostly weather related) and internal failures(equipment forced outages). In brief, utility can't supply GWs of UPS quality of power and the user must factor this into account when he designs his internal system.

In the last two decades vast number of articles have appeared on Power Quality issues covering voltage variations like sags, swells and interruptions, transients, flicker, supply unbalance and of course the most dreaded word – Harmonics. IEEE Std 519 has become a Swiss Army Knife used by customers, regulators and utilities to enforce 'Harmonics Discipline' as per their interpretation. The focus of this article is not so much on stating the fundamentals which are well known but on knowledge and practical experience derived from data based on actual measurements done at site.

May 2016, IEEMA Journal, Page 73 to 78

2.0 Voltage dips

This is one of the frequent problems faced by many users. The user complaint is that the voltage dip in utility supply results in tripping of critical equipment and stoppage of process. However dips caused due to faults in power system can't be avoided. In highly meshed integrated power network, faults in one part of system causes voltage dips in other neighbouring parts of system. The first step towards mitigation is to measure the dips. Reliance supplies power to Mumbai consumers through Mumbai Distribution Business (MDB). Distribution is done at 11kV and 0.415kV level. Bulk power is brought to Mumbai at 220kV by Mumbai Transmission Business (MTB) of Reliance and further stepped down to 33kV for supply to distribution system. Power Quality Cell was established in MDB in 2005. PQ meters (PQ-ID A-eberle) were installed at strategic stations feeding high end consumers to monitor 11kV voltage. Later PQ meter was installed at 220kV bus of one of the transmission stations of MTB to monitor grid voltage. Any dip exceeding 10% is instantly captured. The readings are downloaded every month, analysed and a report is generated every month. Sample report for 220kV monitoring is shown in Tables 1 & 2. Similar report is generated for dips in 11kV. If any customer complaints regarding dip in supply voltage, the PQ meter data is useful in identifying source of problem. Typically one dip per day can be expected in utility distribution system. The duration of dip depends on quality of protection system functioning in utility. In Reliance network, EHV faults are generally cleared within 80 msec and MV faults are cleared within 120 msec. This gives a clue to the customer that equipment in his premises should have the capability to ride over these transients which are unavoidable. In design stage, the customers should plan for a ride through of at least 300 msec. It may be emphasized that the customers should do a comprehensive audit of equipment and identify which part of equipment *really* needs ride through facility. In a sophisticated production process only the controllers may be vulnerable and may require ride through capability / UPS supply. Conventional auto-change over schemes (break before make) may suffice in majority of cases. In this way quality power is ensured at minimum cost.

Sr No	Dec-2015	Numbers	Remarks
1	No of dips > 10%	13	0.42 dips per day
2	No of dips > 20%	9	69% of total
3	No of dips due to external faults	10	77% of total
4	No of dips due to internal faults	3	23% of total

Table 1

Sr No	Date	Time	Phase	Prefault Vol in kV	Postfault Vol in kV	% Vol Dip	Duration msec	Location	Remarks
1	08-12-15	00:17:29	R-N	130.96	25.9	80.22	90	Internal	220kV Aarey-Borvili line fault
…….	…….	…….	…….	…….	…….	…….	…….	…….	…….
6	10-12-15	19:52:22	Y-N	130.55	82.84	36.55	70	External	Bus fault at Padge
…….	…….	…….	…….	…….	…….	…….	…….	…….	…….
13	31-12-15	18:10:12	B-N	132.49	91.61	30.86	90	External	400kV Kalwa1 – Padge line fault

Table 2

In some customer installations, it is found that voltage spikes are induced by internal equipment. For example, at a particular location voltage spikes due to APFC switching is shown in Fig 1. Almost 1000 incidents were recorded by PQ meter (Hioki) in 14 hour period, i.e. almost one incident every minute. It is desirable in these cases to increase the 'dead band' and reduce APFC switching incidents.

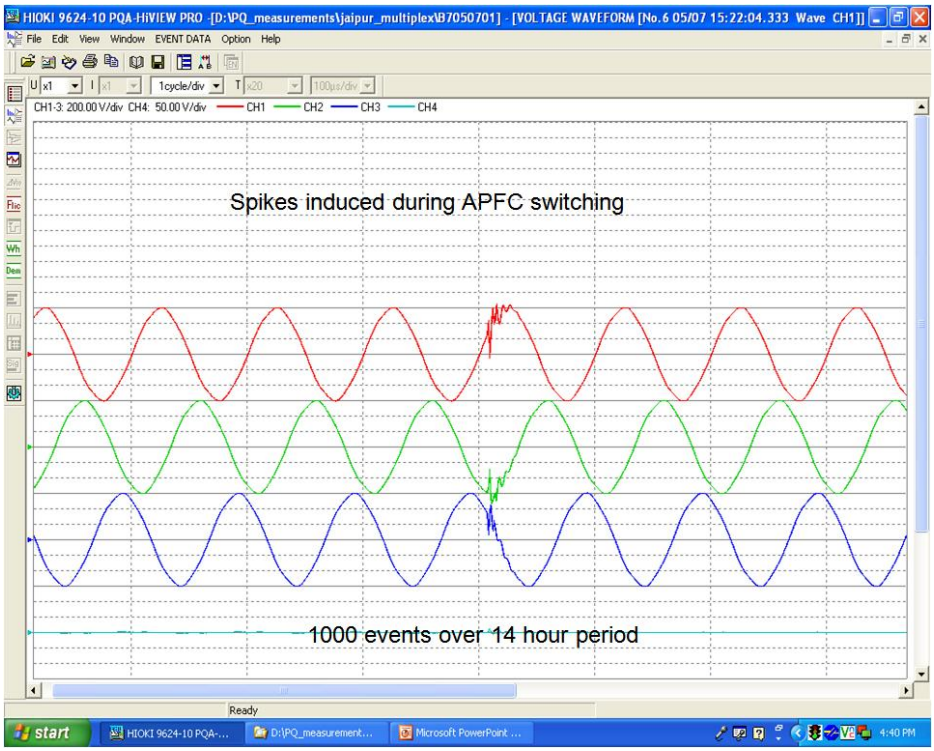

Fig 1

3.0 Harmonics

Pre 1980s, 'Ferro-resonance' was used as scapegoat to apportion blame on unexplained electrical disturbances. Now this is replaced with 'Harmonics'. From inadvertent tripping to increase in losses is attributed to harmonics. To really understand what is happening in the field is to deploy the PQ analyser and capture the data. Some of the case studies from field data are presented here.

3.1 Derating of Transformer capacity for harmonic loading at IDC

Two major effects of harmonics are:

(i) Increased RMS current and hence increased copper loss.

$$I_{RMS} = \sqrt{\sum_{H=1}^{N} I_H^2 H^2}$$

The effective current is significantly higher than only fundamental current.

(ii) Increased eddy current loss due to flow of induced currents in winding, core and other conducting bodies subjected to magnetic flux. This loss is proportional to $I^2 f^2$.

The procedure outlined below is based on "IEEE Std C 57.110 - IEEE recommended practice for establishing transformer capability when supplying non-linear load". The first step is to establish 'K factor'. It is defined as follows:

$$K_F = \frac{\sum I_H^2 H^2}{\sum I_H^2}$$

For pure sinusoidal waveform, K_F = 1. Higher the value of K_F, higher is the harmonic content. Most of the PQ meters directly display K_F phase wise. From K_F, Eddy current loss factor (P_{EC}) is obtained using standard graphs. The average values of P_{EC} for different values of K_F are given in Table 3. Derating Factor (D_F) is given by:

$$D_F = \sqrt{\frac{1+P_{EC}}{1+P_{EC}K_F}} \quad .....(1)$$

K_F	1	2	3	4	5	6	7	8	9	10
P_{EC}	1.0	0.94	0.89	0.85	0.81	0.78	0.75	0.72	0.7	0.68

Table 3

To verify the adequacy of transformer capacity to supply non-linear loads, PQ meter was deployed in an IDC (International Data Centre) at Mumbai which has large population of non-linear loads. Readings were taken on a 11/0.415kV, 2000KVA transformer feeder. The measured K factor is 10. From Table 3, P_{EC} = 0.68. From Eqn (1),

D_F = 0.46

The permitted loading on transformer = 2000 x 0.46 = 920KVA.

With the existing harmonic loads, the transformer loading is restricted to less than 50% of name plate rating. At site, the readings of WTIs embedded in dry type transformer windings were very high even though the transformer was not fully loaded. Extra fans were installed to augment the cooling.

The lesson is that if equipment gets overheated (transformer, busbar, etc) even though operating within name plate rating, the immediate step to rule out harmonic effects is to deploy PQ meter and measure K Factor. If it is below 2, it is not of immediate concern; otherwise further studies are required. When taking the measurements, the loading should be at least 25% to get meaningful results.

3.2 Effect of traction load on power quality

Supply to traction for Mumbai Metro is given at 33kV. PQ meter is installed on feeder supplying to traction substation of Mumbai Metro. Single phase traction load is connected between YB phases. Some snap shots of data collected during evening peak load on traction supply are given in Figs 2 to 7 and Table 4.

The peak load drawn during monitoring period is 12MW (Fig 5). The fault level of 33kV supply bus is about 833MVA. The expected unbalance in supply voltage is given by the following formula (as per IEC 61000-2-12, Cl 4.6):

$\Delta V = (12 / 833) \times 100 = 1.44\%$

The maximum unbalance recorded by meter is 1.8% and is in close agreement with the calculated value (Fig 3). Since reactive power (Fig 5) is fed into the system by traction load (leading power factor), voltage of Y & B phases are higher than R phase (Fig 2). Voltage THD recorded is less than 3% (Fig 6).

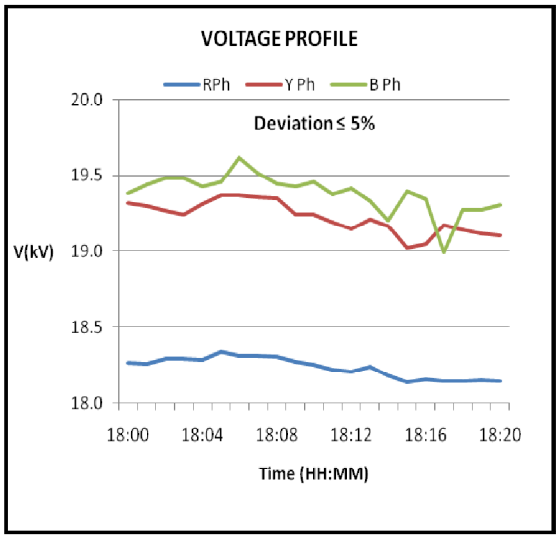

Fig 2

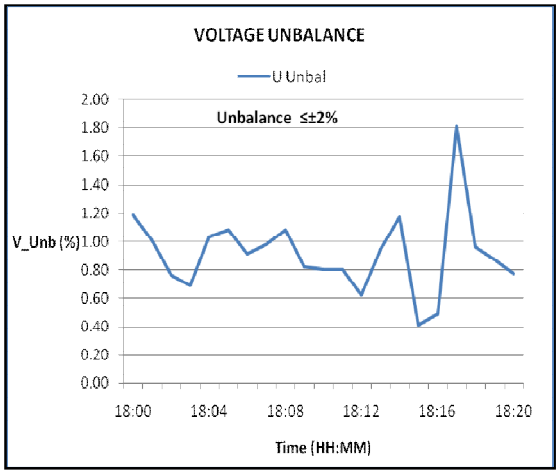

Fig 3

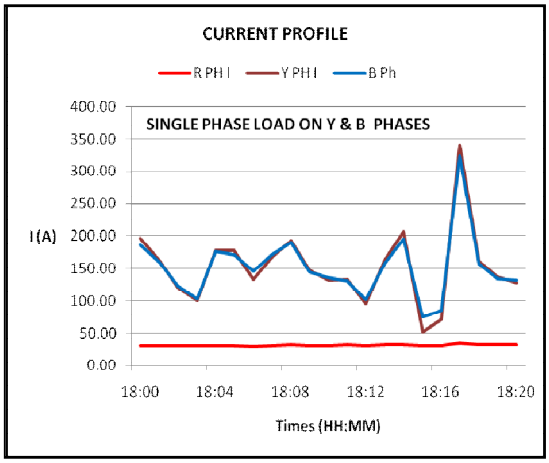

Fig 4

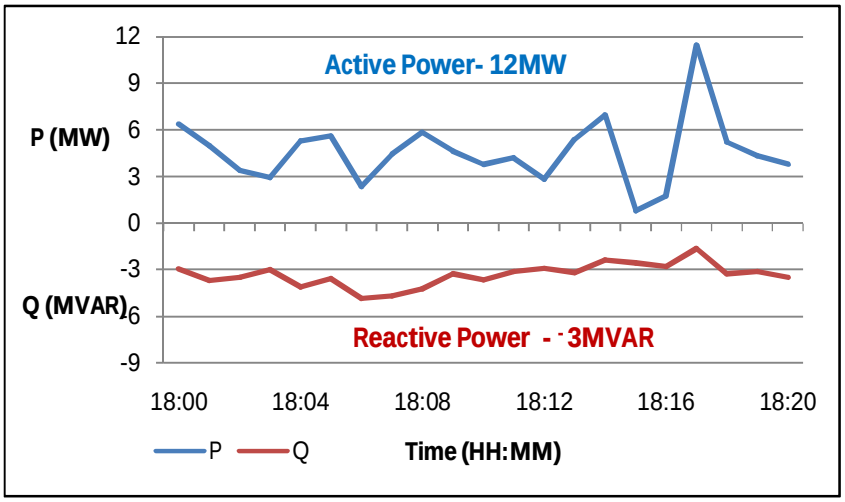

Fig 5

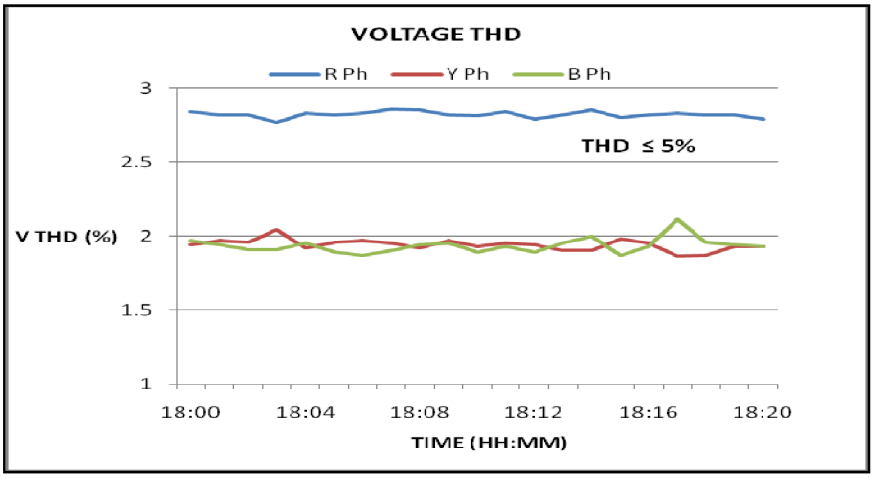

Fig 6

In case of voltage harmonics, measured THD is of direct use as the voltage is near rated value irrespective of load current.

However, measured THD of current harmonics is not directly interpretable as the current at the time of measurement may vary from small value (almost unloaded feeder) to a maximum (rated current of connected equipment). Hence IEEE Std 519 has introduced a term TDD (Total Demand Distortion) which is a normalized value based on rated current of equipment and fault level of source. If THD of no load current of transformer is measured, it could be even 100% but the fundamental current itself is very low (less than 1% of rated current).

The point is clarified with following example.

Rated Current of equipment I_{RAT} = 200A.

Allowable TDD as per standard, say = 20%

= 0.2 x 200 = 40A

On the day of spot measurement,

Current drawn by load, I_L = 50A

Measured THD = 50%. Even though THD appears alarmingly high, it is still with limits. Measured harmonic current = 0.5 x 50 = 25A which is less than allowable limit of 40A. In this case, even THD of 80% permissible.

TDD calculation for traction load is shown in Table 4 and time series plot is given in Fig 7. Measured TDD is well within allowable limits.

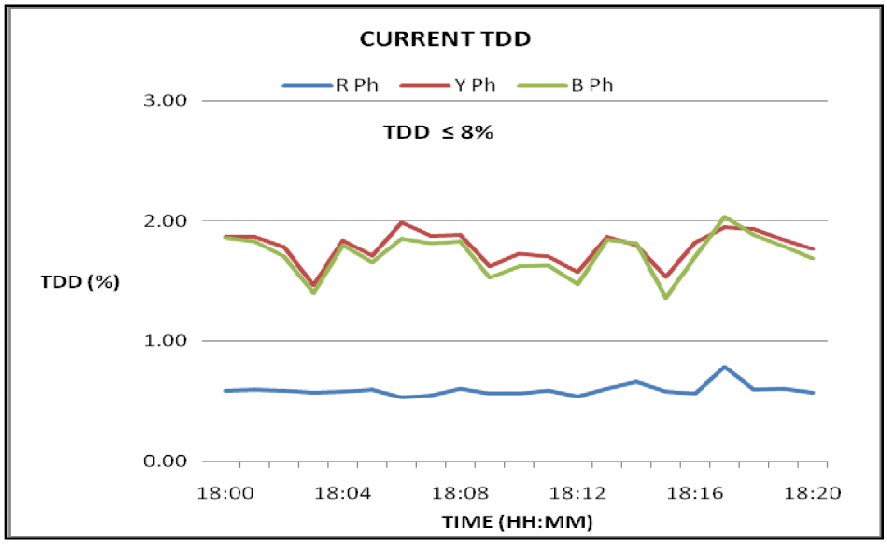

Fig 7

Rating of traction transformer = 20MVA

Rated voltage = 33kV

Maximum demand Load Current = I_L = 20/33 = 0.6kA

Short Circuit Level at 33kV = I_{SC} = 15kA

I_{SC} / I_L = 15 / 0.6 = 25

As per IEEE Std- 519, acceptable limit of TDD for 20 < I_{SC} / I_L < 50 = 8%

Time HR:MT	Measurands by PQ Meter						TDD (%)		
	Current THD (%)			Current (A)					
	R	Y	B	R	Y	B	R	Y	B
18:00	11.8	5.8	6.1	30.7	195.6	186.2	0.6	1.89 (*1)	1.86
18:01	11.8	7.0	6.9	30.9	162.8	159.9	0.6	1.87	1.83
.....	.....	.....	.....	.....	.....	.....	.....	.....	.....
18:20	10.9	8.3	7.7	31.9	128.8	132.3	0.57	1.76	1.68

(*1) → 5.8x195.6/600 = 1.89

Table 4

3.3 LED lights and harmonics

In the last few years LED lighting is introduced in mass scale as part of loss reduction and energy efficiency drive. This is actively supported by both central and state governments. But LED lights without proper inbuilt filters are great harmonic polluters and load power factor is also low. LEDs with large difference in Power Quality are available in market. For sample study, LEDs of different make and rating were selected for testing using a PQ meter. For illustrating the contrast, current waveforms are shown in Fig 8 & 9, one a series of spikes and the other near sinusoidal. The results of test (input power, THD and PF) are summarized in Table 5. There is a wide variation in power quality. It is desirable that statutory bodies assign star ratings to LEDs of different makes and types based on output lumen per Amp, THD and PF. The star ratings can be used for quantum of subsidy if contemplated.

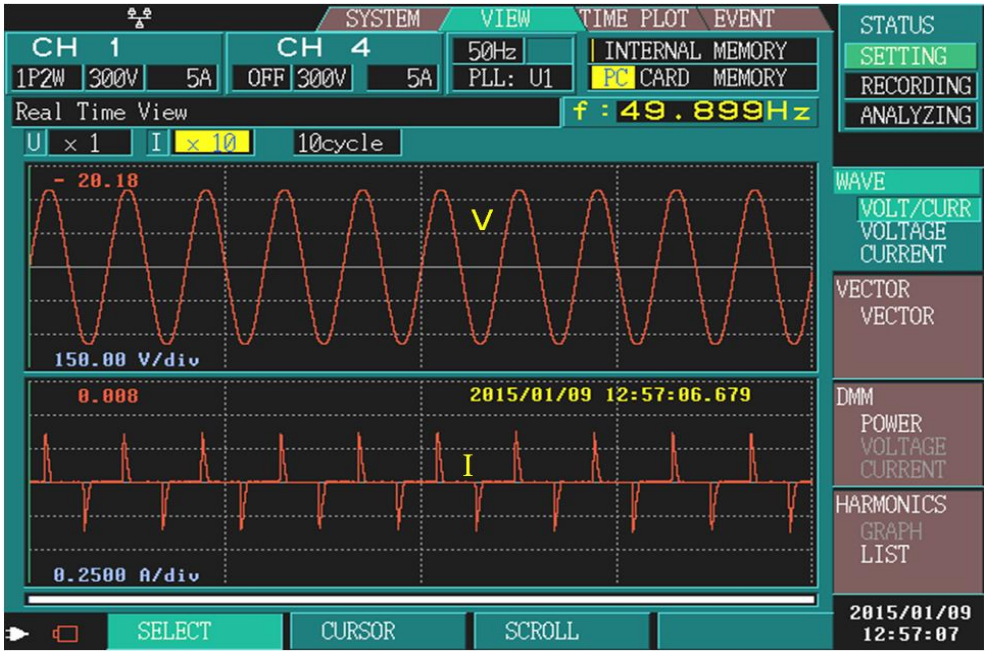

Fig 8

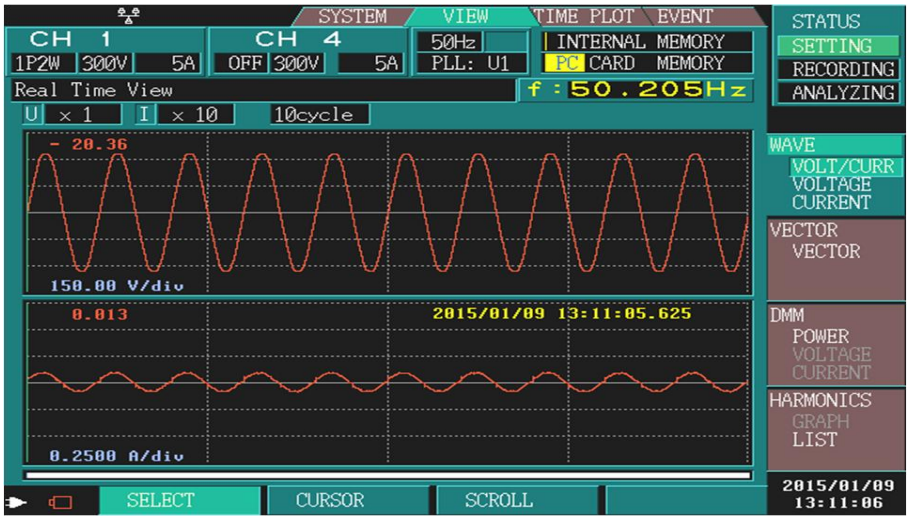

Fig 9

Make	Watt	THD Ct(%)	PF
1	3.7	183	0.45
2	9.4	154	0.50
3	10.7	166	0.50
4	29.7	35	0.94
5	22.4	35	0.93
6	14.8	6	0.96

Table 5

3.4 Power Quality Standard for Utility Supply

A very useful standard for practical applications is “BS - EN 50160:2000 Voltage characteristics of electricity supplied by public distribution systems”. The limits and tolerances of important phenomena that can occur from supply side are summarized in Table 6.

Supply voltage phenomenon	Acceptable limits	Measurement Interval	Monitoring Period	Acceptance Percentage
Grid Frequency	49.5Hz to 50.5Hz 47Hz to 52Hz	10 S	1 Week	95% 100%
Slow voltage changes	230V ± 10%	10 min	1 Week	95%
Voltage Sags or Dips (≤ 1 min)	10 to 1000 times per year (under 85% of nominal)	10 ms	1 Year	100%
Short Interruptions (≤ 3 min)	10 to 100 times per year (under 1% of nominal)	10 ms	1 Year	100%
Voltage unbalance	Mostly 2% but occasionally 3%	10 min	1 Week	95%
Harmonic Voltages	8% Total Harmonic Distortion (THD)	10 min	1 Week	95%

Table 6

Observations based on values given in Table 6 are given below:

(a) Regarding grid frequency, implementation of ABT and penal cost for non-compliance has dramatically improved the grid frequency profile in India. Sample frequency profile for Western Region is shown in Fig 10. The frequency is between 49.5 and 50.5 for almost 100% of time.

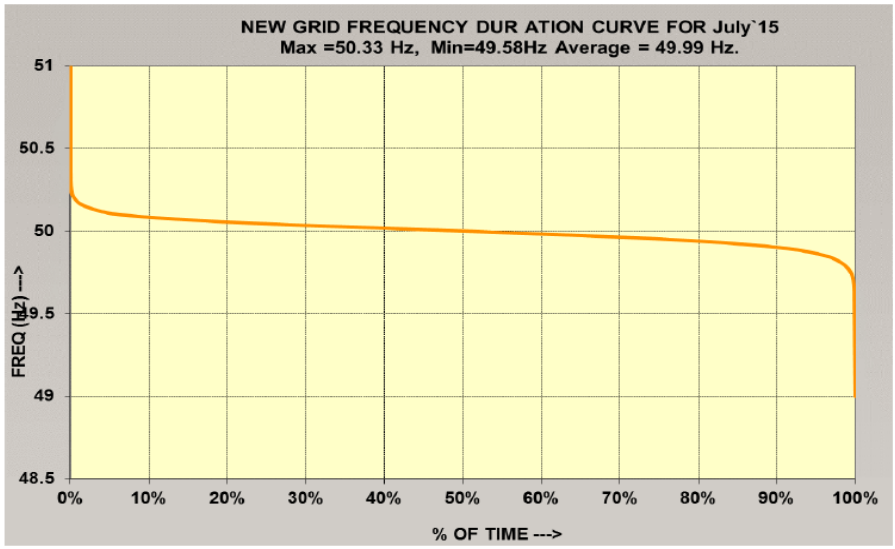

Fig 10

(b) The acceptable limits for voltage limits for slow changes as well as permissible number of dips are wide.

(c) Customer equipments shall be designed with adequate capability to ride over voltage dips.

(d) The measurement interval and monitoring period for voltage unbalance and harmonic measurement are substantial. For example, violation over the permissible limits for 5% of time (8.4 hours in a week) is permitted. This is based on the important fact that harmonics is not a transient phenomena but a steady state one and ultimately results in increased heating. Value judgment regarding harmonics should *not* be based on measurements taken over a few hours but based on performance over a longer period like a week.

4.0 CONCLUSIONS

The deleterious effects of poor power quality have necessitated study and investigation of power quality issues. The main tenet of this article is to bring out the actual facts by making measurements at site. Results of few case studies are presented. Critical remarks are made on the obligations by utility and consumer. If many utilities, railways, large industrial plants (like steel plants) and variety of consumers (like IT parks, Malls, etc) publish data on actual site measurements, these results could be the basis for future course of action either for curative solutions or for forming new regulations. Also availability of actual site measurements from a variety of sources can spur researchers to come out with solutions for 'real life problems'.

5.0 ACKNOWLEDGEMENTS

Bina Mitra was one of the core members when Power Quality cell was established in Reliance. She had done extensive work at various customer sites resolving PQ issues. Mohan Waingankar and his team contributed for voltage dip monitoring at EHV level. Vini Vazhappully's help in analyzing the data pertaining to Metro supply is acknowledged. Methil Menon furnished data on performance of LED lamps.

ieema journal

PARALLEL OPERATION OF TRANSFORMERS WITH LARGE NON-IDENTICAL TAPS FOR REACTIVE POWER COMPENSATION

Dr K Rajamani & Abhijit Mandal

Reliance Infrastructure Ltd., MUMBAI

(June 2016, IEEMA Journal, Page 94 to 98)

Parallel Operation of Transformers with Large Non-identical Taps for Reactive Power Compensation

K Rajamani Abhijit Mandal
Reliance Infrastructure Ltd

1.0 Introduction

A PV solar plant of 40MW capacity is established in Dhursar, Rajasthan, India. The DC output from individual solar panels is converted to AC through inverters. Inverter outputs are summed up and the consolidated output is stepped to 33kV with 380V / 33kV transformers. The transformers feed 33kV bus of switchyard through over head lines. In the switchyard, 33kV voltage is further stepped up using two numbers 220/33 kV Step UP Transformers (SUTs). A 32KM overhead line, owned by Power Plant Operator, connects Dhursar 220kV substation to Deechu substation of State utility (Grid). The power evacuation scheme is shown in Fig 1. Circuit breaker positions are omitted to simplify the network details. Details of CSP (Concentrated Solar Plant), installed at the same location, are omitted as this is not directly relevant to present analysis and discussions.

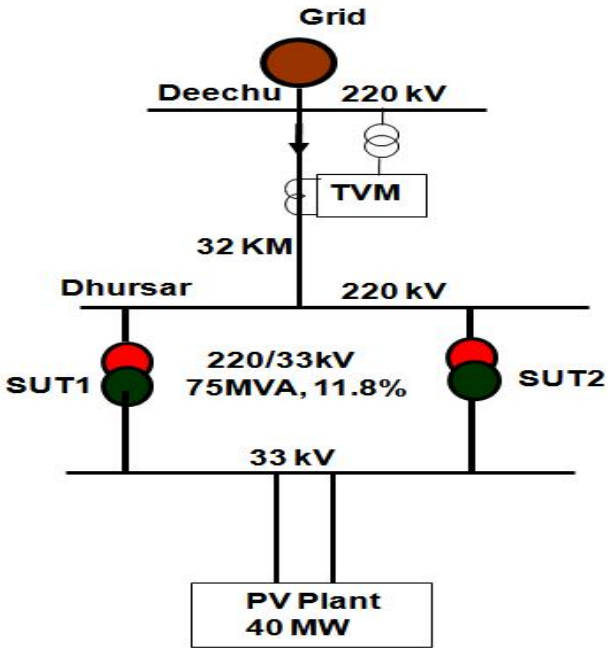

Fig 1

June 2016, IEEMA Journal, Page No. 94 to 98

During night time, when the PV plant is down, small auxiliary power to the extent of 500KW is drawn over the Deechu – Dhursar EHV line. In the vicinity of plant, MV or LV lines are not present that could have supplied the auxiliary power. Tariff meter at Deechu substation is used for billing purpose towards import of power from grid to plant. The lightly loaded EHV line generates not so insignificant capacitive charging MVAR. In the present case, assuming 0.14MVAR/KM for line charging, the 32KM long line will generate about 4.5MVAR. Depending on the actual voltage at which EHV line operates, charging VAR will vary (proportional to V^2). Though the active power drawn on the line is (maximum) 0.5MW, because of charging VAR of line, the tariff meter at grid station registers maximum demand of about 5MVA. Assuming demand charges of Rs 160/KVA/month, fixed charges work out Rs 8 lacs per month.

It is desirable to reduce the contract demand to a minimum so that high fixed charges are not paid for drawing *just* 500KW during night time. One straight forward and well known solution is to install a shunt reactor of 4 to 5 MVAR at 33kV to nullify the capacitive charging current from line. The reactor can be switched in during night time and switched off during day time. This will directly reduce the demand within 1 MVA.

Another (unconventional) alternative is to operate the two 220/33kV transformers in parallel and *deliberately keep the taps of transformers very different* (say one at+5% and the other at -5%). This results in circulating current between the two transformers. The circulating current produces reactive loss and thus acts like a shunt reactor. The reactive loss in transformer compensates the capacitive generation from line. This results in reduced demand from grid station.
This article presents the results obtained from tests done at site operating the transformer in parallel with non-identical taps.

2.0 Analysis prior to site testing

Before attempting this novel exercise at site, extensive analytical and simulation studies were done for parallel operation with different taps to estimate the differential voltage to be kept to reduce the demand at grid substation to less than 1 MVA.

Parameters of Step Up Transformer (SUT) are given below:

Rating: 50 / 60 / 75 MVA (ONAN / ONAF / OFAF)

Voltage: 220 / 33 kV

Tap Range: ±10% in steps of 1.25%

Tap 1 → 242 / 33 kV

Tap 9(N) → 220 / 33 kV

Tap 17 → 198 / 33 kV

Rated Impedance on 75 MVA: 11. 6% on Tap 9 (Nominal)

: 12.08% on Tap 1

: 11.70% on Tap 17

For simulation purposes, transformer impedance is considered as 11.8%.

Base current I_B = 75 / (1.732 x 33) = 1.312 kA

2.1 Permissible tap range to avoid overfluxing

During the testing, transformers should not be subjected to over fluxing condition [1]. The design flux density is 1.7T at all taps. Testing was planned after 7PM when the PV plant shuts down. Based on recent records of 220kV grid voltage profile after 7PM, the maximum grid voltage expected during testing was 230kV. For applied voltage of 230kV, the operating flux density at different taps is shown in Table 1.

Tap No	1	5	9	10	11	12	14	17
HV Vol kV	242	231	220	217.25	214.5	211.75	206.25	198
HV Vol %	+10	+5	*N*	-1.25	-2.5	-3.75	-6.25	-10
B_{OPE} T	1.62	1.69	1.78	1.80	1.82	1.85	1.90	1.97
LV Vol kV	33							

Table 1

For example:

Operating flux density at Tap 1 = (230/242) x 1.7 = 1.62T

Operating flux density at Tap 9(N) = (230/220) x 1.7 = 1.78T

Operating flux density at Tap 17 = (230/198) x 1.7 = 1.97T

The above gives a clue that initially keep the tap of one transformer at 9 and progressively change the tap of other transformer towards 1 (positive maximum). In this way, there is no danger of over fluxing. If the demand from Deechu to Dhursar does not fall below 1MVA, even after keeping the tap at 1 on one transformer, change the tap of other transformer towards 17 (negative maximum). But in this case we must ensure that operating flux density does not exceed saturation flux density of 1.9T. As a measure of abundant caution, it was decided to restrict operating flux density to below 1.85T. This corresponds to a tap 12. Hence the tap range available is 1(+10%) for one transformer and 12(-3.75%) for other transformer. Studies were done varying the taps within this permissible range.

2.2 Approximate differential voltage estimation

Assume reactive compensation requirement = ΔQ = 5MVAR

ΔQ = 5 / 75 = 0.0667pu

X_T = 11.8% = 0.118pu

Let differential voltage when taps of the two transformers are non-identical = ΔV

Refer Fig 2. When switch S is closed, circulating current flows. Refer Cl 6.2 [2].

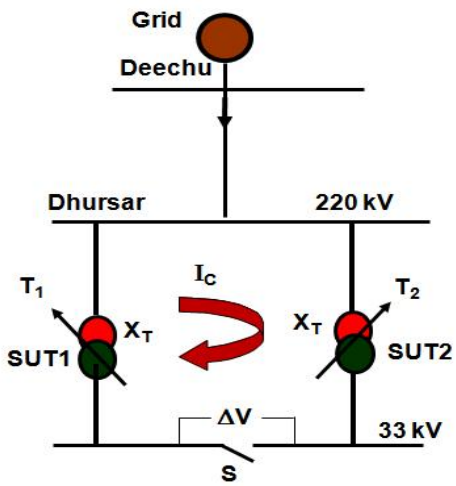

Fig 2

Circulating current $I_C = \Delta V / 2X_T$

Calculated Reactive Loss = $I_C^2 \times 2X_T = \Delta V^2 / 2X_T = \Delta Q$

$\Delta V = \text{Sqrt}(\Delta Q \times 2X_T)$ = 0.1255pu

The approximate voltage difference required is 12.55%. This will create circulating current that will produce reactive loss of 5 MVAR.

This is verified by detailed load flow simulation described in next section.

2.3 Load flow studies

Refer Fig 3 for base case when both transformers are at nominal tap. The circulating current is zero. The demand from grid is 5.041 MVA.

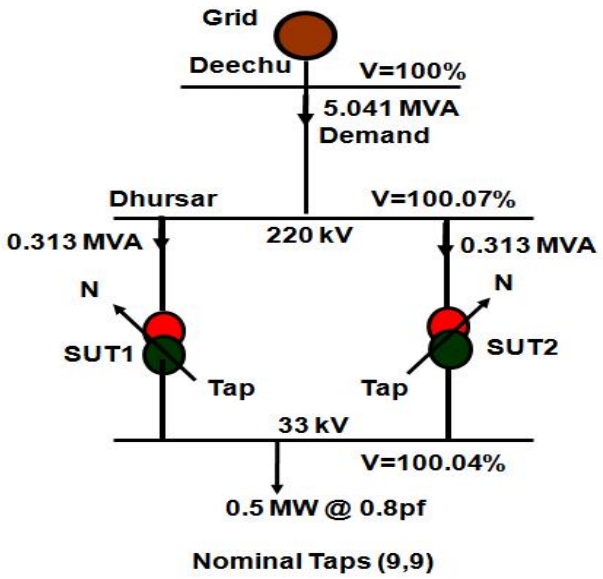

Fig 3

Next, tap of SUT1 is kept at 8 (+1.25%) while that of SUT2 is unchanged at 9. Refer Table 2 and Fig 4. The circulating current between the transformers is 69A which produces reactive loss. The demand from grid reduces to 4.993MVA.

Tap No (%)		Differential Voltage (%)	I_{CIR} Amps		Reactive Compensation MVAR		Demand from Grid MVA	
SUT1	SUT2		Calculated	Measured	Calculated	Measured	Calculated	Measured
9 (0)	9 (0)	0	0	0	0	0	5.041	4.855
8 (+1.25)	9 (0)	1.25	69.0	69.92	0.048	0.040	4.993	4.815
7 (+2.50)	9 (0)	2.50	135.5	140.17	0.189	0.125	4.853	4.730
6 (+3.75)	9 (0)	3.75	201.0	205.07	0.415	0.265	4.628	4.590
5 (+5.00)	9 (0)	5.00	265.0	269.60	0.721	0.570	4.324	4.285
4 (+6.25)	9 (0)	6.25	327.5	332.37	1.101	0.945	3.947	3.910
3 (+7.50)	9 (0)	7.50	388.0	392.33	1.548	1.353	3.504	3.505
2 (+8.75)	9 (0)	8.75	447.5	453.52	2.059	1.833	2.999	3.025
1 (+10.0)	9 (0)	10.00	505.5	509.83	2.628	2.376	2.440	2.485
1 (+10.0)	10 (-1.25)	11.25	575.5	581.70	3.410	3.266	1.682	1.605
1 (+10.0)	11 (-2.50)	12.50	647.5	647.10	4.318	4.152	0.859	0.715

Table – 2

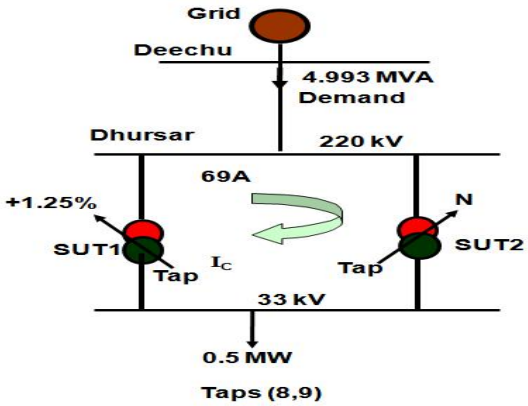

Fig 4

In Fig 5, tap of SUT1 is at 1 (+10%) while that of SUT2 is at 9. The circulating current is 505.5A. The demand from grid reduces to 2.44MVA.

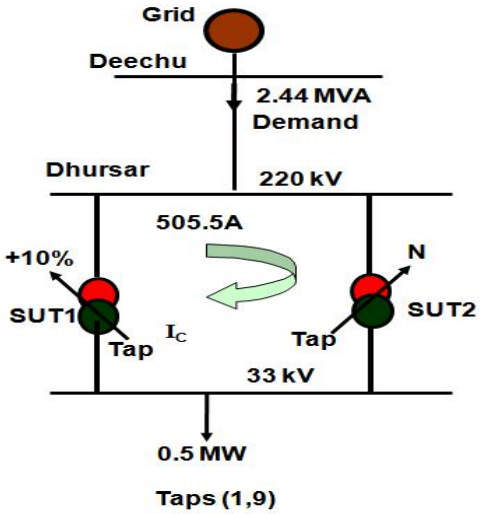

Fig 5

In Fig 6, tap of SUT1 is at 1 (+10%) while that of SUT2 is at 11(-2.5%). The circulating current is 647.5A. The demand from grid reduces to 0.859MVA. Thus with a differential voltage of 12.5%, the demand from grid reduces below 1MVA which is the desired objective.

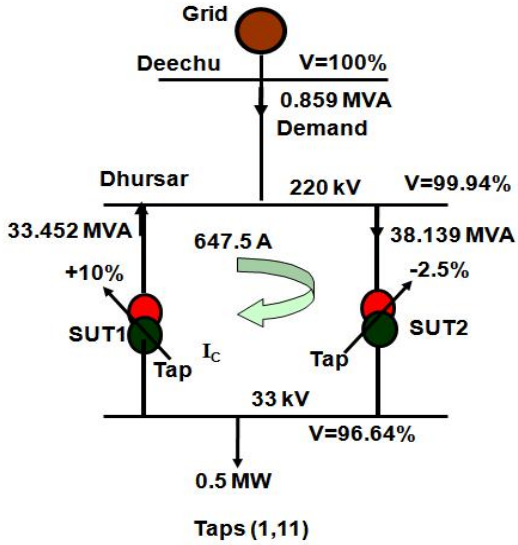

Fig 6

3.0 Testing at site

The above theoretical analysis gave us confidence to go ahead with testing at site. Before starting the test, all the existing switchyard protections and schemes were checked and corrective actions where ever required were ensured to prevent inadvertent tripping during testing. A template was made to note down the following for each set of taps:

- Tap numbers of SUT1 and SUT2
- Grid Voltage
- MVA and pf from grid as registered in tariff meter at Deechu
- Currents on 33kV side of transformers
- OTI and WTI readings
- Operating current and restraining current as registered by differential protection for each transformer.

Automatic control of OLTC was disabled. Tap changing was done locally. Since this type of testing is one of a kind and rarely attempted before, engineers were stationed locally near the transformers to notice any abnormal increase in vibration or noise during testing.

3.1 Measurement of circulating current

On 33kV side, phase currents (magnitude) for both transformers are measured. The circulating current is derived as follows:

Three phase currents from SUT1: I_R^1, I_Y^1, I_B^1

Three phase currents from SUT2: I_R^2, I_Y^2, I_B^2

Measured Circulating current $I_C = (I_R^1 + I_Y^1 + I_B^1 + I_R^2 + I_Y^2 + I_B^2) / 6$

3.2 Measurement of reactive compensation achieved

Reactive power on tariff meter at Deechu end is measured.

(i) With both transformers on nominal tap (Tap 9), Measured reactive power = Q_0

(ii) With non-identical taps, measured reactive power = Q_K

Measured reactive compensation achieved = $Q_0 - Q_K$

3.3 Measurement of MVA

The MVA demand is a direct measurement read from tariff meter at Deechu end.

3.4 Comparison between measured and calculated values

Refer Table 2.

(i) Testing started with taps of SUT1 and SUT2 kept at nominal values (Tap 9). The measured values are:

Circulating current $\cong 0$

Demand = 4.855MVA

Power factor = 0.043

MVAR = 4.8505

(ii) Tap of SUT1 is changed to 8(+1.25%) while tap of SUT2 tap is unchanged.at 9. The measured values are:

Circulating current = 69.92A

Demand = 4.815MVA

Power factor = 0.044

MVAR = 4.8103

Reactive compensation realized = 4.8505 – 4.8103 = 0.0402MVAR

(iii) Tap of SUT1 is changed to 7(+2.5%) while tap of SUT2 is unchanged.at 9. The measured values are:

Circulating current = 140.17A

Demand = 4.73MVA

Power factor = 0.043

MVAR = 4.7256

Reactive compensation realized = 4.8505 – 4.7256 = 0.1249MVAR

(iv) Similar measurements were taken till SUT1 tap is at 1(+10%) with tap of SUT2 is unchanged at 9. The demand has come down to 2.485MVA (Refer Table 2). Next, the tap of SUT2 was raised to 10 and then to 11 (-2.5%) with tap of SUT1 at 1. The measured values are:

Circulating current = 647.1A (49% of I_{RAT})

Demand = 0.715MVA

Power factor = 0.214

MVAR = 0.6984

Reactive compensation realized = 4.8505 – 0.6984 = 4.1521MVAR

(v) Measured reactive compensation for differential voltage of 1.25% is 0.0402 MVAR {Refer Cl(ii) above}. When differential voltage is increased ten times (12.5%), {Refer Cl(iv) above} the measured reactive compensation increases by almost 100 times to 4.1521 MVAR. This exponential increase in reactive compensation (proportional to I_C^2) with increase in differential voltage can be seen from Fig 7.

(vi) Further increase in tap of SUT2 to Tap 12 will make the drawl from grid reactive but the demand will be almost the same with tap of SUT2 at Tap 11. Hence the testing was terminated with taps of SUT1 and SUT2 at Tap 1 and Tap 11 respectively.

(vii) With tap of SUT1 at 1 and tap of SUT2 at 11, the goal to get the demand at Deechu below 1MVA is achieved. This corresponds to a differential voltage of 12.5% and is in line with analytical predictions.

(viii) Comparisons between calculated values (from load flow studies) and values obtained from test at site are shown in Fig 7, Fig 8 and Fig 9. The calculated and test values are in close agreement.

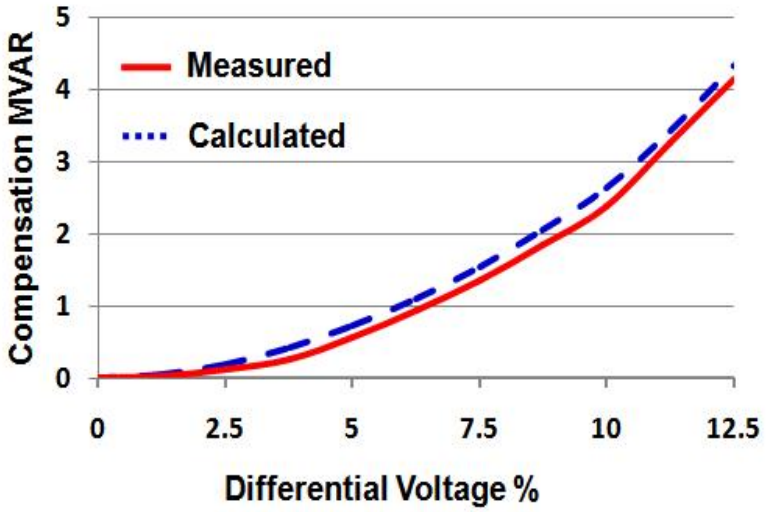

Fig 7

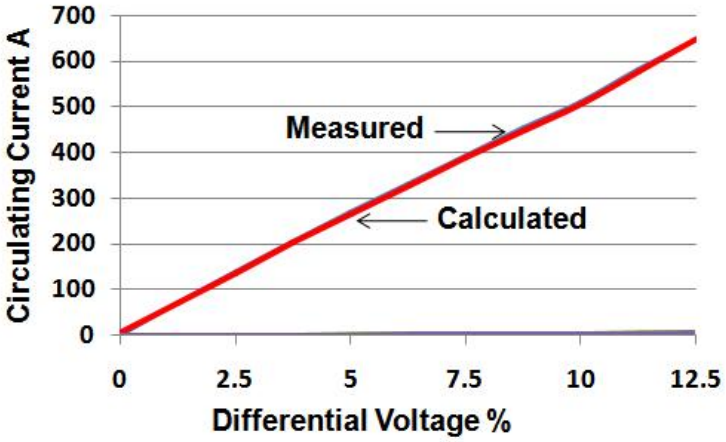

Fig 8

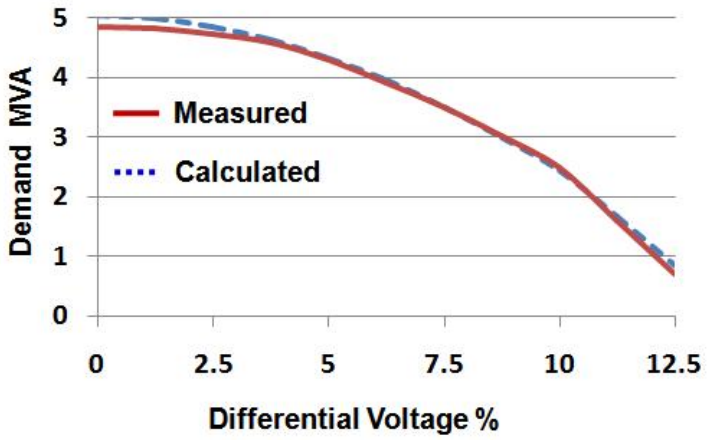

Fig 9

Minor errors could be attributed to following:

- Calculated values assume constant voltage on EHV side. During measurement at site, grid voltage is not steady and varies when readings are taken at different instances of time. Grid voltage varied between 225.6kV and 227.4 kV during the testing period.
- Calculated values assume constant impedance at all taps. In practice, there is a small variation in impedance at different taps.
- Since the quantity measured is low (less than 5 MVA at 220kV), inherent meter error can't be avoided.

(vii) During the entire testing duration transformers were operated under ONAN conditions. WTI and OTI readings of both the transformers were monitored. The maximum recorded values were 45°C and 42°C for WTI and OTI. These are much below the alarm and trip settings which are in the range of 90°C to 100°C.

4.0 Acknowledgement

The authors acknowledge valuable inputs received from Sanjiv Srivastava on over fluxing aspects.

The authors thank Sonu Karekar for conducting the load flow studies.

The authors acknowledge the contribution of the site team (K Sheshadri, Anil Jain, Alpesh Prajapati, Amit Jain, Deepak Paswan and Shivdan) at Dhursar for helping to conduct this unique test successfully and safely.

The authors are grateful to Tanvi Shrivastava. The technical support extended by her greatly facilitated in getting the experiment through at site.

5.0 Conclusion

The conventional wisdom during parallel operation of transformers is to keep the taps of both transformers identical. Specific master – follower control schemes have been developed for OLTC operation to achieve this 'golden rule'. The main reason is to avoid circulating current between transformers which only adds to heating of transformer. In the present case, the 'golden rule' has been deliberately broken. The taps of both transformers are kept widely different to circulate substantial current between the transformers. The circulating current produces reactive power loss and the effect of shunt reactor is achieved without a physical reactor being present. The reactive loss in transformer compensates capacitive VARs produced in EHV system. This has been successfully demonstrated at site at 220kV level. *In India, this may be one of the few instances where parallel operation with such large deviation in taps at EHV level has been attempted.* The same idea could be extended by system control operators for mitigating over voltage problems even at grid levels. Another interesting application could be for testing Differential / REF schemes passing substantially large primary currents.

6.0 References

[1] 'Transformer engineering – Design and practice', S V Kulkarni and S A Khaparde, Marcel Dekker, 2004.

[2] 'Power transformers - Application guide', IEC 60076-8, 1997

ieema journal

CONCEPTUAL CLARIFICATIONS IN ELECTRICAL POWER ENGINEERING

Part-1

Dr K Rajamani,

Reliance Infrastructure Ltd., MUMBAI

(August 2016, IEEMA Journal, Page 69 to 80)

Conceptual Clarifications in Electrical Power Engineering – Part 1

K Rajamani, Reliance infrastructure Ltd

1.0 Introduction

"Life is really simple, but we insist on making it complicated." - Confucius

Field engineers encounter many problems during testing, commissioning, operation and maintenance. Most of the problems are solved either by trial and error or seeking advice from 'experienced' persons who might have encountered similar problems in the past. But a sounder approach will be to understand the basic concepts of 'whys of things' that will eliminate substantial uncertainty in resolving issues. In short, to recognize the elephant in the room is the first step. In this series of articles, basic conceptual confusions that confront power engineers in field are stated with their resolution. Minimum theoretical concepts required to explain field problems are included.

2.0 Concept of Reactive Power and Reactive power loss

The concept of reactive power is brilliantly explained in Ref [1,2]. Any electric circuit is always a combination of resistance, inductance and capacitance. Refer Figure 1 and Table 1.

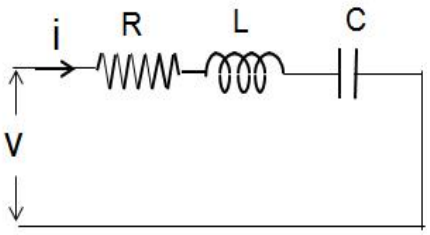

Fig 1

$v = V_m \cos \omega t$; $i = I_m \cos(\omega t-\theta)$; $pf = \cos \theta$	
Instantaneous Power = $V_m I_m \cos \omega t \cos(\omega t-\theta)$	
$= (1/2) V_m I_m \cos \theta (1+\cos 2\omega t) + (1/2) V_m I_m \sin \theta \sin 2\omega t$	
Instantaneous Active Power $(1/2) V_m I_m \cos \theta (1+\cos 2\omega t)$	Instantaneous Reactive Power $(1/2) V_m I_m \sin \theta \sin 2\omega t$
Average Active Power $P = V I \cos \theta$ Called simply Active Power	Average Rective Power 0 Usually Ignored
Amplitude Instantaneous Active Power $P = V I \cos \theta$ Usually ignored as it is simply P	Amplitude Instantaneous Reactive Power $Q = V I \sin \theta$ Called simply as Reactive Power

Table 1

August 2016, IEEMA Journal, Page No. 69 to 80

The instantaneous power waveform is illustrated with a numerical example in Fig 2.

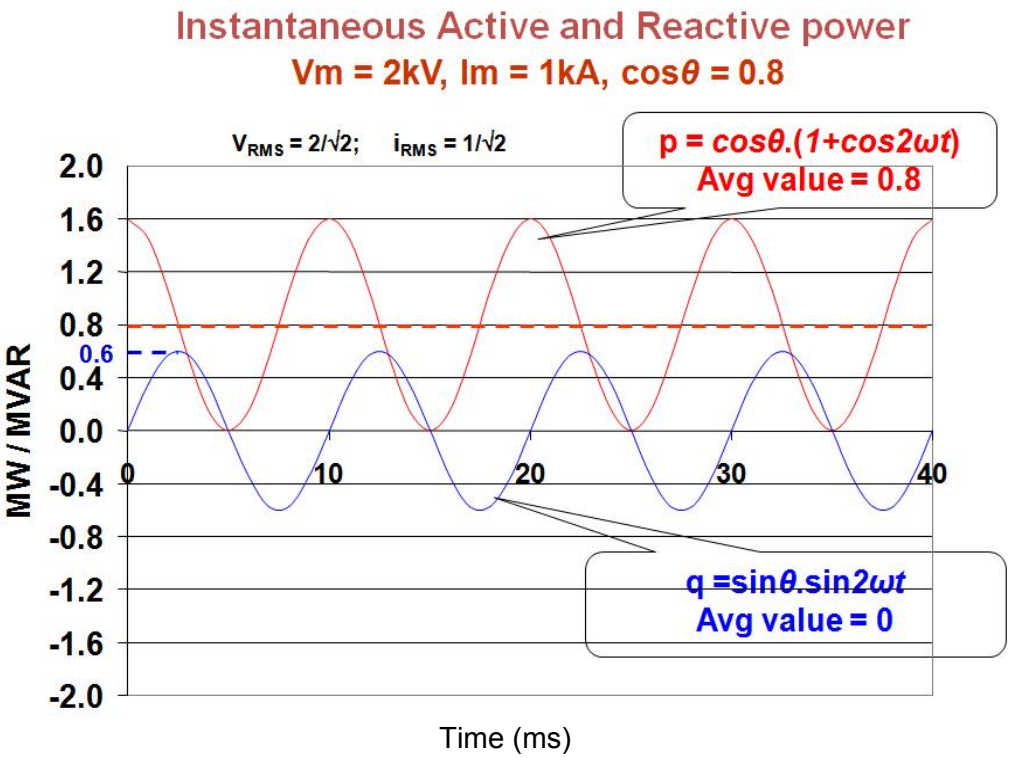

Fig 2

There are two components in instantaneous power. One is called the "Active power". Averaging of instantaneous active power is called Active Power =V I cosθ. This is always positive (0,8 in Fig 2) and instantaneous real power oscillates around this value. It does the useful work.

Another component is called the "Reactive power". Reactive power = V I sinθ is the *maximum* value of instantaneous reactive power (0.6 in Fig 2). Thus, though V and I are RMS values, VIsinθ is *not* average value but instantaneous value at its maximum (minimum) peak. Average of instantaneous reactive power is zero as it oscillates around X axis. It is the energy stored in the circuit inductance and capacitance. Physically it implies what the system delivers in one quarter cycle, inductance / capacitance delivers back to system in next quarter cycle.

If this is the case, what is meant by reactive power loss? Refer Figure 3. Instantaneous reactive power waveforms at sending end and receiving end are shown. The decrease in *amplitude* while delivering reactive power is termed as reactive power loss.

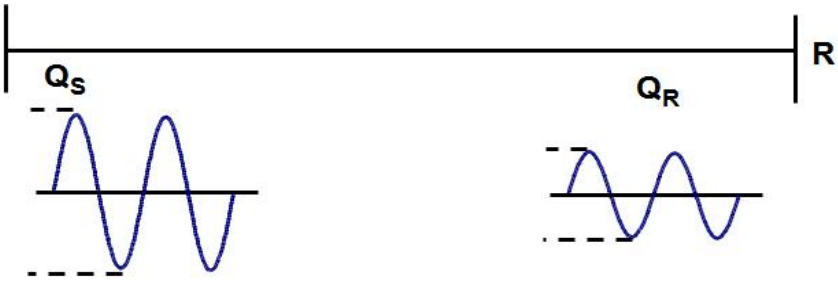

Fig 3

The under lying concept is further illustrated with an example. Consider a single phase network with only reactive elements as shown in Fig 4. Let V_S = 230V; X_1 = 1.26Ω; X_2 = 3.77Ω.

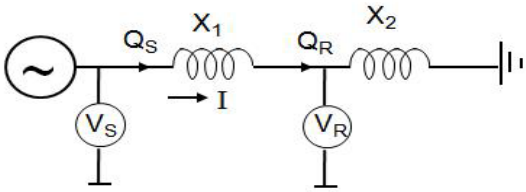

Fig 4

The results of simulation are given in Fig 5. There is a drop in amplitude of receiving end reactive power (Q_R) compared to sending end reactive power (Q_S). But the average values of Q_S and Q_R are still zero as they oscillate around X axis.

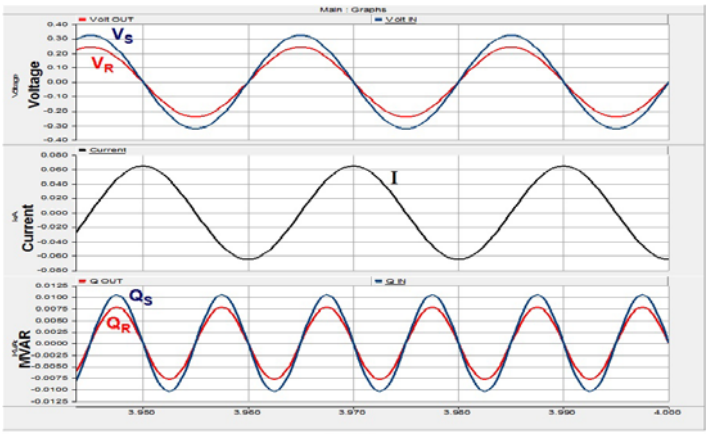

Fig 5

From simulation, Q_S = 10.52KVAR and Q_R = 7.89KVAR. The reactive power loss = 10.52-7.89 = 2.63KVAR.

Reactive power loss is also given by I^2X_1.

I = 230 / (1.26+3.77) = 45.73A.rms

Q_{LOSS} = 45.73^2 x 1.26 /1000 = 2.63KVAR

This is same as obtained from simulation.

The interesting point to note is that I is RMS while Q is *amplitude* of instantaneous quantity. This peculiarity is due to way Reactive Power is defined.

The sending end voltage (V_S) and receiving end voltage (V_R) are shown in Fig 5. The reduction in voltage at receiving end is due to voltage drop in reactor.

Sonu Karekar's help in PDCAD simulation is acknowledged.

3.0 Regulation and transformer impedance

Regulation refers to change in terminal voltage when a network element like transformer carries load. *At the outset, it should be emphasized that %Regulation is not %Impedance*. 10% impedance *does not imply* that 10% change in voltage under full load conditions. This is true only when full load is drawn at ZPF. As an illustration, consider 20MVA transformer with 13% impedance. Refer Fig 6.

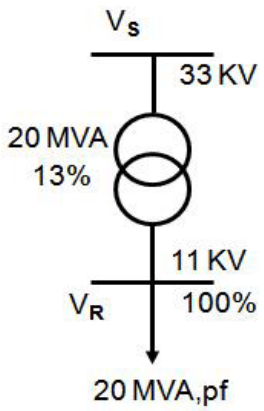

Fig 6

Variation of sending end voltage for a specified (100%) receiving end voltage at rated MVA for different pf is shown in Fig 7. If load is drawn at 0.9 pf or better, even at full load, the regulation is less than 5%. Below 0.8 pf, regulation increases rapidly and reaches 13% (impedance value) at ZPF. It is important to note that magnitude of current drawn (I) is same and hence reactive loss (I^2X) in transformer is same in all cases.

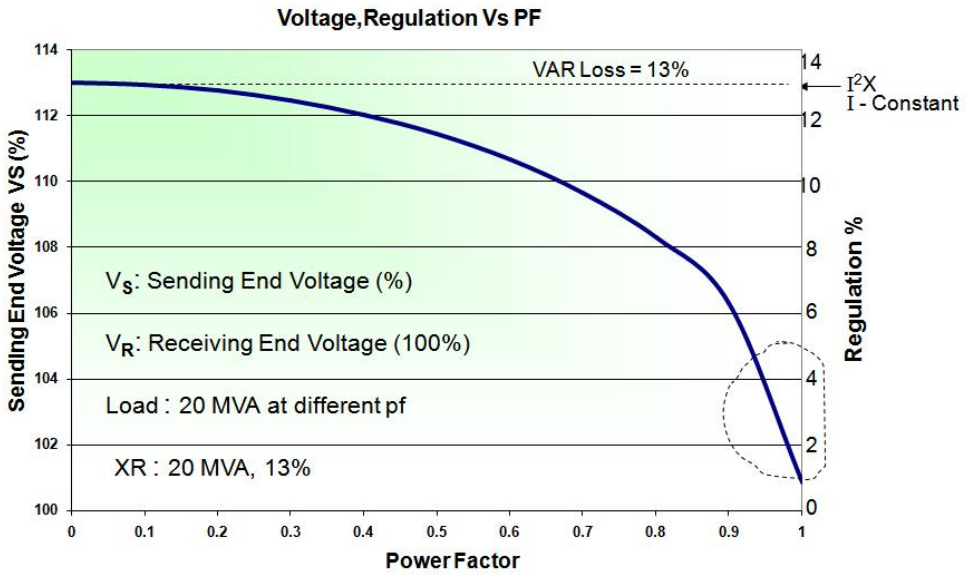

Fig 7

The vector diagram for two extreme cases, UPF and ZPF, are shown in Fig 8. If current is at UPF, the voltage drop (IX) is in quadrature with V_R and resultant V_S is close to V_R (regulation – 0.84%). If current is at ZPF, voltage drop adds algebraically with V_R resulting in large V_S (regulation – 13%).

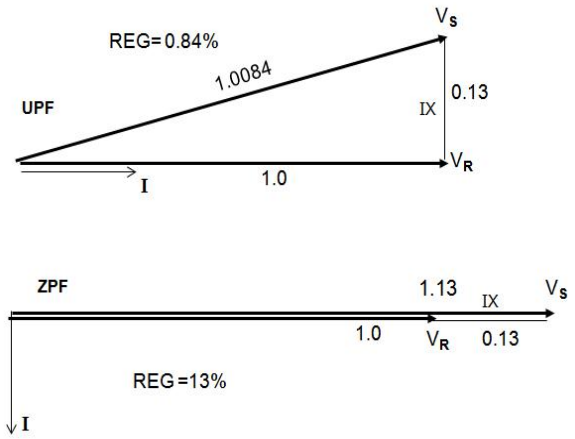

Fig 8

Consider another example shown in Fig 9. Transformer parameters are as below: 400 / 11.5 / 11.5 kV; 90 / 45 / 45 MVA

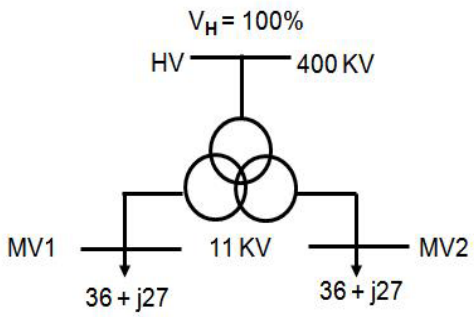

Fig 9

Impedance on 90 MVA base:

HV- MV1: 21.76%

HV-MV2: 21.61%

MV1-MV2: 41.12%

Load at each MV bus = 45 MVA at 0.8 pf = 36 + j 27

The resulting voltages for above loading are given below:

V_H = 100%; V_{MV1} = V_{MV2} = 96.2%

On no load, V_H = 100%; V_{MV1} = V_{MV2} = 104.6%

Regulation = [(104.6-96.2) / 104.6] x 100 = 8%

Even though HV to MV impedances are about 22%, the regulation is only 8% since the load power factor is not low (0.8).

In case of large EHV power transformers (600 MVA and above), impedances in the range of 15% to 25% are common. These large values are chosen to limit the fault level within available breaker capacity. But large impedance values per se do not cause voltage regulation problems as long as load is at good power factor. At EHV level, the load flow power factor is generally above 0.95.

The raison d'etre of reactive compensation in distribution and transmission networks follows from the above discussions. Major network elements like transformer, overhead line, cable, etc are almost reactive (X/R >>1). By reactive compensation at different voltage levels, power factor of current flowing through network elements is made near to unity which leads to low regulation and near normal voltage profile. For deeper insight into reactive compensation details refer [3].

4.0 Effectively grounded system

Power supply to Mumbai is derived through multiple voltage transformations. The bulk power is stepped down at Transmission Stations. A typical Transmission Station (T/S) has a number of 220/33 kV, Star – Zig Zag transformers. The Star neutral is solidly grounded whilst Zig Zag neutral is grounded through NGR (Neutral Grounding Reactor). Each transformer feeds 5 to 6 Receiving Stations (Refer Fig 10).

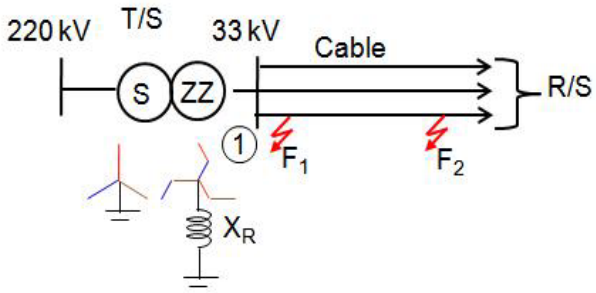

Fig 10

At the Receiving Station (R/S), step down transformer has the following rating: 33/11 kV, 20MVA, Delta – Zig Zag. Secondary neutral is solidly grounded. Each transformer feeds 5 to 6 Ring Mains. Each Ring Main serves 5 to 10 Sub-Stations. (Refer Fig 11). At each Sub-station, 11/0.44 kV Distribution Transformers (DT) step down power and feed LT distribution system.

At Transmission Stations, secondary of transformer is 'effectively grounded'. At Receiving Stations, secondary of transformer is 'solidly grounded'. The meaning of 'solidly grounded' is that there is no intentional intervening impedance present between the transformer neutral and ground. It may be noted that 'solidly grounded' system is a subset of 'effectively grounded system'. A 'solidly grounded' system is 'effectively grounded' but an 'effectively grounded' system need not be 'solidly grounded'.

The two relationships generally used for characterizing effectively grounded system are given below. Refer Cl 5.0 [4].

a) $K_F \geq 0.6$.

K_F = (Single Phase to ground fault current) ⁄ (3 Phase Fault current)

$= I_{1P} / I_{3P}$

This is frequently used by field engineers as it is easy to understand and implement.

For solidly grounded system, $K_F \geq 1.0$.

For ungrounded system, $K_F \cong 0$

b) EFF (Earth Fault Factor) ≤ 1.4

EFF = Maximum Line to ground voltage on healthy phase during fault ⁄ Rated Line to ground voltage

For solidly grounded system, EFF ≤ 1.0.

For ungrounded system, EFF $\cong 1.732$

Case 1

Refer Fig 10 (T/S). Rating of transformer is 125 MVA, 220/33 kV, Star – Zig Zag, $Z_P = Z_N = 15\%$; $Z_0 = 2.5\%$.

Three phase fault current at 33 kV Bus1 = I_{3P} = (125/0.15) / (√3X33) = 14.6 kA

Rated phase voltage = 33 / √3 = 19.05 kV

The secondary neutral is earthed through NGR to limit the ground fault current to a desired value. Assume $X_R = 1\Omega$.

Ground fault is simulated on Phase R very near to Bus1 (F_1 in Fig 10). From results of simulation,

$I_{1P} = I_R$ = 10.18 kA

K_F = 10.18 / 14.6 = 0.7

Since K_F > 0.6, the system for this fault is effectively grounded.

This can be reconfirmed from voltage rise on healthy phases during fault.

V_R = 0

$V_Y = V_B$ = 22 kV (116%)

EFF = 1.16 < 1.4

Case 2

The same example is repeated with ground fault (R Phase) on cable at 3.6 KM away from Bus1 (F_2 in Fig 10). The cable parameters used for simulation are [5]:

Cable size: 3C x 400mm^2 Al

$Z_P = Z_N = 0.08 + j\,0.117\ \Omega/KM$

$Z_O = 0.646 + j\,0.644\ \Omega/KM$

From results of simulation:

$I_{1P} = I_R = 5.88$ kA

The voltages at Bus1 for far end fault are given below:

V_R = 9.39 kV (49%)

V_Y = 22.13 kV (116%)

V_B = 19.91 kV (105%)

EFF = 1.16 < 1.4

This brings out an important fact that even though ground fault current is only 40% of three phase fault current at Bus1 (5.88 / 14.6 = 0.4), the voltage rise at the Bus1 is still within limits (<1.4 pu). *Hence all other feeders connected to Bus1 do not experience over voltage.*

Case 3

Refer Fig 11 (R/S). Transformer rating is 20 MVA, 33/11 kV, Delta – Zig Zag,

$Z_P = Z_N = 12.5\%$; $Z_0 = 3\%$.

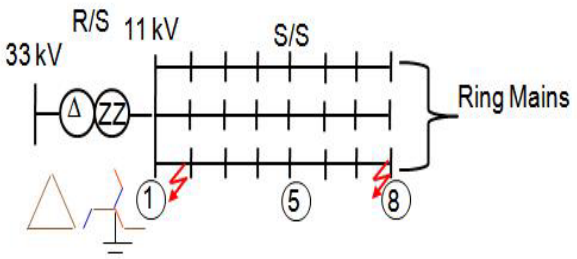

Fig 11

Three phase fault current at Bus1 = I_{3P} = (20/0.125) / (√3X11) = 8.4 kA

Rated phase voltage = 11 / √3 = 6.35 kV

Secondary neutral is solidly grounded.

Case 3.1

Ground fault is simulated on Phase R very near to Bus1. From results of simulation,

$I_{1P} = I_R$ = 11.25 kA

K_F = 11.25 / 8.4 = 1.3

The reasons for K_F much greater than 1 are: (i) primary is delta connected (ii) secondary is solidly grounded and (iii) zero sequence impedance is much smaller (3%) as secondary is Zig Zag connected.

The phase voltages at Receiving Station bus are:

V_R = 0

$V_Y = V_B$ = 5.6 kV (88%)

EFF = 0.88 < 1.4

The system is effectively grounded for fault very near to Receiving Station bus. None of the connected feeders will experience over voltage.

Case 3.2

In Fig 11, a sample ring main is considered for simulation. It has 7 substations and distance between substations is 500 meters. The cable parameters used for simulation are [5]:

Cable size: 3C x 300mm^2 Al

$Z_P = Z_N$ = 0.123 + j 0.102 Ω/KM

Z_O = 1.173 + j 0.427 Ω/KM

For a ground fault on R phase at remote Bus8,

$I_{1P} = I_R$ = 2.184 kA

The ground fault current is only 26% of three phase fault current at Bus1 (2.184 / 8.4 = 0.26),

The phase voltages at faulted Bus 8, intermediate Bus 5 and Receiving Station Bus 1 are shown in Table 2.

	Bus 8		Bus 5		Bus 1	
	Voltage kV	EFF	Voltage kV	EFF	Voltage kV	EFF
V_R	0		2.513	0.40	5.865	0.92
V_Y	8.134	1.28	6.961	1.10	5.933	0.93
V_B	9.951	*1.57*	8.409	*1.32*	6.380	1.00

Table 2

(i) At the remote Bus 8, EFF > 1.4, hence locally it is 'non-effectively grounded'.

(ii) At intermediate Bus 5, EFF is marginally less than 1.4, just managing to be categorized as 'effectively grounded'.

(iii) At the Receiving Station Bus 1, EFF is ≤ 1 and it is 'effectively grounded'.

From results of above case studies, the following observations are made:

a) Irrespective of fault location, EFF at Receiving Station is ≤ 1.0. This has important implication that at Receiving Station, voltages of un-faulted phases *do not rise* above normal phase voltage. Hence voltage of other feeders (Ring Mains) connected to the bus will not experience over voltage.

b) As the fault location is moved away from Receiving Station, EFF at remote location is higher. It can cross the threshold limit of 1.4. At the remote locations it is no longer effectively grounded system. But in substations closer to Receiving Station even on the faulted feeder, EFF < 1.4. Thus over voltage is limited to *local area near to faulted point.*

The standards recognize this fact. Even in case of solidly grounded system, some parts of system may not be effectively grounded for particular fault location. *The aim of solid grounding is to limit over voltages to local areas and over voltages are not felt globally over entire system for fault in any one location.*

In this context, the relevant extract (Cl 3.3) from the IEEE Guide [6] is reproduced below:

"The overvoltage on un-faulted phases is also of concern because it is applied to the equipment of customers served from distribution transformers connected from phase to neutral on four-wire systems. Thus, even if arrester application is not a limiting factor, the EFF must not be allowed to increase to a level that can impose intolerable over voltages on customer equipment. As a rule of thumb, EFF at the substation should not exceed 1.25, which is obtained approximately when $X0/X1$ = 2. Preferably EFF should not exceed 1.1, which requires an $X0/X1$ of 1.3 or less. *At locations remote from the substation, the EFF will exceed these values because of the effects of line impedance. However, the lower values at the substation are desirable to mitigate the effect of the line impedance and to localize the over voltages near the fault location rather than requiring the whole system to withstand them.* It is realized however, that higher $X0/X1$ ratios have been used satisfactorily".

It is possible to choose NGR value so that K_F = 0.4 to 0.5, with EFF nearly equal to 1.4 for faults very near to source transformer, anticipating lower ground fault current. But in this case, no margin is available in EFF. For any fault even slightly away from transformer, voltage at local substation will rise resulting in EFF > 1.4. This is the reason why the standards recommend that for effectively grounded system, NGR is sized such that $K_F \geq 0.6$.

For academically oriented, a more precise definition for effectively grounded system is that $(X_0 / X_1) \leq 3$ and $(R_0 / X_1) \leq 1$. The definitions given above for K_F and EFF will suffice for use by practicing engineers.

Summarising:

(i) Size NGR based on $K_F \geq 0.6$ for a ground fault on terminal of transformer

(ii) Grounding effectiveness at remote locations is based on evaluating EFF at these locations

(iii) Irrespective of type of grounding, use 100% arrestor for voltages 33kV and below.

More than 70% faults are single phase to earth faults. It is important to positively identify and isolate these faults. Current based earth fault protections are more sensitive and selective than voltage based system.

In solidly grounded system high magnitude of earth fault current is always ensured for faults anywhere in the system. It is easy to design sensitive earth fault detection system. However the damage at fault point could be severe. Also equipment which experiences the let through current, undergoes higher dynamic stress.

If we restrict the earth fault current below a certain level by introducing an impedance in the neutral, the healthy phase voltages rise to L-L values thereby stressing the insulation of *all* equipment connected to the system. This is also detrimental to the health of the equipment particularly in a network with aging equipment.

Effectively earthed system is balance between the two. We get sufficiently large current ensuring positive relay operation; at the same time the healthy phase voltages do not rise to dangerous levels.

The results presented here are outcome of simulation studies done by Sonu Karekar, Amol Salunke and Ashutosh Pailwan.

5.0 Mirror Image concepts

For want of a better term, the title for this section has been chosen as above. It also covers concepts which are ‘close and inverted’. It could also be termed as description of ‘twins’.

5.1 Capacitor and Reactor

5.1.1 Voltage across capacitor can’t change instantly.

I = C dV/dt.

But the current can reach very high values immediately after switching. Refer Fig 12. It could be very large multiples (> 100) of rated current. But it dies down very rapidly as time constant (CR) is in µsec. The inrush appears as a pulse of very large magnitude.

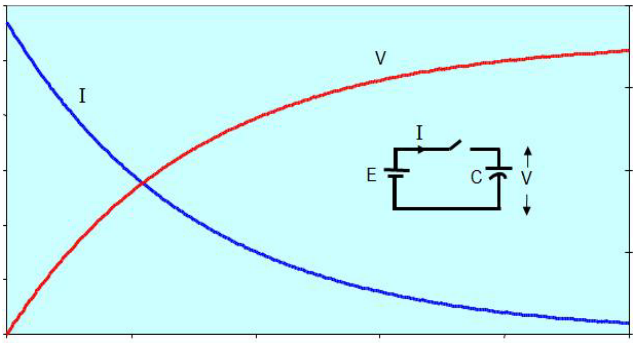

Fig 12

5.1.2 Current through inductor (reactor) can't change instantly.

E = L dI/dt.

The voltage across reactor can reach supply voltage immediately after switching. Refer Fig 13. The time constant is in msec.

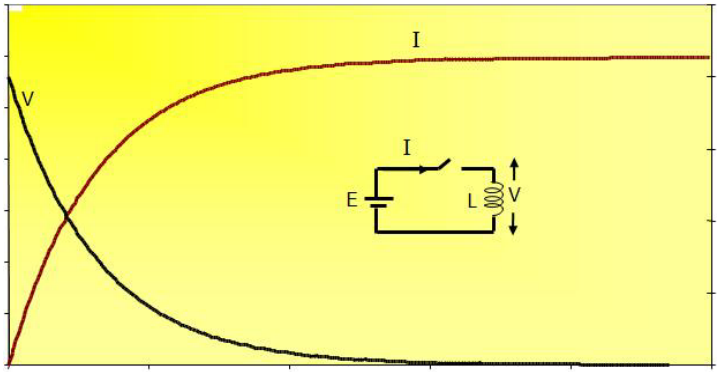

Fig 13

5.1.3 Inductor is connected in *series* with capacitor (Fig 14) to limit peak inrush current during switching on capacitor banks.

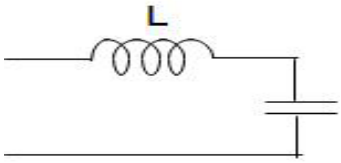

Fig 14

5.1.4 Capacitor is connected in *parallel* with inductor (Fig 15) to limit steepness of incoming surge voltage.

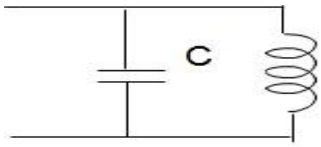

Fig 15

Stator windings of large alternator and motor are basically large inductance coils. Any very steep front voltage wave entering the stator coils will damage the first few turns of the windings. To flatten out the steep wave front, capacitor is placed ahead of alternator or motor (Fig 16). For this reason, it is termed as 'surge capacitor'.

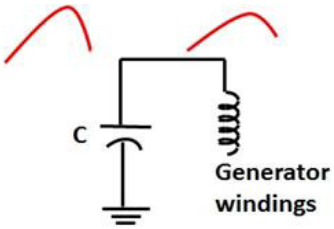

Fig 16

Thus reactor and capacitor are natural twins in power system components.

5.2 CBCT and Open Delta PT

5.2.1 CBCT

In solidly grounded system, the earth fault current magnitude is high and comparable to three phase fault current. In this case, residually connected CT connection (also termed Holmgreen connection) is used for connection to earth fault relaying element. Secondary reflected phase currents are *physically summated*. Refer Fig 17.

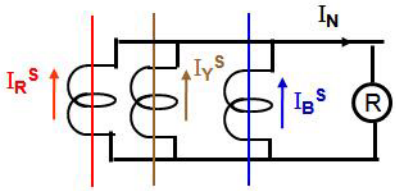

Fig 17

$I_N = I_R^S + I_Y^S + I_B^S$.

In low resistance grounded system, where the earth fault current magnitude is limited to, say 200A to 400A, Core Balance Current Transformer (CBCT) is used for connection to earth fault relaying element improving sensitivity of fault detection. CBCT has a torriodal core on which secondary is wound. It encircles a cable with all three conductors (R,Y,B). Output from secondary is proportional to net flux produced by sum of three phase currents. Refer Fig 18.

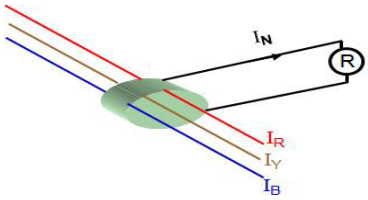

Fig 18

Under healthy conditions, vector sum of the three phase currents is zero.

$I_R + I_Y + I_B = 0$

The resulting flux in the core is zero and current output from CBCT is nil. Since CBCT output is zero under healthy conditions, its turns ratio is *not* chosen based on maximum line current magnitude but on desired value of minimum primary ground fault current to be detected. Typically it is 50/1.

During line to ground fault,

$I_R + I_Y + I_B = I_N = 3I_0$.

To detect small earth fault currents (say 20A), in low resistance grounded system, CBCT is employed. Numerical relays give an option to connect CBCT output to relay as direct input rather than summating three phase currents through software.

Generally CBCT output is wired to a DMT element (50N/2).

5.2.2 Open Delta PT

In ungrounded or very high resistance grounded system, ground fault current is too low (less than 10 to 15A) for current based protection to pick up. Ground fault detection is achieved using open delta PT connection.

Refer Fig 19.

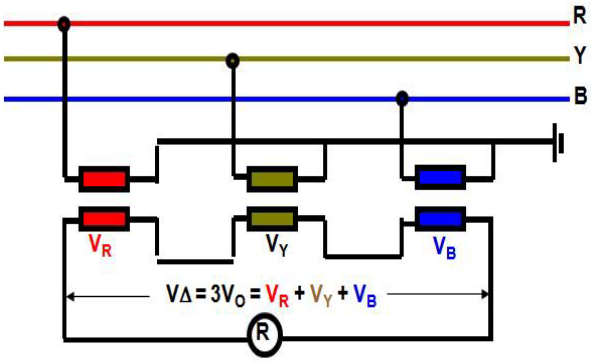

Fig 19

Under healthy conditions, vector sum of the three phase voltages is zero.

$V_R + V_Y + V_B = 0$

During line to ground fault,

$V_R + V_Y + V_B = V_\Delta = 3V_0 = 3V_P$

PT connected in open delta measures zero sequence voltage.

For example, consider a 600 MW unit with rated voltage of 20kV.

Phase voltage, $V_P = 20/\sqrt{3} = 11.55$ kV.

The unit is very high resistance grounded. In case of ground fault on 20 kV side, voltage sensed by open delta PT on primary side:

$V_\Delta = V_R + V_Y + V_B = 3 \times 11.55 = 34.65$ kV

If the single phase PT ratio is $(20/\sqrt{3})$ kV / (110/3) kV,

TR = Turns Ratio = $(20{,}000/\sqrt{3})$ / (110/3) = 315

Open delta voltage on secondary side = V_Δ / TR = 110V

The relay connected across open delta PT can sense the over voltage and initiate alarm / tripping.

It is interesting to point out that open delta voltage is obtained by physically connecting three PT outputs in *series* (Fig 19). In case of residually connected CT connection, the relay current is obtained by physically connecting three CT outputs in *parallel* (Fig 17).

The thing common in CBCT (Fig 18) and Open delta PT (Fig 19) functioning is that both work on the principle of “Resultant” magnitude.

Thus, CBCT and open delta PT are twins for ground fault detection.

5.3 Phase voltage and Zero Sequence voltage during ground fault

5.3.1 Phase Voltage

Phase voltage is high at source and almost zero at the fault point. Under voltage relay located near the fault location responds.

5.3.2 Zero Sequence voltage

Source (generator) does not intentionally produce any zero sequence voltage and hence zero sequence voltage at source is nearly zero. At the point of ground fault, phase voltage at faulted point collapses but zero sequence voltage is high [7]. Refer Fig 20. Under voltage relay connected to phase PT and over voltage relay connected to open delta PT respond. Thus in both cases, voltage relays close to fault only respond.

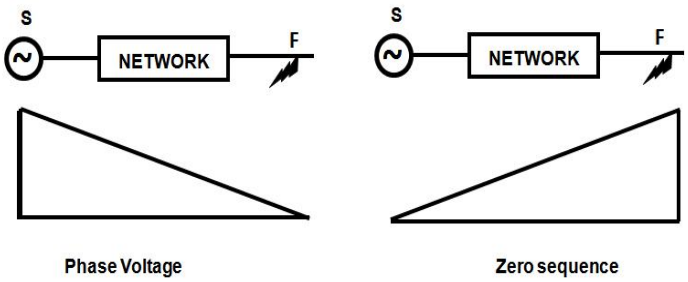

Fig 20

Also to be noted is that the phase voltage at faulted point is nearly zero *irrespective* of type of grounding of source. However zero sequence voltage at faulted point varies widely depending on type of grounding. It is high in ungrounded system and low in solidly grounded system. For illustration, zero sequence voltage V_0 is evaluated at the faulted point F_2, Fig 10 considered in Cl 4.0, Case 2. Values for three types of source grounding obtained from simulation are given below:

Ungrounded source, V_0 = 19 kV

Effectively grounded source (X_R = 1Ω), V_0 = 12.3 kV

Solidly grounded source = V_0 = 10.5 kV

It is myth to assume that neutral shift does not occur in solidly grounded system, only its magnitude is less.

Sonu Karekar helped in simulating the above case.

5.4 Line to ground fault reflection in transformer

5.4.1 Delta – Star transformer

Line to ground fault on star side of transformer gets reflected as Line to Line fault on delta side of transformer. Refer Fig 21.

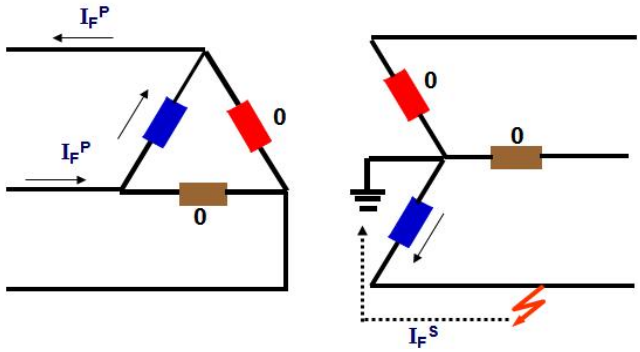

Fig 21

The current distribution follows two cardinal principles: (i) KCL (Kirchhoff's Current Law) (ii) AT (Ampere Turn) balance of windings on same limb of transformer

5.4.2 Star – Delta transformer with NGT

Line to ground fault on delta side of transformer grounded through Neutral Grounding Transformer (NGT) gets reflected as Line to Line fault on star side of transformer. Refer Fig 22.

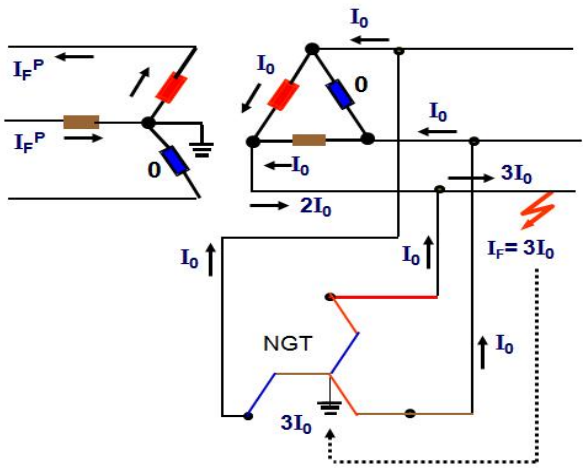

Fig 22

5.4.3 Star – Zig Zag transformer

Conceptually it is same as (5.4.2) in which zero sequence isolation between primary and secondary is obtained. Secondary neutral is available for grounding. Here also, Line to ground fault on Zig Zag side of transformer is reflected as Line to Line fault on star side of transformer [8]. Refer Fig 23.

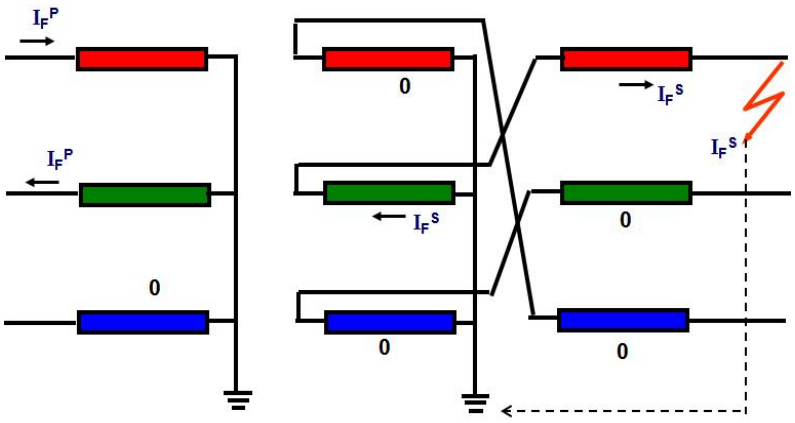

Fig 23

5.4.4 Remarks on vector group selection

In an EHV transformer with HV side voltage of 132 KV and above, it is preferred to have the HV side as Star to have a commercially cheaper transformer, as graded insulation can be used.

One of the basic principles of ground fault relay coordination is to achieve zero sequence isolation between LV and HV side of transformer. In this context, the least preferred is Star-Star vector group, especially if both the primary and secondary neutrals are solidly grounded. It is mitigated to a large extent if LV Star neutral is grounded through resistance to limit the ground fault current to less than a few hundred amperes, as in Station Transformer in power plant applications. The reflected fault current on HV side in this case is negligible.

The next choice is to Star-Delta vector group which offers zero sequence isolation between secondary and primary. However, if we want to have a sensitive and selective earth fault protection system on the LV side, then we need to use a NGT (Neutral Grounding Transformer) to create a grounded neutral and provide a return path for the earth fault current.

Zig Zag on LV side of transformer combines the benefit of both the system. The neutral of the Zig Zag winding can be grounded like a Star system, thereby enabling provision of sensitive and selective earth fault protection. Also zero sequence isolation is 'naturally' obtained as earth fault on Zig Zag side gets reflected as line to line fault on the HV side.

5.5 Disposition of conductor and other metal parts – Single core cable, IPBD and ACSR conductor

5.5.1 Single Core Cable

In single core cable, the conductor in the middle is either copper or Aluminum and the armour surrounding conductor and XLPE/PVC insulation is non-magnetic, usually Aluminum. Armour is provided for following reasons:

(a) It provides mechanical protection for insulation against external intrusion.

(b) It provides metallic return path for earth fault current. This results in lower touch and step potentials.

5.5.1.1 Aluminum vs Steel armour in Single Core Cable

In the case of three core cable, under normal operating condition, $I_R+I_Y+I_B = 0$. Hence, the net flux coming out of cable is zero. In this case steel armour can be used. In the case of single core cable, the net flux coming out is proportional to current in conductor and it is not zero. Hence only non magnetic metal like Aluminum is used as metallic shield in single core cable. FEM analysis is done to evaluate the eddy current loss with Steel and Aluminum armour. 11kV, 1000 mm^2, Al conductor, single core cable with maximum current carrying capacity of 1000 A is considered for simulation.

Refer Fig 24 for major cross sectional details. Results are summarized in Table 3.

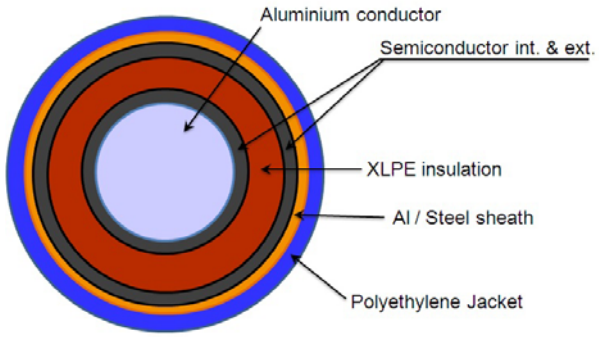

Fig 24

Armour Material	Resistivity ρ $10^{-7}\Omega$-Met	Relative Permeability	Skin depth (mm) @ 50Hz	Eddy current loss – Watt/meter
Aluminum	0.35	1	13.2	33
Steel	1.43	1000	2.69	151

Table 3

Thickness of armour is 2.5mm. If it is steel it is almost equal to skin depth. If it is Aluminum, it is much less than skin depth. Eddy current loss in Steel is nearly 4.6 times that of Aluminum. Also hysteresis loss is absent in case of Aluminum as it is non-magnetic whereas in steel it is appreciable. Thus the heat generated due to eddy current and hysteresis loss in steel armour is significantly higher compared to Aluminum armour of same thickness which will result in derating of cable. Hence Aluminum is preferred as armour for single core cables.

FEM analysis was done by Sairam under guidance of Prof S V Kulkarni. Talande furnished cable parameters and participated in analysis.

5.5.1.2 Solid bonded system

If both ends are bonded, circulating current almost equal to conductor current will flow in armour. This current is *independent* of cable length. The additional power loss due to circulating current in armour will increase the temperature further. Derating of cable has to be done to limit the temperature to allowable limits as per type of insulation used (XLPE = 90°C, PVC = 70°C). For this reason, solid bonding is rarely used in single core cable.

5.5.1.3 Single point bonded system

Only one end of armour (usually sending end) is earthed and the other end is insulated. This is called single point bonding. Refer Fig 25.

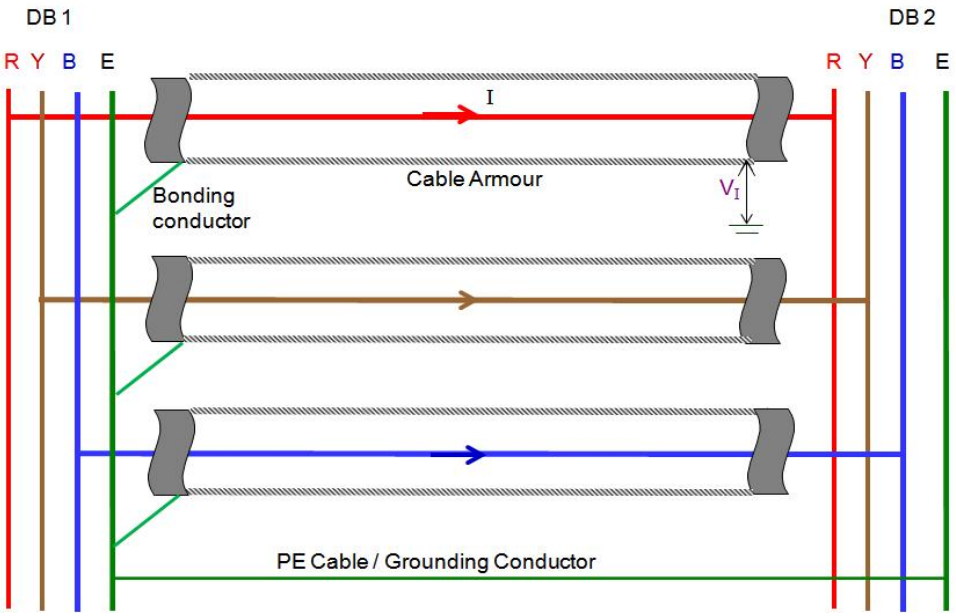

Fig 25

This prevents circulating current flow in armour. However, in this method, the free end of the armour (insulated) would develop induced voltage V_I. Indian Electricity Rules permit 65 volts as the limit of such induced voltage. Voltage induced in armour is determined by armour diameter, spacing between cables (trefoil or flat formation) and phase currents. For LV and MV cables, induced voltage in armour is approximately given by $V_I \cong$ 55mV / Amp / KM.

For example, for a current of 750A and cable length of 0.5KM, induced voltage in armour = 0.055 x 750 x 0.5 = 23V.

Unlike solid bonding, single point bonding creates discontinuity in armour circuit and inhibits flow of fault current returning back to source via a metal. In these cases, it is mandatory to provide additional grounding conductor between two distribution boards connected by single core cables. Refer Section 5.4.3 of IEEE Std 575[9].

In case of an earth fault in any outgoing feeder of the receiving end distribution board, the separate ground conductor facilitates return of the earth fault current through the metal to the upstream source, as shown in Fig 26.

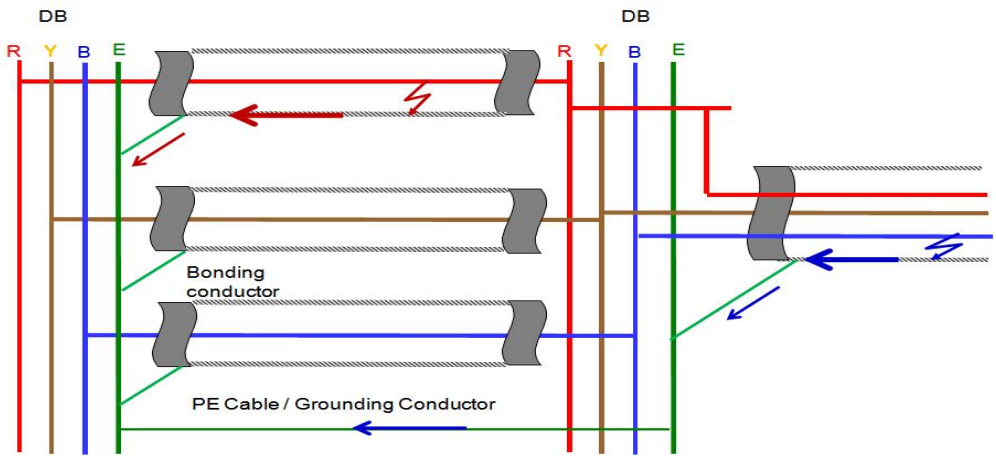

Fig 26

5.5.2 Isolated Phase Bus Duct

Isolated phase duct consists of tubular conductor of either Aluminum or copper. Insulation medium is air. The protective enclosure is a tubular conductor of either Aluminum or Steel. Typical sectional view of 24kV, 12kA IPBD is shown in Fig 27.

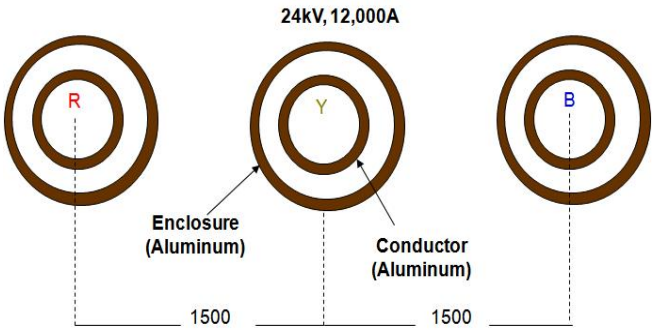

Fig 27

The major dimensional details are as follows:

Outer diameter of conductor: 500 mm

Thickness of conductor: 12 mm

Outer diameter of enclosure: 1000 mm

Thickness of enclosure: 8 mm

C/S area of conductor = $(\pi/4)\ (500^2 - 476^2)$ = 18,398 sq.mm

C/S area of enclosure / Sheath = $(\pi/4)\ (1000^2 - 984^2)$ = 24,932 sq.mm

Bonded housing arrangement is used in majority of applications. The enclosure for each phase is continuously bonded physically and electrically throughout its run. The enclosures for the three phases are shorted at the extreme ends. The situation is akin to solid bonded system in case of single core cable. The magnitude of current flowing in enclosure is almost same as that of main conductor (75 to 90%) but in opposite direction. For the above example, cross section of enclosure is even greater than that of main conductor resulting in reduced resistance and lower enclosure losses. The magnetic field due to current in enclosure opposes the field due to current in main conductor at every instant and the resultant flux is very small. The force on conductor or enclosure is proportional to current flowing through it and the flux density of field in which it is embedded. Since the resultant flux is very small, forces on conductor and enclosure are less. Especially during short circuit condition, mechanical stresses on conductor, enclosure and support insulators are minimal. Since the resultant flux is small, IPBD can be supported and routed besides steel structures without fear of excessive heating due to hysteresis and induced eddy currents within steel members. As a measure of 'abundant caution', earthing conductors (e.g.65x10mm GI strip) are run in parallel with IPBD enclosures and bonded at the ends and at intermediate points. Compared to the enclosure resistance, earthing conductor resistance is too high. Most of the current is carried by enclosure and very little by parallel earthing conductor.

Summarising, the main functions of enclosure for IPBD are as follows:

(a) It provides mechanical protection for conductor against external intrusion.

(b) It acts as a magnetic shield allowing only very little flux to escape outside enclosure. Nearby steel structures do not experience hot spots due to induced currents.

(c) Mechanical stresses on conductor, enclosure and support insulators under normal and short circuit conditions are considerably reduced.

Sandeep Lodh's query was the trigger that prompted the author to study similarities between single core cable and IPBD. The author acknowledges D Guha's contribution towards not only clarifying finer points on comparison between single core cable and IPBD but also offering critiques on different topics covered in this article.

5.5.3 ACSR conductor

It is an *inverted version* of the two cases discussed above. The outer core is made of Aluminum strands and is the conductor. Aluminum has good conductivity, low weight and lower cost compared to copper. The inner core is made of strands of steel. Refer Fig 28. It is akin to a messenger wire over which conductor is wrapped. Steel core is provided to increase the tensile strength of cable. Tensile strength to weight ratio of ACSR is almost twice that of only Aluminum conductor. Hence with ACSR, span length can be much higher without increasing sag.

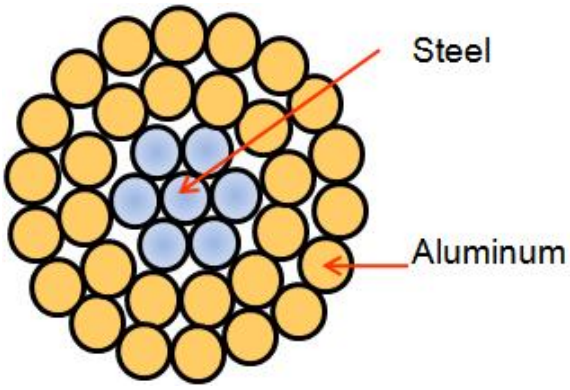

Fig 28

Since relative permeability μ_R of steel is very high (1000) compared to Aluminum (1), the reactance of steel wire is much higher. It offers high impedance to flow of AC current. Most of the current is carried by Aluminum wire and very little by steel. Hence higher resistance of steel does not add to significant increase in power losses as the current itself in steel wire is low.

Thus we have two examples where sheath or enclosure surrounds the conductor (single core cable and IPBD) and another example where conductor surrounds the steel wire (ACSR).

5.6 Transposition – EHV Overhead line and EHV Cable

5.6.1 EHV Overhead line

In case of EHV lines of very long length (more than 300 KM), *the conductors are transposed* to minimize voltage unbalance. Let (1), (2) and (3) be three points in space with respect to centre line of tower (Fig 29). R phase conductor occupies position (1) in first section, position (2) in second section and position (3) in last section. Y phase and B phase conductors are similarly transposed. Two figures of merit are used to judge effectiveness of transposition.

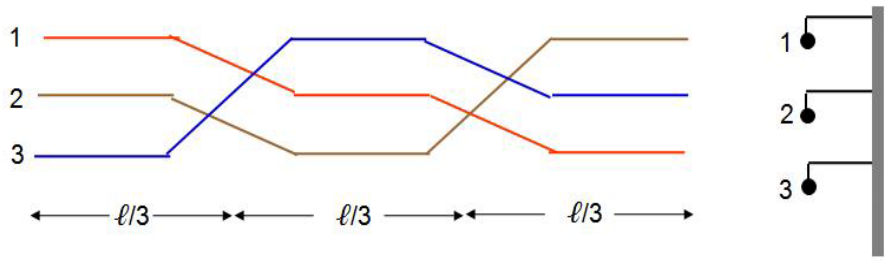

Fig 29

I_1, I_2, I_0: Positive, negative and Zero sequence currents

Zero sequence unbalance factor = $M_0 = I_0 / I_1$

Negative sequence unbalance factor = $M_2 = I_2 / I_1$

Ideally if positive sequence voltage is applied to line, only positive sequence current should flow, i.e., $M_0 = M_2 = 0$.

However due to unsymmetrical conductor geometry in space with respect to tower, in un-transposed line, M_0 is about 1% and M_2 is 3 to 20%. Refer Section 4.8 [10]. In this case, for application of positive sequence voltage, 1% zero sequence current and 3 to 20% negative sequence current can flow which is not desirable. In case of perfectly transposed lines, $M_0 = M_2 = 0$.

5.6.2 EHV Cable

In case of EHV cables, the usual practice is to 'transpose' the *sheath of individual EHV cables.* The correct terminology used for cables is 'cross bonding'. Single core EHV cable has a central conductor of Copper with XLPE insulation over the conductor. Over the insulation, metallic sheath either of Aluminum or Lead is provided. When the conductors carry current, voltage induced due to mutual induction on metallic sheath could be excessive.

If the sheaths are bonded at both the ends (solid bonding), the circulating current in sheath is high (almost equal to conductor current) resulting in continuous dissipation of heat. In this case, cable has to be derated to a lower value so that temperature rise in conductor is within limits applicable for XLPE insulation. By cross bonding the sheath, voltage induced and the resulting circulating current in sheath is reduced to a minimum. Refer Fig 30. For 220 kV, 1200mm^2 Cu cable, laid in trefoil, sheath (corrugated Aluminum) cross bonded, carrying a current of 840A, maximum sheath voltage is 25V and sheath current is negligible. Amol Salunkhe did the simulation using PSCAD to obtain these figures.

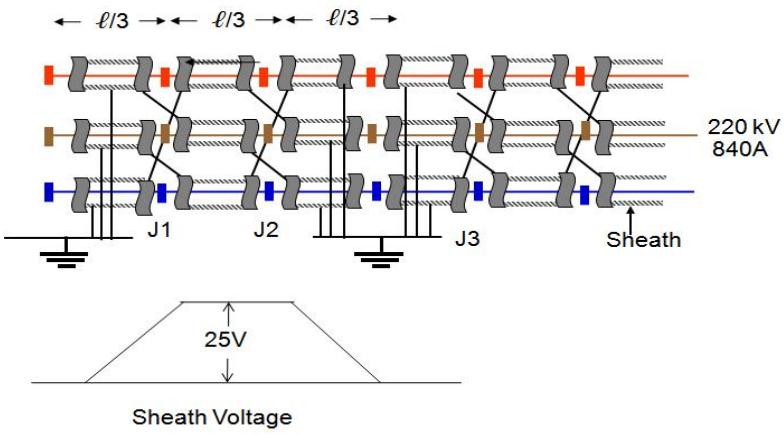

Fig 30

Thus, the conductor is transposed in EHV over head lines while the sheath is transposed in case of EHV cables.

6.0 Conclusion

In this article, we have paraded a few cases in power engineering that practicing engineers find it difficult to comprehend. The underlying concepts behind the cases are explained. Also from the vast pool of information available, there is a pattern to be unearthed and dots to be connected. These are presented under the section 'mirror image concept'. We will elaborate on other difficult to comprehend cases in future articles.

7.0 References

[1] 'Reactive Power: A Strange Concept?' - R Fetea and A Petroianu, University Of Cape Town, South Africa.

[2] 'A monograph on reactive power', M Ramamoorty, ERDA, India, April 2005

[3] 'Reactive Compensation Fundamentals for Distribution Networks' - K Rajamani and Bodhlal Prasad, IEEMA Journal, Aug 2009, pp 112- 115.

[4] 'Grounding of Electrical System – Part II', K Rajamani, IEEMA Journal, June 2006, pp 51 to 58.

[5] 'Cable sequence impedance measurement at site', K Rajamani and Bina Mitra, IEEMA Journal, August 2013, pp 84 to 86.

[6] 'IEEE C62.92.4-1991 – IEEE Guide for the Application of Neutral Grounding in Electrical Utility Systems, Part IV—Distribution'

[7] 'Symmetrical components for Power Systems Engineering', J Lewis Blackburn, Marcel Dekker, 1993

[8] 'Zig Zag Transformer - Fault Current Distribution, Short Circuit testing and Single Phase loading', K Rajamani and Bina Mitra, IEEMA Journal, July 2013, pp 84 to 91.

[9] 'IEEE Std 575 - IEEE Guide for the Application of Sheath-Bonding Methods for Single-Conductor Cables and the Calculation of Induced Voltages and Currents in Cable Sheaths'

[10] 'Analysis of faulted power systems', P M Anderson, IEEE Press, 1995

ieema journal

Conceptual Clarifications in Electrical Power Engineering Part-2

Dr K Rajamani,

Reliance Infrastructure Ltd., Mumbai

(March 2017, IEEMA Journal, Page 65 to 76)

Conceptual Clarifications in Electrical Power Engineering – Part 2

K Rajamani, Reliance infrastructure Ltd

"It is important to simplify the explanation, not the subject"-
YouTube video on Physics – Henry Reich

1.0 Introduction

As in Part 1, an attempt has been made in this part to unravel the underlying concepts in selected topics in power engineering. The topics covered are:

(a) Effect of phase shift introduced by transformer on angle stability
(b) Paralleling and synchronizing of transformer
(c) Ampere Turn Balance in Transformer
(d) Percentage impedance for three phase and equivalent three single phase transformers
(e) Voltage dip experienced at LV side of transformer for faults on HV side
(f) Effect of LV side Unbalance current on HV side reflected current

2.0 Phase Shift and Stability

We will prove that phase shift introduced by (Y-Δ) transformer cannot influence power transfer magnitude**.**

2.1 In a power network, transformers that introduce phase shift are present. The most popular vector group in this category is (Y-Δ) transformer which creates 30^0 phase shift in voltage and current between two sides of transformer. When balanced power flow analysis is done for networks having transformers with different vector groups, it is advantageous to work in pu for following reasons:

a) Per unit impedance (or % impedance) is same whether referred to primary or secondary.

b) The current magnitude in pu is same on primary and secondary side. However, a phase shift of 30^0 is introduced between primary and secondary currents.

c) The voltage in pu on primary and secondary side are same if the transformer is unloaded (current is zero). If the transformer is loaded, voltage on primary side is affected only to the extent of regulation (IX drop) compared to secondary side. A phase shift of 30^0 is further introduced between primary and secondary voltages.

For simplicity sake, assume that (Y-Δ) transformer is on nominal tap. This does not affect conclusion even if tap is off nominal. The hand calculations presented in sequel are easier to understand with nominal tap.

For illustration, consider the network shown in Fig.1

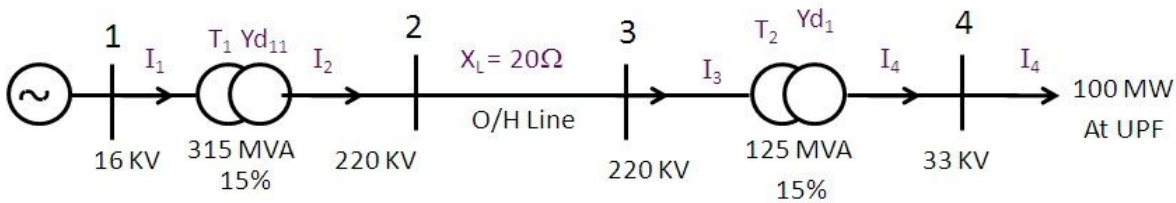

Fig 1

On 100 MVA base,

$$X_{T1} = \frac{100}{315} x\, 0.15 = 0.0476\, pu$$

$$X_{T2} = \frac{100}{125} x\, 0.15 = 0.12\, pu$$

$$X_{Base} = \frac{220^2}{100} = 484\Omega$$

$$X_L = \frac{20}{484} = 0.0413\, pu$$

2.2 First, power transfer is computed in per unit *without* considering phase shift across transformer. Choose V_4 as reference.

$V_4 = 1\angle 0$

Since load is 100 MW at UPF,

$I_4 = 1\angle 0$

Further it may be noted that in pu

$I_1 = I_2 = I_3 = I_4$

$V_3 = V_4 + I_4 \; x\, jX_{T2}$

$= 1\angle 0 + 1\angle 0 \times 0.12\angle 90^0$

$= 1.0072 \angle 6.8428^0$

$I_3 = I_4 = 1\angle 0$

$V_2 = V_3 + I_3 \; x \; jX_L$

$= 1.0072\angle 6.8428 + 1\angle 0 \; x \; 0.0413\angle 90^0$

$= 1.0129 \angle 9.1629^0$

$I_1 = I_2 = 1\angle 0$

$V_1 = V_2 + I_2 \; x \; jX_{T1}$

$= 1.0129\angle 9.1629 + 1\angle 0 \; x \; 0.0476\angle 90^0$

$= 1.0216 \angle 11.7994^0$

Power transfer can be calculated in two ways:

(a) $P = R.P. [V_1 I_1^*]$

$= R.P. [1.0216\angle 11.7994^0 \; x \; 1\angle 0]$

$= 1$ pu

(b)

$$P = \frac{|V_1| \, |V_4|}{(X_{T1} + X_L + X_{T2})} \sin(\delta_1 - \delta_4)$$

$$= \frac{1.0216 \; x \; 1.0}{(0.0476 + 0.0413 + 0.12)} \sin(11.7994 - 0)$$

$= 1$pu … (1)

The above matches with assumed load of 1pu (100MW).

2.3 Now, the same exercise will be carried out *considering* phase shift due to (Y-Δ) transformation. Assume vector group of Transformer T_2 is Yd1. In this case, voltage and current on star side (220 kV) lead voltage and current on delta side (33 kV) by 30^0.

On 33kV side,

$V_4 = 1\angle 0$

$I_4 = 1\angle 0$

On 220kV side,

$V_3 = 1.0072 \angle 6.8428^0 + 30^0$

$= 1.0072 \angle 36.8428^0$

$I_3 = 1 \angle 30^0$

V_3 in pu accounts for IX drop across transformer T_2.

$V_2 = V_3 + I_3 \; x \; jX_L$

$= 1.0072\angle 36.8428^0 + 1\angle 30 \; x \; 0.0413\angle 90^0$

$= 1.013 \angle 39.1589^0$

$I_2 = I_3 = 1\angle 30^0$

$V_1 = V_2 + I_2 \; x \; jX_{T1}$

$= 1.013\angle 39.1589 + 1\angle 30^0 \; x \; 0.0476\angle 90^0$

$= 1.0216 \angle 41.7994^0$

On 220kV side,

$V_2 = 1.013 \angle 39.1589^0$

$I_2 = 1 \angle 30^0$

On 16kV side,

$V_1 = 1.0216 \angle 41.7994^0 + 30^0$

$= 1.0216 \angle 71.7994^0$

$I_1 = 1\angle 30^0 + 30^0 = 1\angle 60^0$

$P = R.P. [V_1 I_1^*]$

$= R.P. [1.0216\angle 71.7994^0 \; x \; 1\angle -60^0]$

$= 1$ pu

This is same as obtained *without* taking into account phase shift across (Y-Δ) transformer.

Thus, for balanced (positive sequence) load flow calculations, phase shift due to vector group of transformer will not influence power transfer calculations.

The above conclusion is also in line with common sense reasoning. Input and output power (MW) of ideal transformers is same (neglecting losses) and this is true irrespective of vector group of transformer.

Another way to look at the problem is to consider a generator connected to a resistive load through Yd9 (rare vector group, given here for just illustration) transformer which introduces 90° phase shift. In this case, will the resistor look like an inductor as seen from generator? This is not possible as *both* voltage and current are shifted by 90° and the generator will still see the load as resistor only.

2.4 The power transfer relation used in stability analysis is given by (Fig.2)

$$Power\ Transfer\ P = \frac{E_1 E_2}{X} \sin\delta \qquad \text{... (2)}$$

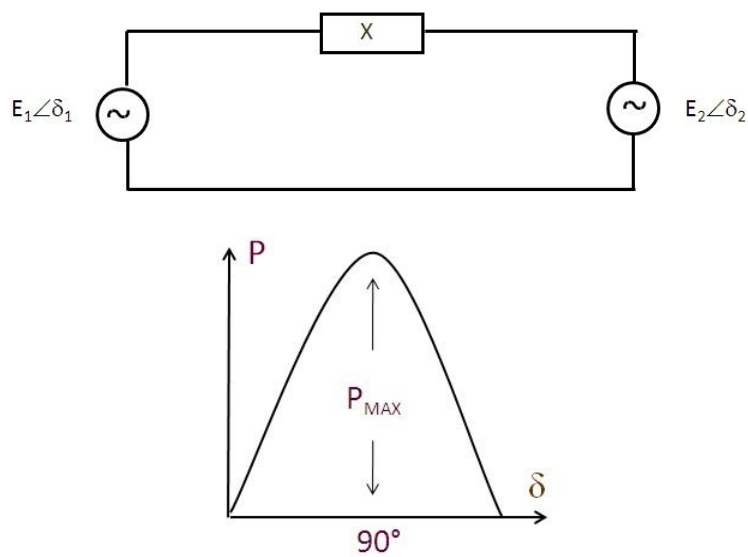

Fig 2

Torque angle $\delta = \delta_1 - \delta_2$

The stability limit is reached when is 90^0.

It must be emphasised that Eqn. (2) used for checking stability limit implicitly ignores phase shift across transformer due to different vector groups. This is reaffirmed by the straightforward application demonstrated in Eqn. (1) of Cl 2.2.

2.5 Remarks on PMU data analysis

PMU (Phasor Measurement Units) are deployed in EHV (765 / 400 / 220 kV) networks at different locations for Wide Area Monitoring. There are many transformers present in EHV level but all of them are either autotransformers or star-star transformers which do not create phase shift in either voltage or current between secondary and primary. Thus, comparison of voltage phase angle of different buses of the network based on PMU data is feasible.

Since PMU measures *actual* angle of phases V_R, V_Y and V_B, any phase shift introduced by vector group [(Y-Δ), (Y-Z), etc] or phase shifting transformer will be reflected in measurement set. Hence, stability limits in these cases cannot be assessed by direct comparison of raw data of phase angles between different buses unless phase shifts introduced by transformers are accounted for.

The author benefitted immensely from the discussions with Prof M V Hariharan and Prof Anil Kulkarni on this topic.

3.0 Paralleling and Synchronizing

3.1 Parallel Operation of Transformers

In Fig 3, two transformers to be paralleled are shown.

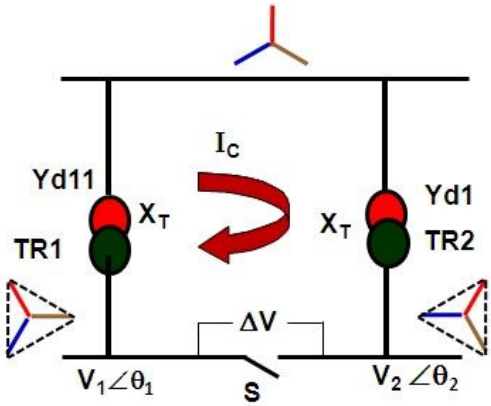

Fig. 3

Assume the vector group of TR1 is Yd11 and TR2 is Yd1. For common primary voltage, voltages on secondary side on either side of switch (S) will be $V_1\angle\theta_1$ and $V_2\angle\theta_2$. For the selected vector group, θ_1 = +30° and θ_2 = -30°. Choosing V_1 as reference, voltages on either side of switch are $V_1\angle 0$ and $V_2\angle$-60°. Differential voltage $(\bar{V}_1 - \bar{V}_2)$ appearing across switch (Fig 4):

$\Delta V = \text{sqrt}\,[V_1^2 + V_2^2 - 2\,V_1 V_2 \cos\theta]$

Let $V_1 = V_2 = 1.0$ pu and θ = -60°.

$\Delta V = 1.0$ pu

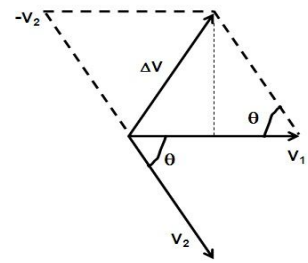

Fig.4

Assume $X_T^1 = X_T^2 = 0.1$ pu (10%)

After closing the switch without any external load, circulating current:

$I_C = \Delta V / (X_T^1 + X_T^2) = 5$ pu

500% of rated current will circulate between the transformers which will damage the equipment.

Hence for paralleling transformers, it is essential that vector group of transformers by *clock position* must match to avoid circulating current. In Mumbai Transmission, Yd11 and Yz11 transformers operate in parallel without any problem as the clock positions of both transformers are same, though the secondary winding connections are delta and zig zag. Similarly, it is possible to operate Yd1 and Dy1 in parallel as the clock position is same in both transformers

Next, selection of vector group of transformers in power plant is discussed. Typical SLD is shown in Fig 5. Generated power is evacuated to system (Bus2) through GT (Generator Transformer).

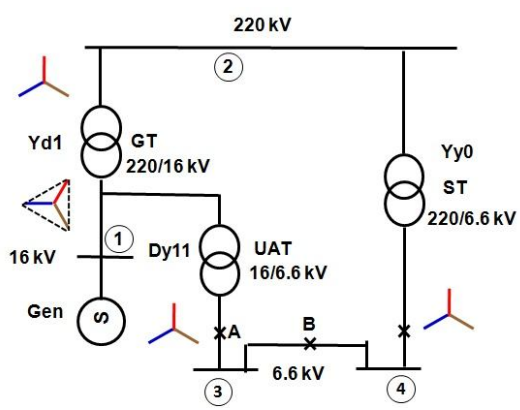

Fig. 5

During start-up of a unit, there is no power at the generator terminals. During this time, the unit Bus3 is fed from the station transformer through station Bus4 and station to unit tie by closing tie Breaker

(Bkr B). Post synchronization, when the unit picked up load, the supply to unit bus is switched over to UAT *without interruption*. UAT and ST are momentarily paralleled by closing Bkr A and then Bkr B is tripped. But for safe momentary paralleling, secondary voltages of UAT and ST *must be in phase*. Usually vector group of ST is fixed as Yy0. Assume vector group of GT is Yd1. To match phase voltages on secondary side, vector group of UAT must be chosen as Dy11. If vector group of GT is chosen as Yd11, vector group of UAT have to be Dy1 to match phase voltages on secondary side.

If the vector group of GT is Yd1 and ST is Yyo, theoretically it is possible to select vector group of UAT as Yd11 or Yz11 as the clock position is same as conventional Dy11. Selection of star / delta / zig zag winding is based on techno-commercial reasons like type of grounding, size and cost.

3.2 Parallel Operation of Generators through GT (Synchronising)

Parallel operation of generators implicitly assumes all generators are connected to a common bus without any intervening impedance between generator and bus. But the case under discussion is about generators connected to a common bus but *through respective GTs*. Refer Fig 6. No other tapping is taken from generator terminal except for GT. In this case, *it is not necessary* to have GTs with identical clock positions.

Theoretically, GT1 can be Dy5 and GT2 can be Dz10. The reason is that transformers are not really paralleled as discussed in previous sections, but *controllable sources* are connected to one side of transformer through a process called 'synchronisation'.

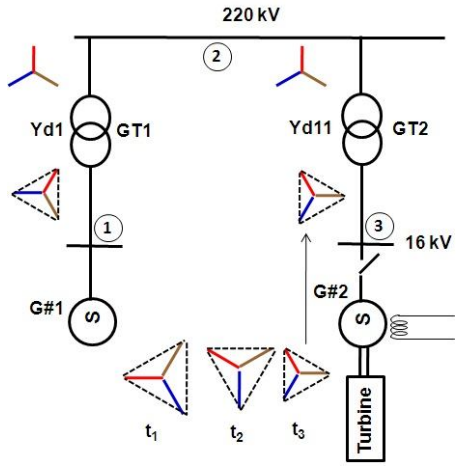

Fig. 6

Assume, Generator 1 has started, and supply is extended to Bus2 and Bus3 through GT1 and GT2. Consider, vector group of GT1 as Yd1 and that of GT2 as Yd11. Though voltages of Bus1 and Bus3 are phase shifted by 60°, it has no impact as Bus1 and Bus3 are not *directly* tied. At Bus3 any arbitrary voltage phasor can appear. At some time t_1 the generator voltage phasor is shown. Both the magnitude and phase angle of 'incoming' voltage are very different from 'running' voltage on Bus3. By adjusting power output from turbine, the machine speed can be changed to modify phase angle. By adjusting the excitation, voltage magnitude can be changed. Generator phase voltage at time t_2 is shown which is closer to 'running' voltage on Bus3. Either by manual or auto-synchroniser, the 'incoming' voltage is brought almost in line with 'running' voltage. At time t_3, the switch is closed, and the generator voltage locks onto 'running' voltage. Since controllable voltage source is connected to Bus3, there is no restriction on running voltage phasor of Bus3.

The situation is akin to docking of unmanned supply spaceship with manned International Space Station (ISS). Under remote control, supply spaceship 'chases' ISS and docks with ISS at the proper moment.

Thus, the clock position of GTs connected to a common bus can be different. Theoretically, there is no limitation on choice of primary and secondary winding connection (star, delta or zig zag).
The author is indebted to D Guha for his substantial contribution on the above topic.

4.0 AT Balance Principle in transformer

4.1 AT balance & KCL

Two fundamental principles of transformer operation are AT (Ampere-turn) balance and KCL. If both cannot be satisfied due to any constraints, no current flows in transformer. In Fig 7, Delta-Star transformer is shown.

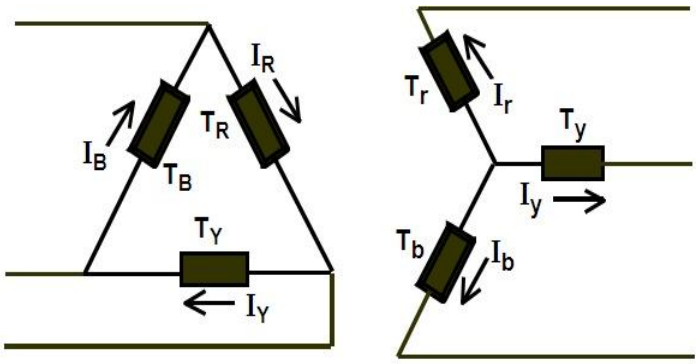

Fig. 7

Primary and secondary windings in identical alignment are wound on the same limb of transformer (Fig 8).

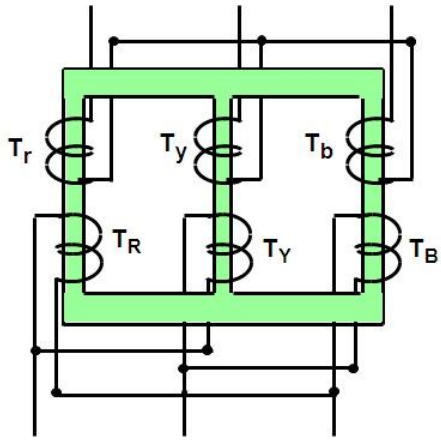

Fig. 8

For successful transformation following shall be satisfied:

Primary Winding Current x Primary Turns = Secondary Winding Current x Secondary Turns

$I_R T_R = I_r T_r$; $I_Y T_Y = I_y T_y$; $I_B T_B = I_b T_b$

4.2 Experimental verification

The above can be verified by a simple experiment which can be done in any college laboratory. Experiments were carried out on 11/0.433 kV, 400KVA transformer. Results are shown in Fig 9 to Fig 14 and Table 1. In all cases, transformer is energized from 11kV side using 240V single phase supply and LV side is shorted through shorting link.

HV side (11kV)				LV side (0.433kV)			
Fig No	Voltage across	Measured Volts (1ϕ)	Measured Current (A)	Shorting Link	I_{rn} (A)	I_{yn} (A)	I_{bn} (A)
9	RY	231	4.8	bn	-	-	215
10	YB	231	4.8	yn	-	215	-
11	BR	231	4.8	rn	215	-	-
12	RY	231	-	yn	-	-	-
13	RY	231	-	ry	-	-	-
14	RY	231	-	yb	-	-	-

Table 1

In Fig 9, voltage is applied across RY and bn is shorted on LV side. Current through secondary windings which are open is zero and corresponding primary windings also will not carry any current to satisfy AT balance principle. The measured secondary and primary currents are 215A and 4.8A. The current ratio is 45 (215/4.8) which matches with Turns Ratio (11/{0.433/√3}).

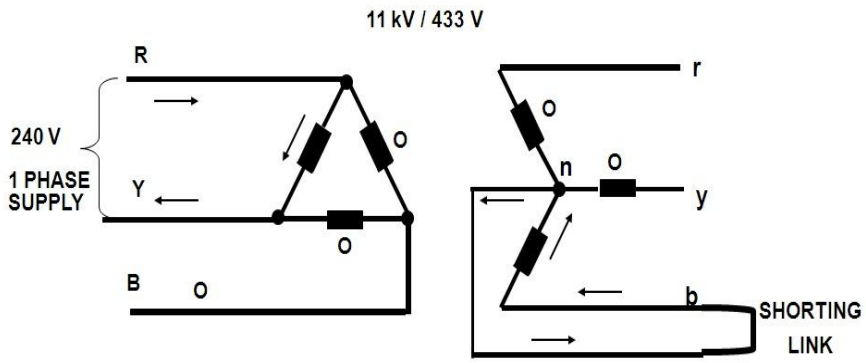

Fig 9

In Fig 10, voltage is applied across YB and yn is shorted on LV side voltage. In Fig 11, voltage is applied across BR and rn is shorted on LV side voltage. The measured secondary and primary currents are 215A and 4.8A, same as in Fig 9.

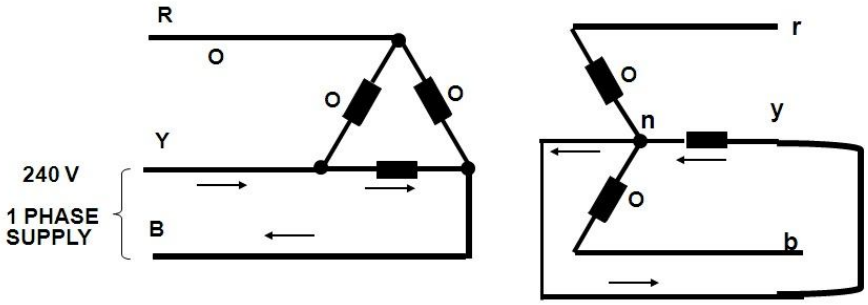

Fig 10

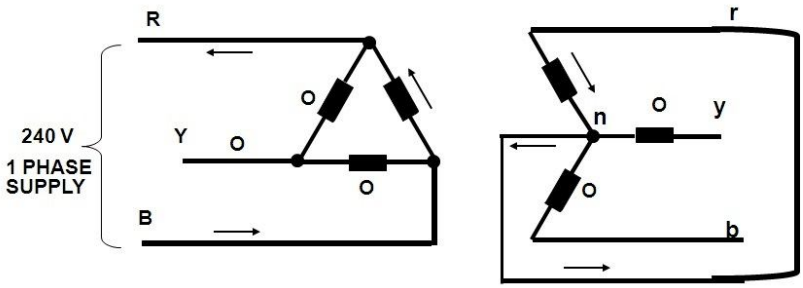

Fig 11

In Fig 12, voltage is applied across RY and yn is shorted on LV side. Since secondary windings r and b are open, the currents in corresponding primary windings are forced to zero. The only possible current distribution is shown in Fig 12, but this cannot happen as B phase on primary side is open and there is no return path for current. Current does not flow either on primary or secondary windings as confirmed from Table 1.

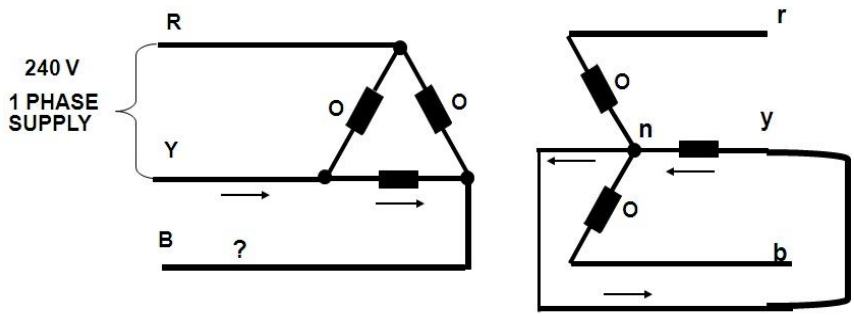

Fig 12

In Fig 13, the possible current distribution is shown when voltage is applied across RY and ry is shorted on LV side (phase to phase short). But this cannot happen as B phase on primary side is open and there is no return path for current. Current does not flow either on primary or secondary windings as seen from Table 1.

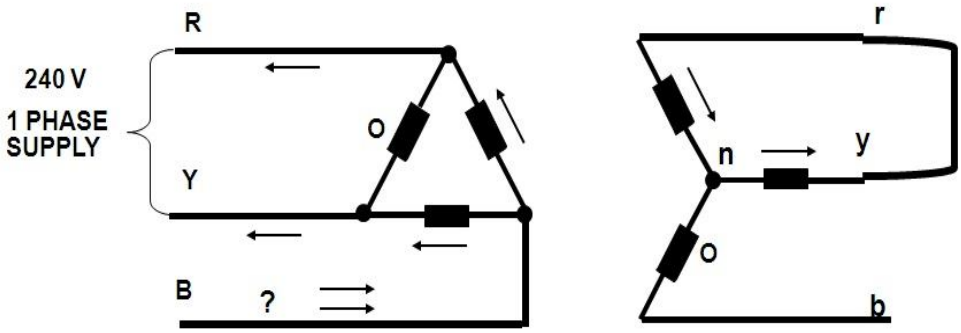

Fig 13

In Fig 14, phase to phase short circuit between y and b phase is created. In this case also, B phase on primary side is open and there is no return path for current. Absence of current flow on both secondary and primary windings is confirmed from results of experiments given in Table 1.

Avinash Gawde performed the above experiments and his contribution is acknowledged.

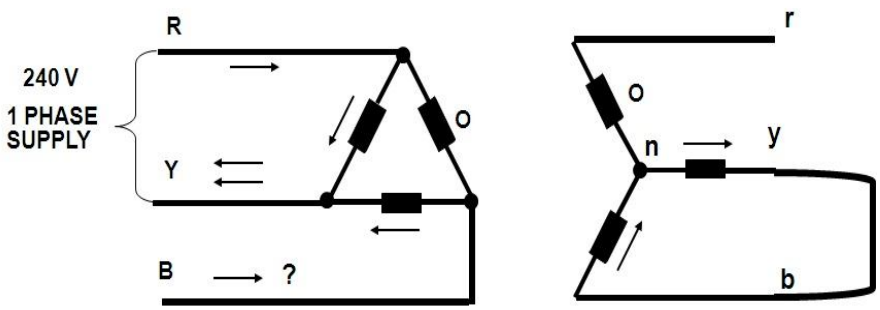

Fig 14

Analysis of current distribution in Zig Zag connected transformers reveals interesting results as windings on the same limb of transformer carry current from two different phases. For more details, refer [1].

4.3 Constant Flux Operation

An important consequence of AT balance is that it results in constant flux apparatus. A single phase transformer is considered for illustration. Let

Primary Turns T_P = 100

Secondary turns T_S = 10.

No load primary current = 1A

Full load secondary current = 990A

Corresponding full load primary current = 100A

Under no load condition, net flux in the core (Fig 9) corresponds to 100AT (1 x 100).

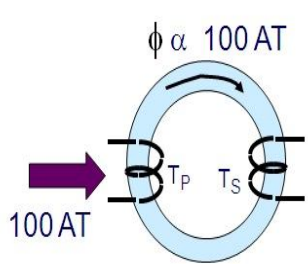

Fig 15

Under full load condition, Primary AT (100 x 100) is almost nullified by secondary AT (990 x 10) so that net flux (ϕ) in the core again corresponds to 100AT (Fig 16). The flux in the core almost remains same from no load to full load operation. For chosen flux density B (say 1.7T), the cross section of core can be fixed (ϕ / B).

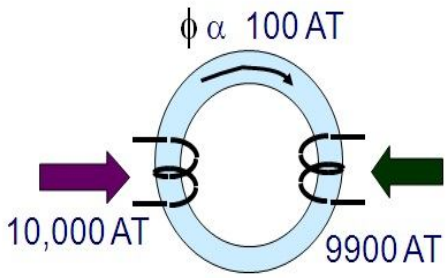

Fig 16

4.4 **Return Fault Current Distribution**

Thus, flow of current in transformer happens only when both principles (AT balance and KCL) are satisfied. In Fig 17, fault occurs at 'F'. Fault current cannot return to neutral of any arbitrary transformer (e.g. A, B or D) but will return to C which alone satisfies both the principles stated above. In fact, concepts in neutral grounding are basically based on above two principles.

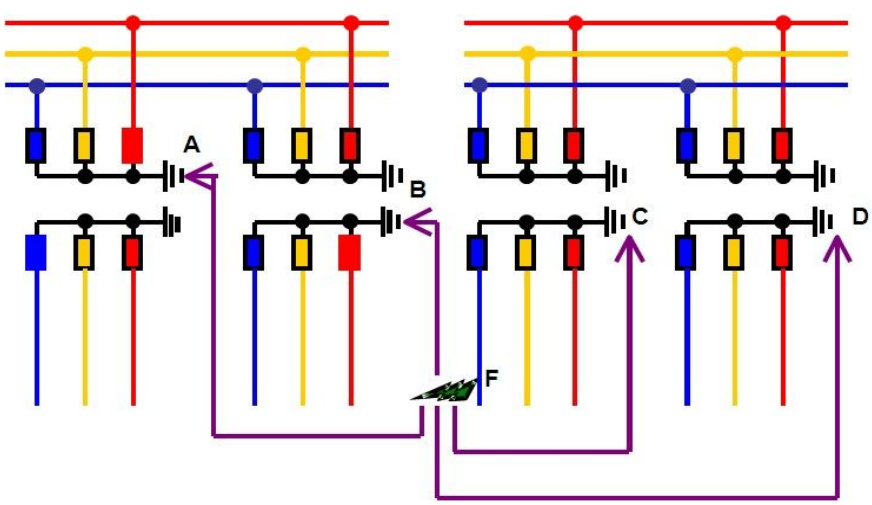

Fig 17

4.5 Spatial AT balance

It is not enough to have AT balance for the winding 'as a whole'. AT balance shall also be achieved 'spatially', i.e. at every $\Delta\ell$ height of winding Primary and Secondary AT shall be balanced. Refer Fig 18. Otherwise when the transformer feeds external short circuit current carried by both Primary and secondary windings, the dynamic short circuit forces at the place where spatial AT balance is not obtained, may lead to winding deformation if supporting and clamping structures are not adequately designed.

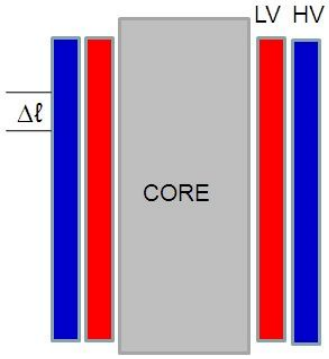

Fig 18

4.5.1 Distribution Transformers

But maintaining perfect spatial AT balance over the entire height for different main windings and tap winding dispositions is not practical in many cases. For example, consider the ubiquitous Distribution Transformers (DTs). Vector group of most of the DTs (11kV/433V or 6.6kV/433V) are Delta – Star with off load taps on HV side. Off circuit taps are provided in the middle of main winding itself (Fig 19). Perfect AT balance between HV and LV windings may not be obtained in the tap region. The designer calculates resulting short circuit forces when the transformer feeds external short circuit current and provides the necessary support and clamping structures to minimize winding deformation.

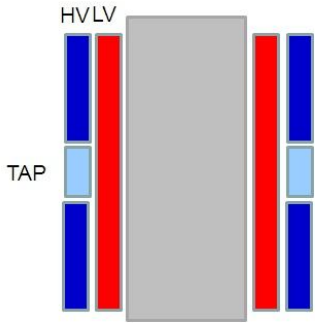

Fig 19

In passing, it may be remarked that foil wound transformers for LV winding of DTs have superior short circuit withstand capability compared to conventional wire or strip wound transformers. Foil width covers almost entire height of winding. AT unbalance created by taps on HV side etc is automatically compensated by an appropriate internal current distribution in LV foil winding. This reduces axial forces due to short circuit current flow to a negligible value. Elaborate coil clamping arrangement is not necessary [2]. Aluminium foil wound Transformers are deployed in greater numbers by utilities at distribution level. The number of faults in LT distribution system is very high and foil wound transformers have excellent through fault short circuit withstand strength.

In the case of conventional EHV transformers with OLTC on HV side, tap winding is mostly a separate one (outermost from core) and occupies shorter height corresponding to HV and LV windings. In this case also spatial AT balance over the entire height of winding is reasonably achieved.

4.5.2 **Split winding Transformers**

It is pertinent to make a remark on winding dispositions in a three winding transformer here. For illustration, 400/11.5/11.5kV transformer is considered. The HV side is made of two windings connected electrically in parallel and physically placed one above the other (Referred as Top Winding (TW) and Bottom Winding (BW) in Fig 20). The two secondaries LV1 and LV2 are linked to Top and Bottom windings of HV respectively. This arrangement, called 'split winding', is much cheaper compared to having separate two double winding transformers. But this economy comes with a drawback. When both LV1 and LV2 carry normal current, AT balance is maintained spatially. However, if LV2 feeds a through fault, though BW carries majority of reflected fault current, not so insignificant current (about 5% of reflected current) flows also in TW due to coupling between TW and LV2. There is no counter balancing current in LV1. This creates spatial AT unbalance. The situation is accentuated if taps are present on HV side. The outer tapping winding cannot be of full height since the line lead coming out from mid-height of the HV must be cleared by the tap winding. This also creates spatial AT unbalance. The design of support and clamping structures to withstand short circuit forces is a challenging task.

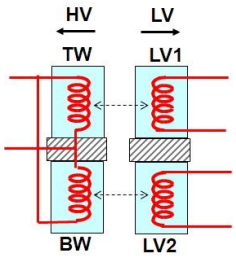

Fig 20

4.5.3 **Inrush Current**

When a transformer is switched on, inrush current (up to 6 to 8 times rated current) flows. The magnitude of inrush current depends on what point of voltage waveform the transformer is switched on and polarity and magnitude of residual magnetism present before switching. If transformer is switched from HV side, Inrush current flows only in HV winding whilst the LV windings do not carry any current. Thus, AT unbalance occurs every time the transformer is switched in. The winding that carries the inrush current is subject to mechanical stresses. Transformers subjected to repeated switching (from same side HV or LV) can suffer winding deformation if they are not designed to withstand the forces with sufficient safety margin.

In very large power transformers, the situation is mitigated to a large extent by using CSD (Controlled Switching Device) in which each pole of breaker is closed at the most favourable instant on voltage waveform that will cause least inrush current. For obvious reasons CSD is not applicable for gang operated breakers. An example of inrush current waveform, captured from numerical relay records, is shown in Fig 21. The auto-transformer is rated for 765/400/33 kV, 1000 MVA (3x333), and is switched from 765kV side using CSD. The maximum inrush current observed is only 11% of rated current, substantially lower than 200% to 800% expected when switching without CSD. The winding does not practically experience any dynamic forces.

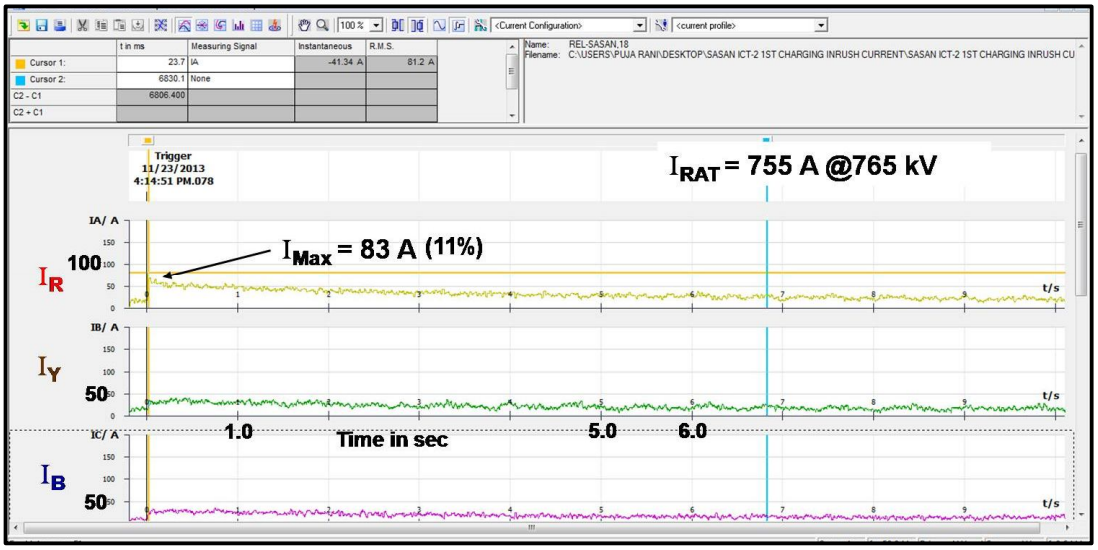

Fig 21

4.5.4 **Design Approach**

The designer must ensure that the transformer withstands resulting dynamic forces in all above cases and this involves:

(a) Precise calculation of the magnetic flux distribution in the windings

(b) Proper design of support structure

(c) Judicial choice of materials (work hardened and/or epoxy bonded conductors, well stabilized insulating materials, high strength structural steel etc)

(d) Correct processing and clamping of the transformer winding system.

Sophisticated software tools (e.g. SMC ELDINST from Ukraine, COMSOL from Sweden) to calculate flux distribution and dynamic forces are available to aid the designer to achieve the above. For more in-depth analysis on this subject, Chapter 6 of Ref [3] can be consulted.

The author acknowledges the clarifications provided by Vikrant Joshi and P Ramachandran on various aspects of spatial AT unbalance.

5.0 **Impedance specification for 3 Single phase transformers vs Three phase transformer**

For a 600MW unit, typical parameters of Generator Transformer are as follows: 750MVA, 20kV/420kV, YNd1, X_T = 15% impedance at principal tap. Generator Transformers of large units (600MW and above) are generally made up of 3 single phase units due to transport limitations. Delta on LV side and Star on HV side are formed externally. Refer Fig 22.

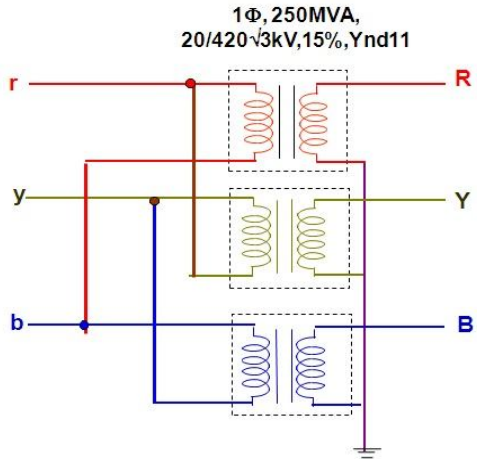

Fig. 22

MVA and voltage rating of single phase transformer are specified, without ambiguity, as 250MVA and 20kV/420/√3kV. However, a lingering doubt arises in the mind of young design engineer when specifying impedance for single phase unit (5%, 15% or 45%?). The real advantage of working in per unit system is that the same percentage impedance required for three phase unit can be specified for single phase unit. This will be clarified with a numerical example.

Single Phase unit: 250MVA, 20kV/(420/√3)kV and X_T = 15%.

Rated Current I_R = 250/20 = 12.5kA

Base Impedance $Z_B = 20^2/250 = 1.6\Omega$

Impedance $Z_T = 0.15 \times 1.6 = 0.24\Omega$

Impedance Volts $V_I = 20 \times 0.15 = 3$kV

By definition, if impedance volt is applied on LV side of transformer with HV side shorted, rated current will flow. For single phase circuit (Fig 23),

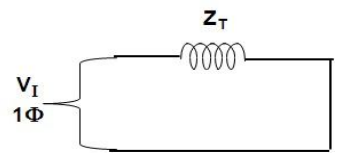

Fig.23

I = 3/0.24 = 12.5kA

This matches with rated current.

Three Phase unit: 750MVA, 20kV/420kV and X_T = 15%. (assumed same as for single phase unit)

Rated Current I_R = 750/(√3 x 20) = 21.6513kA

Base Impedance $Z_B = 20^2/750 = 0.5333\Omega$

Impedance Z_T / phase = 0.15 x 0.5333 = 0.08Ω

Impedance Volts $V_I = 20 \times 0.15 = 3$kV

By definition, if impedance volt is applied on LV side of transformer with HV side shorted, rated current will flow. For three phase circuit (Fig 24),

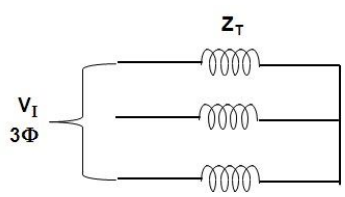

Fig.24

I = (3/√3) / 0.08 = 21.6513kA

This matches with rated current.

Thus, percentage impedance for single phase units will be same as that for equivalent three phase unit.

6.0 Voltage dip for fault on primary

Effect of upstream fault on downstream voltages

Voltage dip is defined as the difference between reference voltage (usually steady state pre-fault voltage) and residual voltage during fault expressed as percentage. For example, if the pre-fault voltage of bus is 100% and voltage of bus during fault is 55%, voltage dip is 45%. This is as per IEC definition [4].

Voltage dips on upstream side due to a fault is felt on downstream levels. Power Quality issues due to upstream voltage dips are discussed in detail in [5]. The levels to which downstream bus voltages dip depend on vector group of intervening transformers present. The results of simulation for isolated transformer are shown in Table 2 and are in line with values given in Table 1 of [4]. Following assumptions are made in simulation:

(a) Source on primary side is solidly grounded.

(b) Line to ground fault on primary side without fault impedance, i.e. voltage of faulted phase on primary side is zero.

Secondary side voltages for (L-G) fault on primary side

Vector Group	Phase Voltages			Line Voltages			Phase Unbalance
	R_N	Y_N	B_N	RY	YB	BR	
YNyn	0	1	1	0.58	1	0.58	1.0
Dyn	0.58	1	0.58	0.88	0.88	0.33	0.39
YNd	-	-	-	0.33	0.88	0.88	-
YNzn	0.58	1	0.58	0.88	0.88	0.33	0.39
Dzn	0.88	0.88	0.33	1	0.58	0.58	0.53

Table 2

Unbalance indicated in the last column of Table -2 is evaluated as follows:

Phase quantities - V_R, V_Y and V_B

Average value $V_{AVE} = (V_R + V_Y + V_B) / 3$

$V_{UNB} = \text{Max} \{ |V_{AVE} - V_R|, (|V_{AVE} - V_Y|, (|V_{AVE} - V_B| \} / V_{AVE}$

In all cases, unbalance is 1pu (100%) on primary side as one of the phase voltage is zero (faulted phase). Vector groups other than Yy reduce the unbalance substantially. The steep voltage dip in one phase in primary is 'distributed' across three phases in secondary. Thus, a step down transformer achieves the following:

(a) Steps down the voltage
(b) Reduces the fault level
(c) Reduces the voltage unbalance for dip in upstream voltage.

The first two are well known but the third is significant from power quality point of view in transmission / distribution systems.

In previous discussion, only an isolated transformer is considered. In practical power systems, series of step down transformers are involved from EHV system to consumer substation. For analysis, transmission, and distribution system of author's company in Mumbai is shown in Fig 25.

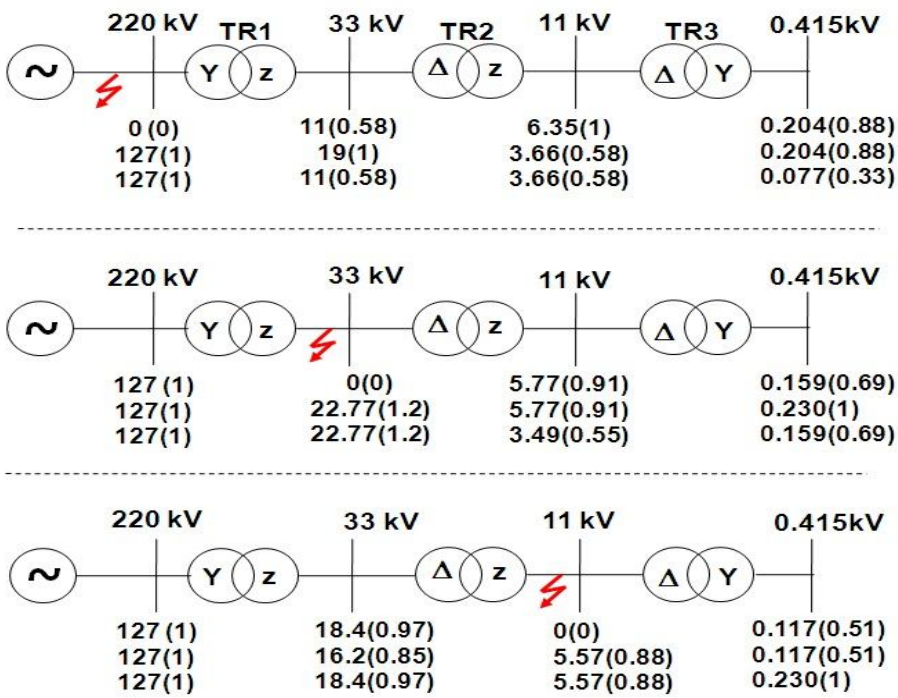

Fig. 25

Salient details (typical) are given below:

(a) 220kV system - solidly grounded

(b) TR1 - 220/33kV, 125MVA, YNzn11 transformer. 33kV system is 'effectively grounded' through NGR (Neutral Grounding Reactor) such that (I_{1P} / I_{3P}) > 0.6

(c) TR2 - 33/11kV, 25MVA, Dzn10. 11 kV system is solidly grounded.

(d) TR3 – 11/0.415kV, 1MVA, Dyn1. LV system is solidly grounded.

(L-G) fault is simulated on 220kV, 33kV and 11kV systems and the results are shown in Fig 25. The three phase voltages shown are in kV. Values in pu are shown within brackets. Following observations are made:

(a) LV (415V) side can experience voltage dip from 31% to as high as 67%.

(b) 11kV side can experience voltage dip for upstream faults to the extent of 45%.

The above results are based on extreme case of fault with zero impedance on upstream side. If fault impedance is present, dips will be correspondingly less.

Faults in utility system occur due to atmospheric conditions, equipment failure or external intrusion damaging the equipment. In these cases, voltage dip at consumer end can't be avoided. The consumer must design his equipment which are sensitive to voltage dips to have 'ride through capability' to override upstream transient faults. Typical over ride time of at least 300 msec is recommended before which upstream fault is expected to be cleared [5]. Another method to prevent loss of drive during transient dips is to employ 'Reacceleration schemes'.

Contributions of Sonu Karekar and Amol Salunkhe in doing the simulation using PSCAD and PSSE are acknowledged.

7.0 Current Unbalance reduction in Delta - Star transformer

In Cl 6 and Table 2, we discussed how a steep dip in upstream voltage of a phase is more evenly distributed in downstream buses due to presence of Delta – Star transformer resulting in reduction in 'voltage unbalance'. Here we will demonstrate how current unbalance in downstream side is mitigated on upstream side of Delta –Star transformer.

Consider 11/0.44kV, Distribution Transformer (DT). Vector group of DTs used in utilities and power plant / industrial plant auxiliary systems is almost universally Delta – Star. On the LV side (Star), single phase loads are present. Perfect balancing of loads in three phases is difficult to achieve especially in utility distribution systems. Sample spot readings taken on DTs in author's utility are given in Table 3

KVA	I_R (A)	I_Y (A)	I_B (A)	Unbalance (%)
1000	1440	1580	1380	7.7
1000	1270	1611	1231	17.5
630	1005	875	970	7.9
630	963	724	965	18.1

Table 3

Unbalance indicated in the last column of Table 3 is evaluated as follows:

Phase quantities - I_R, I_Y and I_B

Average value $I_{AVE} = (I_R + I_Y + I_B) / 3$

$I_{UNB} = \text{Max} \{ |I_{AVE} - I_R|, (|I_{AVE} - I_Y|, (|I_{AVE} - I_B| \} / I_{AVE}$

For illustrating the unbalance mitigation offered by Delta – Star vector group, let the current on secondary (star) side (in pu) be as follows:

$I_R^S = 1\angle 0$; $I_Y^S = 0.9\angle\text{-}140°$; ; $I_B^S = 1.1\angle 100°$

Average value $I_{AVE}^S = (1+0.9+1.1) / 3 = 1.0$

$I_{UNB}^S = 10\%$

Using sequence components, zero, positive and negative sequence components are evaluated as follows:

$I_0^S = [I_R^S + I_Y^S + I_B^S] / 3$

$= [1\angle 0 + 0.9\angle\text{-}140° + 1.1\angle 100°] / 3 = 0.1729\angle 76.7°$

$I_1^S = [I_R^S + a\, I_Y^S + a^2\, I_B^S] / 3 = 0.9865\angle\text{-}13.4°$

$I_2^S = [I_R^S + a^2\, I_Y^S + a\, I_B^S] / 3 = 0.0597\angle 89.6°$

Following Stevenson Convention [6] for sequence component transformation across Delta – Star transformer,

$I_1^P = j\, I_1^S$

$= 0.9865\angle 76.6°$

$I_2^P = -\, j\, I_2^S$

$= 0.0597\angle -0.4°$

$I_0^P = 0$

Current on primary side are worked out as follows:

$I_R^P = I_0^P + I_1^P + I_2^P = 1.0016\angle 73.3°$

$I_Y^P = I_0^P + a^2\, I_1^P + a\, I_2^P = 0.9295\angle -42.3°$

$I_B^P = I_0^P + a\, I_1^P + a^2\, I_2^P = 1.031\angle -161.1°$

Average value $I_{AVE}^P = (1.0016 + 0.9295 + 1.031) / 3 = 0.9874$

$I_{UNB}^P = 5.9\%$

Almost 40% reduction in current unbalance (10% to 5.9%) is obtained on delta side primarily because the zero sequence component is trapped within delta. Refer Fig 26 for current distribution.

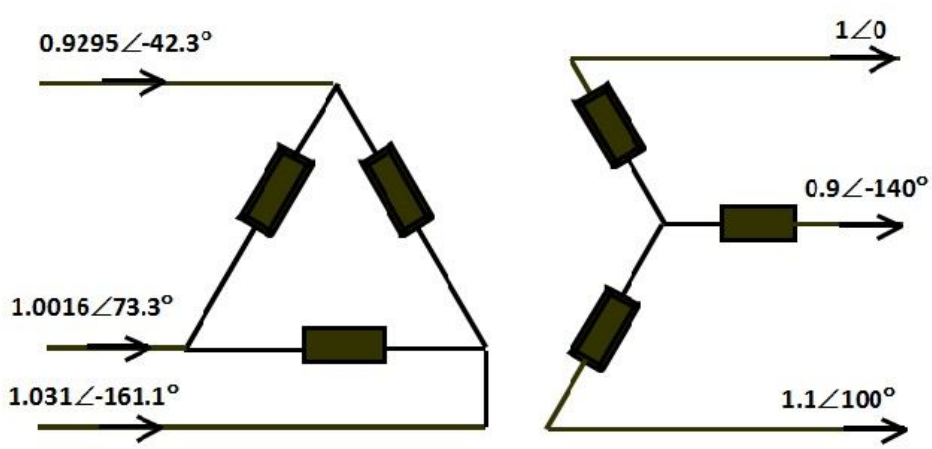

Fig 26

We can now summarize the main reasons for choosing vector group of Distribution Transformers as Delta – Star are as follows:

(a) Zero sequence isolation between primary and secondary is obtained. Ground fault on LV side will be reflected only as phase to phase fault on HV side. Refer Cl 5.4.1 of [7]. Ground fault relays even with sensitive setting on H V side will not operate inadvertently for faults on LV side. This is very essential as faults on LV side in distribution system are large.

(b) Steep voltage dip on one phase of HV side is more evenly distributed among phases on LV side. For example, for line to ground fault on HV side, voltage unbalance on HV side is 100% and corresponding unbalance on LV side is 39%. Voltage dip experienced at consumer end for upstream faults is less severe.

(c) In distribution system, ideal phase balancing is not possible. The unbalance in current on LV side is reduced on reflected current on HV side due to presence of delta winding.

8.0 Conclusions

In this article, we have concentrated on transformer and its influence on power system under normal and fault conditions. The major observations are as follows:

(a) Phase shift introduced by (Y-Δ) transformer cannot influence power transfer magnitude**.** Otherwise just three intermediate (Y-Δ) transformers can introduce in sum 90° shift, thus reaching stability limit which is untrue.

(b) Subtle difference between paralleling and synchronizing is explained. Critical remarks are made on vector group selection.

(c) Fundamental concepts of AT balance of transformer have been explained supported by experimental results. Significance of spatial AT unbalance is discussed in detail especially with respect to withstand capability of transformer against dynamic forces.

(d) Confusion regarding specifying percentage impedance of 3 phase transformer and equivalent 3 x1 phase transformer has been clarified.

(e) The transformer acts like a ‘smoothing’ element against steep voltage dips on primary side and unbalance currents on secondary side.

9.0 Reference

[1] "Zig Zag Transformer – Fault Current Distribution, Short Circuit testing and Single Phase Loading", K Rajamani and Bina Mitra, IEEEMA Journal, July 2013, pp 84 - 91.

[2] "Construction of Distribution Transformer – winding", Crompton Greaves Brouchure

[3] "Transformer Engineering – design and Practice", S V Kulkarni and S A Khaparde, Marcel Dekker, 2004

[4] "Environment – Voltage dips and short interruptions on public electric power supply systems with statistical measurement results", IEC 61000-2-8, 2002

[5] "Power Quality Overview – Practical aspects", K Rajamani, IEEEMA Journal, May 2016, pp 73-78.

[6] "Elements of Power Systems Analysis ", Stevenson, W.D., McGraw Hill, New York, 1982.

[7] "Conceptual clarifications in Electrical Power Engineering – Part 1", K Rajamani, IEEEMA Journal, Aug 2016, pp 69 - 80.

ieema journal

Conceptual Clarifications in Electrical Power Engineering Part-3

Dr K Rajamani,

Reliance Infrastructure Ltd., MUMBAI

(June 2017, IEEMA Journal, Page 80 to 92)

Conceptual Clarifications in Electrical Power Engineering – Part 3

K Rajamani, Reliance infrastructure Ltd

"*Simplicity is an exact medium between too little and too much. " —*

Joshua Reynold, Discourses on Art

1.0 Introduction

In Part 2, some aspects of transformer operation were clarified. The present article is focused on induction motor. The practicing engineer is faced with curse of 'information over-load' on this topic with conflicting suggestions in some cases. The aim of this article is cut through the plethora of information and offer easy to understand resolution of problems faced by design and field engineers. Wherever required, actual field measurements are presented to support the theory.

The topics covered in this article are:

(a) Voltage dip during HT and LT motor starting
(b) Locked rotor protection
(c) High impedance differential protection
(d) Application of surge arrestor for VCB switched motor
(e) Service Factor
(f) Special protection for wound rotor motor

2.0 Voltage Dip During HT Motor Starting

For estimating the voltage dip during HT motor starting, simple hand calculations as illustrated below will suffice in most of the cases. Only in case the voltage dips by hand calculation exceeds 15%, detailed motor starting studies using software are warranted. Hand calculations give feel for results which can be cross checked using software in critical cases if required.

2.1 Approximate evaluation of voltage dip during motor starting

Refer Fig 1.

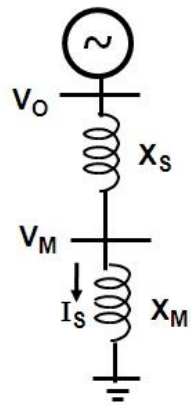

Fig. 1

Expressing on common Base MVA

$$System\ Impedance\ X_S = \frac{Base\ MVA}{Fault\ Level}$$

$$Motor\ Starting\ impedance\ X_M = \frac{Base\ MVA}{Starting\ MVA}$$

$$I_S = \frac{V_O}{X_S + X_M}$$

$$V_M = I_S X_M = \frac{V_O}{X_S + X_M} X_M$$

$$= V_O \frac{1}{1 + \frac{X_S}{X_M}}$$

$$= V_O \frac{1}{1 + C}$$

$$C = \frac{X_S}{X_M} = \frac{Starting\ MVA}{Fault\ Level}$$

2.1.1 Case Studies

Case 1:

UAT (Unit Auxiliary Transformer): 25MVA, 20 / 6.6 kV, 10.57%

BFP Motor: 5.6MW, 6.6kV

Full Load Efficiency η = 0.968

Full Load PF = 0.85

Starting current = 450%

$$Fault\ level = \frac{25}{0.1057} = 236.5184\ MVA$$

$$Motor\ Input\ rating = \frac{5.6}{0.968\ x\ 0.85} = 6.806\ MVA$$

Starting MVA = 4.5 x 6.806 = 30.6271 MVA

$$V^{+} = V^{O}\ \frac{1}{1 + C}$$

V^{+} = Bus Voltage after motor switching

V^{O} = Bus voltage before motor is switched.

C = Factor

$$C = \frac{Starting\ MVA}{Fault\ level}$$

$$= \frac{30.6271}{236.5184} = 0.1295$$

Assuming V^{O} = 1.0pu

$$V^{+} = 1.0\ \frac{1}{1 + 0.1295} = 0.8853\ pu$$

The estimated dip is 11.5%

HT motors are designed to start with 80% voltage. Since estimated dip is much lower than allowable dip of 20%, further studies using software are not required.

Case 2:

UAT: 50MVA, 21 / 11 KV, 10%

BFP Motor: 17MW, 11KV

η = 0.95

PF = 0.9

Starting current = 550%

$$Motor\ Input\ rating = \frac{17}{0.95\ x\ 0.9} = 19.9MVA$$

Starting MVA = 5.5 x 19.9

= 109MVA

$$Fault\ level = \frac{50}{0.1} = 500MVA$$

$$C = \frac{Starting\ MVA}{Fault\ level}$$

$$= \frac{109}{500} = 0.22$$

Assuming, pre-switching voltage as 100%

$$V^{+} = 1.0\frac{1}{1 + 0.22} = 0.82$$

The estimated dip is 18% which is close to permissible limit of 20%. In this case, verification using software is desirable to confirm adequacy of system design.

2.2 Remarks on starting current and bus voltage dip

Current, bus voltage and speed during motor acceleration obtained using simulation are shown in Fig 2. Stator transients are ignored in the simulation. It must be emphasised that starting current (550%) remains at the high value and sharply falls down to normal value (below100%) *only after the motor speed has attained 90% speed*. Consequently, the bus voltage also dips during the *entire starting period*. If the starting current gradually decreases from high value to low value as the motor accelerates, as depicted in dashed curve, bus voltage also would have recovered quickly as the motor picks up speed.

But this *does not happen* as starting current characteristics does not follow the dashed line resulting in prolonged voltage dip.

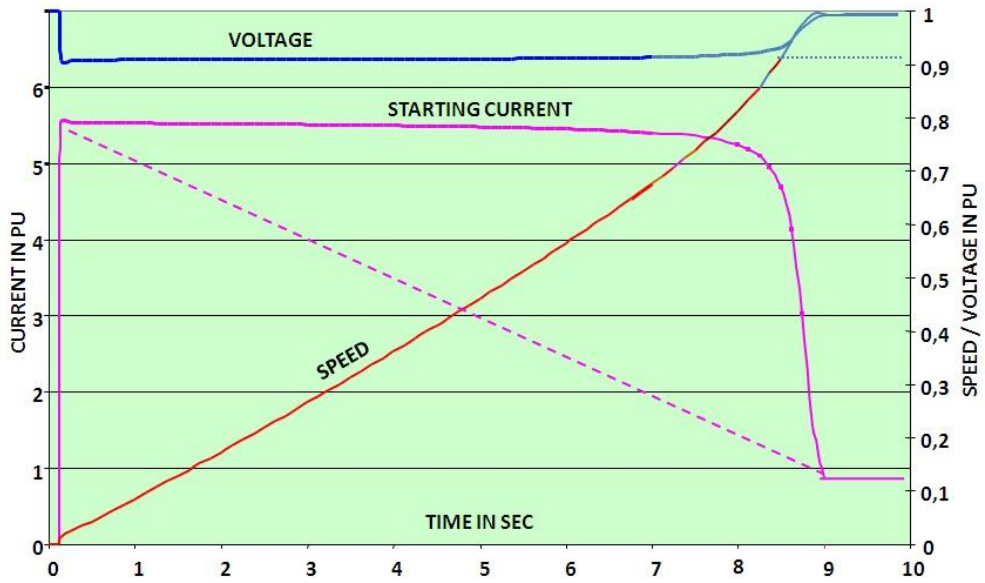

Fig. 2

2.3 Site measurements of voltage dip during motor starting

Starting current and bus voltage wave forms were captured at site during starting of largest motor (BFP) in power plants. Motor details are shown in Table 1 and captured waveforms are shown in Fig 3 to 5. Voltage and current in Fig 3 are instantaneous values whilst in Fig 4 & Fig 5 are RMS values. In Fig 4 records up to 1.6 seconds registered in the relay are only shown though the actual starting time is 7 seconds. The transients in starting current last for about 200 msec after switching. All the records clearly show that the voltage dip exists during the *entire starting period*. The author is indebted to Mahesh Bhadoria, Gouni Reddy, Alok Uppal and Kini Venkatesh for sharing BFP starting characteristics recorded at different sites.

Unit Size MW	Motor Data			Voltage Dip (%)	Starting time (Sec)	Fig No.
	V_{RAT} (kV)	P_{RAT} (MW)	I_{RAT} (A)			
250	6.6	9	922	17	4.9	Fig 3
660	11	17	1005	18	7.0	Fig 4
800	11	18.1	1088	17	8.5	Fig 5

Table 1

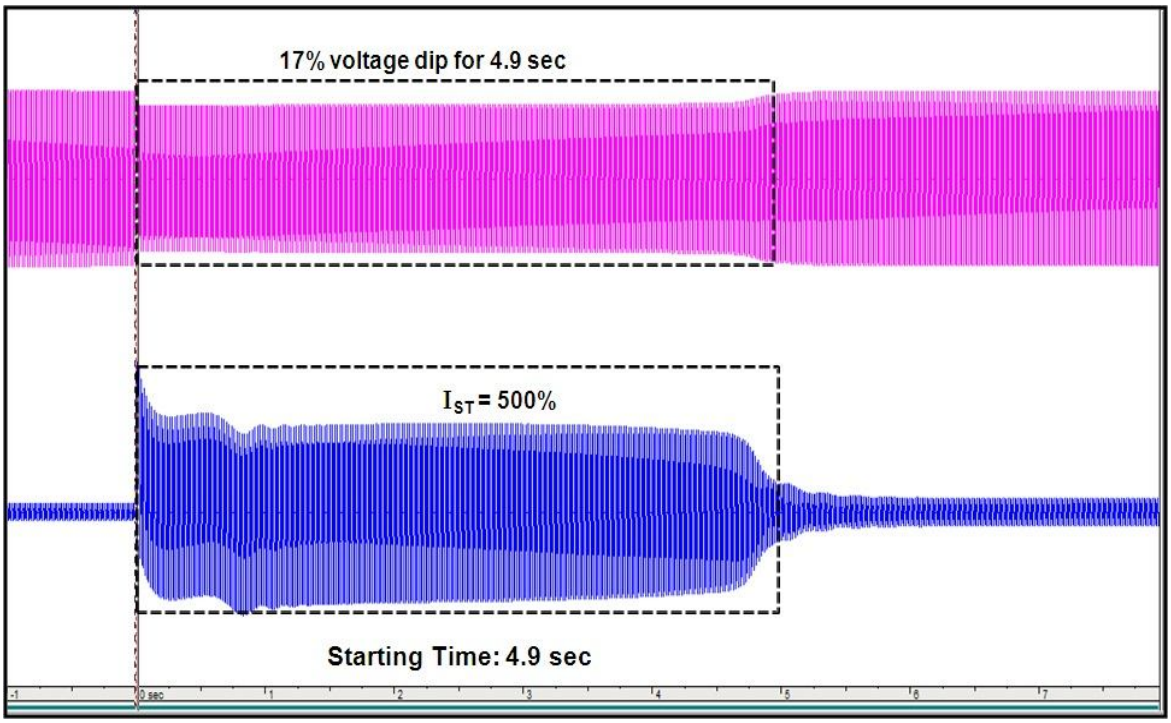
17% voltage dip for 4.9 sec
I_{ST} = 500%
Starting Time: 4.9 sec

Fig. 3

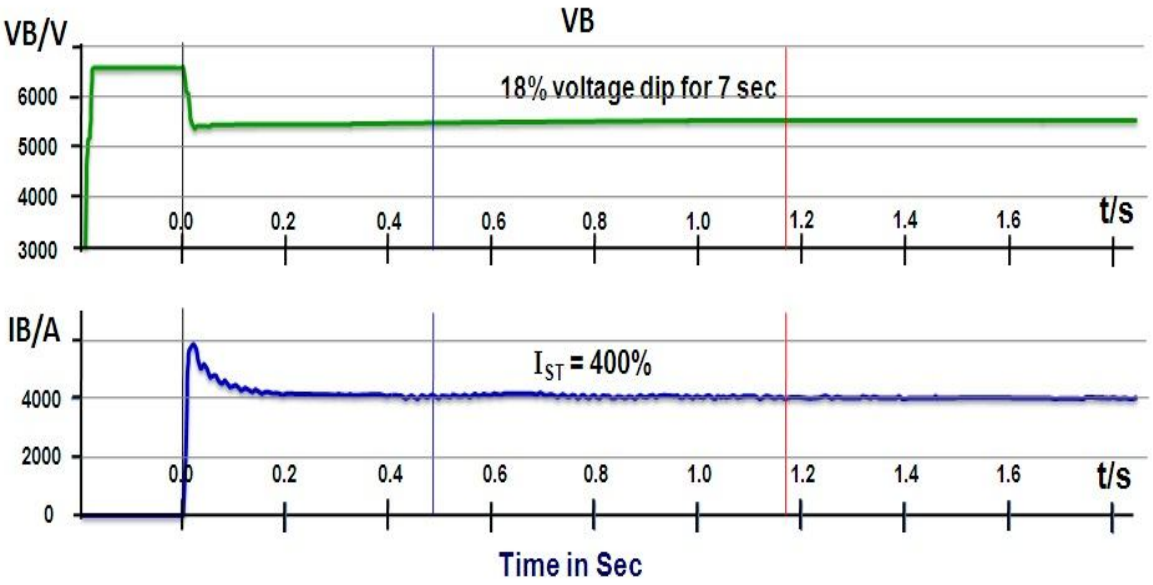
VB
VB/V
6000
5000
4000
3000
18% voltage dip for 7 sec
0.0
0.2
0.4
0.6
0.8
1.0
1.2
1.4
1.6
t/s
IB/A
4000
2000
0
I_{ST} = 400%
Time in Sec

Fig. 4

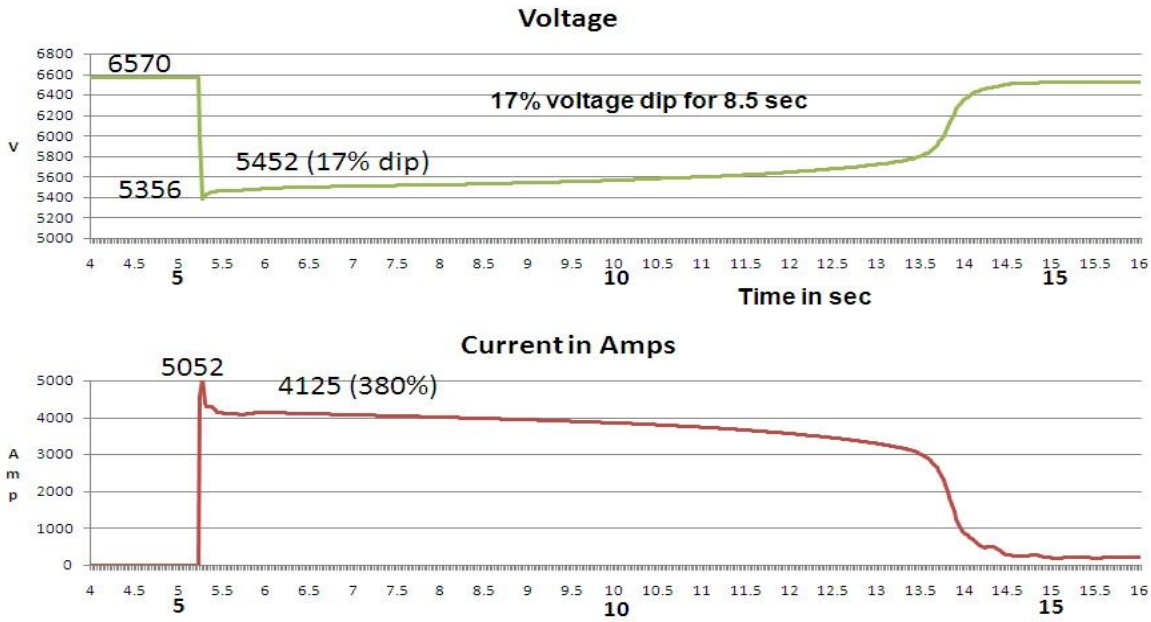

Fig. 5

2.4 Software Simulation.

In the software (NEPLAN, ETAP, PSSE, etc), complete auxiliary system including generators, transformers, motors already running on the bus and motor to be started, cable between the bus and motor, etc. are represented. When starting current is given as 500% in motor data sheet, it is on the assumption that motor is started on 'infinite bus'. This implies that terminal voltage of bus is unaffected by motor starting MVA (mostly reactive) and starting current of 500% is maintained throughout the starting period. In practice, the fault level of bus is finite (500 MVA in case 2 of Cl 2.1.1). Immediately after switching in motor, if bus voltage dips to 82%, the starting current reduces almost proportionately, i.e. 5 x 0.82 = 4.1pu. This will result in slight recovery of bus voltage. Simultaneously, those motors which are already running on the bus will try to draw increased current at reduced voltage to maintain same power. This will try to depress the voltage. All these effects are captured in software which has motor starting dynamics module. But as stated previously, it is recommended to do 'order of magnitude' calculations by hand and proceed for software simulation only in critical cases. Only if dip by hand calculation exceeds a critical value detailed simulation using software is warranted. Doing motor starting dynamics simulation using software for trivial cases (like starting 2MW motor on 25MVA transformer) gives a 'perceived sense of accuracy' but does not have much practical value addition.

3.0 Voltage Drop during LT Motor Starting

Previous section dealt with voltage dip during starting of big MV motors. Voltage dip during starting of large LV (415V) motors connected by long cable is covered in this section. If voltage dip during starting is excessive, two options are available to reduce the dip: increase the cable size or increase the number of runs. With an example, we will illustrate why later option is preferred.

3.1 Analytical expression for voltage drop

Consider an LT motor fed from MCC. Refer Fig 6.

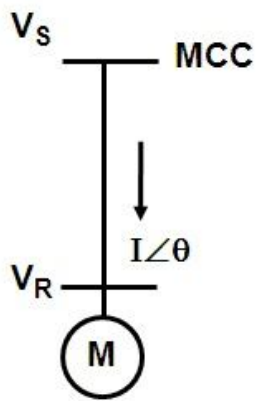

Fig 6

The phasor diagram is shown in Fig 7.

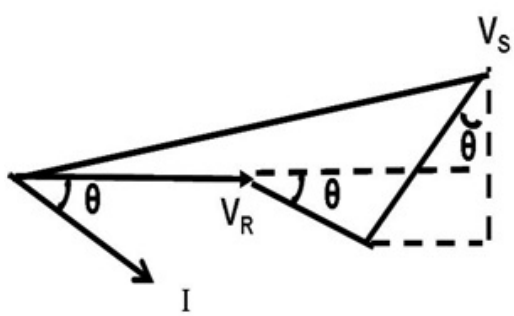

Fig 7

Sending end voltage (MCC) - V_S

Receiving end motor terminal voltage - V_R

Cable impedance - R + jX

Current - $I \angle -\theta$

$$V_S^2 = (V_R + IR\cos\theta + IX\sin\theta)^2 + (IX\cos\theta - IR\sin\theta)^2 \quad \ldots (1)$$

After simplification,

$$V_R^2 + I^2 (R^2 + X^2) + 2V_R I (R\cos\theta + X\sin\theta) - V_S^2 = 0 \quad \ldots (2)$$

Solving for V_R in the above quadratic equation,

$$V_R = - I (R\cos\theta + X\sin\theta) + \sqrt{V_S^2 - I^2(R\sin\theta - X\cos\theta)^2} \quad \ldots (3)$$

3.2 Case Studies

The system parameters for the example are given below:

MCC bus voltage: Line Voltage 415V; Phase Voltage V_S = 240V

Running load current of motor I_{RUN} = 166A at 0.85 pf

Starting current of motor I_{STA} = 1000A at 0.2 pf

Cable length – 250M from MCC to motor

Case 1: Size of cable connecting MCC to motor – 1 x 3C x 120mm^2 Al

The cable parameters are: R = 0.323Ω/KM; X = 0.0712Ω/KM

The motor terminal voltage for running and starting conditions, evaluated using Eqn (3), is given in Table 2. The terminal voltage during starting is 80.9%, almost 19% dip in voltage.

Case 2: To improve the motor terminal voltage during starting conditions, let the cable size be doubled.

Cable Size – 1 x 3C x 240mm^2 Al

The cable parameters are: R = 0.161Ω/KM; X = 0.0710Ω/KM

The terminal voltage during starting is 88.3%, though better than Case 1, the improvement is not substantial.

Case 3: Instead of doubling the size, consider two runs of cable.

Cable Size – 2 x 3C x 120mm^2 Al

The terminal voltage during starting is 96.2%, much higher than in Case 2. The resulting dip is only 4%.

Case No	Cable size	Voltage at Motor end (%)		
		Starting	Running	Voltage drop
Case 1	1 x 3C x 120	80.9	94.6	$I\,(R + jX)$
Case 2	1 x 3C x 240	88.3	97.0	$I\,(\frac{R}{2} + jX)$
Case 3	2 x 3C x 120	96.2	98.6	$\frac{I}{2}(R + jX)$

Table 2

The value of R reduces almost linearly with increase in size. When size (A) is doubled, R decreases by half ($R = \rho\ell/A$). However, *X* almost remains the same for wide range in size from 25mm^2 to 500mm^2. *Hence IX drop is nearly same irrespective of cable size*. Moreover IX drop adds almost algebraically with voltage in case current drawn is at poor power factor like during motor starting condition. Refer Fig 8 of [1].

In case of multi-run cables, IX drop decreases linearly as per number of runs resulting in significant improvement in voltage profile.

Summarizing, if voltage drop is excessive during motor starting conditions, increase the number of runs rather than the cable size.

4.0 Locked rotor condition

This is also referred as stalling condition. Motor stalls during running or unable to accelerate because of excessive load, under voltage, single phasing, mechanical jamming, etc. When the motor stalls, the stalling current or locked rotor current is almost equal to starting current. Even though current during starting and stalling are almost same, there is a subtle difference between the two conditions from thermal stress point of view. In case of starting, once the motor has picked up speed, cooling fan is on whilst under stalled condition there is no cooling as summarized in Table 3.

Description	Starting	Stalling (Locked Rotor)
Current	$6I_N$	$6I_N$
Motor Cooling Fan	Yes	No

Table 3

During starting, temperature rise is about 3°C per second as heat loss is proportional to I^2R. i.e., 36R.If starting time is 10 sec, even with cooling fan on, the temperature rise will be nearly 30°C. Under locked rotor condition, with no cooling, temperature rise will be unacceptable if prolonged beyond a time. One of the data furnished by motor manufacturer is the 'Locked Rotor Withstand Time', also referred as 'Hot Safe Stall Withstand Time' (T_{HSST}). If actual stall time is more than T_{HSST}, the motor must be tripped to prevent thermal damage.

4.1 Pick up setting for locked rotor protection

Current magnitudes during different operating conditions are shown in Fig 2.

(a) $I \leq 1.0$pu – Normal loading condition

(b) 1.0pu < I < 1.5pu – Over load region

(c) 5.0pu < I < 6.0pu – During stalling condition; During starting condition, current practically remains in this region till the speed reaches above 0.9pu

(d) 1.5pu < I < 5pu – Only during transients. Sustained motor operation in this region is not practical. Either motor operates near normal speed or stalls.

Assume starting current is 6pu (600%). It is unwise to set the current pickup for Locked Rotor Protection close to 6pu, say 5.5pu. Also, if stalling occurs under single phasing condition, the stalling current is (√3/2) times 'normal' stalling current, i.e., 5.2 pu (6 x 0.866). In this case if pickup is set at 5.5pu, relay will not operate.

It is recommended to set current pickup as, say, 2pu (200%). Under starting or stalling condition, the relay will positively pickup as the setting is well below the starting or stalling current of 6pu.If the current is above 2pu for sustained period it is abnormal condition

4.2 Handle to distinguish stalling condition from starting

The challenge is how to distinguish between 'normal' starting condition and stalling condition, since current drawn is same order of magnitude in both cases. The situation is similar to that faced in differential protection of transformer to distinguish between transformer inrush and internal fault. In case of transformer differential protection, the handle used to distinguish between inrush and internal fault is second harmonic component of current, which is high for inrush and low for internal fault. In case of locked rotor protection for motor, one of the handles used to distinguish between starting condition and stalling condition is time.

4.3 Locked rotor protection based on current and time

For example, assume hot safe stall withstand time of motor is 20 sec and starting time of motor is 10 sec. Set the stall element time delay above starting time of motor but less than safe stall withstand time. In this example, time delay can be set at 11 sec. Every time motor starts, the current element set at 2pu will pick up as starting current is 6pu. Under successful start condition, the current falls below 1pu when speed reaches 0.9pu after about 8 to 9 sec and the current element drops off. As soon as motor is switched on stall unit picks up but drops off after motor has successful started.

In case motor speed does not rise and crawls even after expected starting of 10 sec, the stall unit trips the motor after set time delay of 11 sec. If feasible, thermal element is set as backup to Locked rotor protection. Refer Fig 8.

$T_{ST} < T_{LR} < T_{TH} < T_{HSST}$

T_{ST} : Motor Starting time at 80 % U_N : 10 Sec

T_{LR} : Stalling protection time delay : 11 Sec

T_{TH} : Relay thermal element operating time at starting current corresponding to 100% U_N : 17 Sec (Back up to stalling protection)

T_{HSST} : Hot safe stall withstand time of motor : 20 Sec

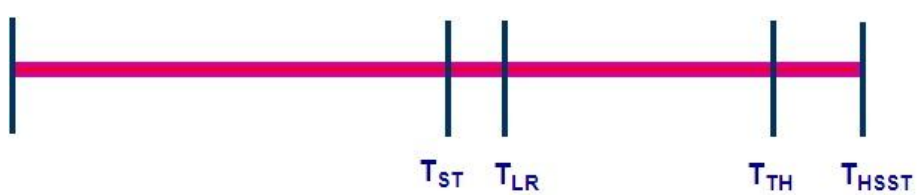

Fig 8

4.4 Locked rotor protection based on thermal stress measurement

Most of the numerical relays offer this protection. The principle of operation is based on thermal stress calculation during starting / stalling condition. Instead of fixed current and time setting as in Cl 4.3., here both current and time can vary and the rise in temperature is proportional to $\int I^2t$. Depending on fault level and motor rating, the voltage of bus during starting can vary which in turn modifies starting current (Refer Cl 2.4). If starting current is high, staring time will be less and if starting current is less, starting time will be high. Thermal stress under all scenarios is correctly captured by monitoring $\int I^2t$ (Fig 9). Relay operates when thermal content set in the relay is exceeded. The thermal content is set in terms of starting current (I_S) and starting time (T_S).

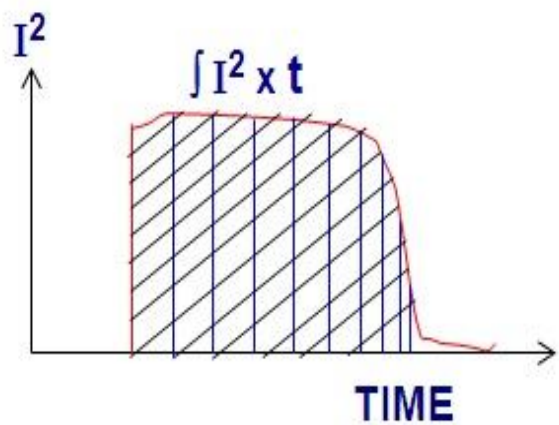

Fig 9

The setting concept is explained with an example. The relevant motor data are given in Columns A to D of Table 4. Column E gives I^2t consumed during starting. Column F gives I^2t thermal withstand capacity under stalling condition. Set I^2t trip setting as 626 (599+653/2).

The set I^2t (626) is greater than maximum of Colum E. Thus, the relay does not trip during starting, thereby permitting successful start at all voltage levels.

The set I^2t (626) is less than minimum of Colum F. Thus, the relay protects the motor during stalling at all voltage levels.

Final Locked rotor setting: I_S = 6 and T_S = 17 resulting in $I_S^2T_S$ = 612, close to desired value.
Bina Mitra was instrumental in formalizing this approach and implementing the same at various sites.

A	B	C	D	E	F
Voltage	Manufacturer's Data			$I^2 \times t_1$ consumed during starting $(Col\ B)^2 \times Col\ C$	$I^2 \times t_2$ withstand during stalling $(Col\ B)^2 \times Col\ D$
	Starting current in terms of multiple of FLC, I	Starting Time t_1 in secs	Stall withstand time in hot condition t_2 in secs		
80%	4.8	26	32	*599*	737
100%	6	14	19	504	684
110%	6.6	11	15	479	*653*

Table 4

5.0 High Impedance Differential Protection of MV motors

Differential protection is a high-speed protection provided for clearing internal faults in stator. It does not respond to faults in rotor. It is typically provided for MV motors (3.3, 6.6, 11kV) rated above 2MW. To implement this protection, windings on neutral side must be brought outside to neutral side terminal box. The conceptual differences between differential protection of motor and transformer / generator are elaborated in Cl 3.2 of Ref [2]. In any general differential protection scheme, the major concern is inadvertent operation of scheme during through fault or energization. Through fault stability is not applicable for motor. In case of motor, the KPV (Knee Point Voltage) of CTs used for differential protection and Stabilizing Resistor value are based on starting current of motor rather than system fault current which is much higher. In case of transformer energization, the inrush current flows on only one side of protected object. In case of motor the starting current flows on both sides of protected object ensuring stability. Non-operation of any differential scheme for internal fault has never been an issue.

5.1 Sample Calculations

This is illustrated with a detailed workout for two motors (one a very large motor and the other a relatively small motor). Refer Table 5 and Fig 10.

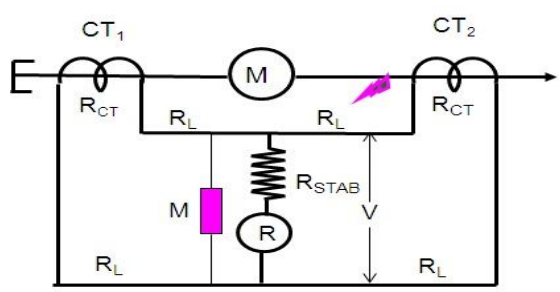

Fig.10

Item	Name	BFP	PA Fan
1	Output (MW)	17	3.4
2	Rated Voltage (kV)	11	11
3	Rated Current (A)	1000	233
4	Starting Current (A) - I_S	4500	1398
5	CTR - CT Ratio (I_N)	1500/1	300/1
6	V_K - KPV (Volts)	410	165
7	R_{CT} (Ω)	10	2.5
8	$2R_L$ (Ω)	3	3
9	Voltage developed during motor starting - V_{ST}	(4500/1500) x (10+3) = 39	(1398/300) x (2.5+3) = 26
10	I_P - Pickup	0.05 I_N	0.1 I_N
11	R_{STAB} (Ω)	V_{ST} / I_P = 39 / 0.05 = 782Ω	V_{ST} / I_P = 26 / 0.1 = 260Ω
12	I_{FP} - 3Φ Fault Current(kA)	26	26
13	I_{FS} – Reflected Fault Current = I_{FP} / CTR	17.4	87
14	V_F - Voltage developed across CT during 3 phase internal fault	17.4 x (10 + 3 + 782) = 13,827	87 x (2.5+3 +260) = 22,916
15	Peak voltage developed across CT considering saturation	2 x Sqrt[$2V_K(V_F – V_K)$] = 6639	2 x Sqrt[$2V_K(V_F – V_K)$] = 7012
16	Permissible current to limit voltage below 3kV	3000/(R_{STAB} + R_{CT} + $2R_L$) = 3.8 (21% of I_{FS})	3000/(R_{STAB} + R_{CT} + $2R_L$) = 11.4 (13% of I_{FS})

Table - 5

Most of the expressions are self-explanatory. A few remarks are made:

Items (1) to (7): As per manufacturer data

Item (8): Based on 200M to & fro lead length, 2.5mm^2 Cu wires.

Item (9): KPV requirement is evaluated using starting current value.

Voltage developed across CT during motor starting = $V_{ST} = (I_S / CTR) \times (R_{CT} + 2R_L)$

Item (10): The ground fault current in MV system is typically limited to 400A using NGR. The pickup setting in case of BFP is 75A and PA Fan is 30A, much lower than ground fault level of 400A.

Item (14): In case of internal three phase fault, voltage developed across CT-

$V_F = I_{FS} \times (R_{CT} + 2R_L + R_{STAB})$

Item (15): As per Alstom Application Guide Cl 16.19.2.3 of Ref [3]

Item (16): For relay circuit on CT secondary side, limiting voltage is fixed as 3kV. In case of internal fault, current is forced into the relay branch through stabilising resistor. For PA Fan, even if 87% of reflected fault current is consumed by CT due to saturation and only 13% is fed into burden (relay branch), the voltage across relay branch will reach 3kV. The corresponding figures for BFP are 79% and 21%. In practice, CT output to burden is expected to be higher than the limiting value of just 13% and 21%. Also, CT takes some time to saturate and before this time the CT output to burden will be even higher.

Considering the above points, it is accepted practice in industry to provide metrosil (non-linear resistor) to limit the voltage across relay branch for all motor feeders that employ high impedance scheme for differential protection.

5.2 Summary of procedure

Following are salient points to be considered for high impedance differential protection for HT motors in Auxiliary System of power plants:

Step 1: Find Voltage developed across CT during motor starting

$V_{ST} = (I_S / CTR) \times (R_{CT} + 2R_L)$

Step 2: The calculated value of V_{ST} will be rather small. Hence select Minimum Knee Point Voltage of CT liberally, say V_K > 5 to 10 times V_{ST}

Step 3: Set the pickup for relay (I_P). Since the system is usually resistance grounded to limit ground fault current to, say 400A, pickup value can be 5 to 10% of I_N. Usually BFP is the largest motor with rated current of 500A to 1000A. In this case, pick up is about 50A compared to earth fault current of 400A. Achieved sensitivity is acceptable. For other motors of lesser rating, sensitivity is not an issue as the CT ratio is much less.

Step 4: Find value of stabilizing resistor

$R_{STAB} = V_{ST} / I_P$.

Step 5: During internal three phase fault, high voltage (above 3kV) will develop *irrespective* of motor size. In case of smaller motors, CT ratio is small, reflected fault current is high and stabilizing resistor value will be less. In case of bigger motors, CT ratio is high, reflected fault current is not high but stabilizing resistor value will be large. Hence in all cases, as a routine practice, it is recommended to provide metrosil.

For theoretical completeness, following calculations are done:

Voltage developed across CT during 3 phase internal fault,

$V_F = (I_F / CTR) \times (R_{CT} + 2R_L + R_{STAB})$

Peak voltage developed across CT considering saturation

$$= 2\, x \sqrt{2V_K\,(V_F - V_K)}$$

The above value will be generally higher than 3kV. Metrosil is provided across the stabilizing resistor and relay to limit the voltage to within 3 kV.

Step 6: To avoid spurious tripping, time delay of 50msec is recommended.

S N Misal contributed to make the above perspicuous explanation possible.

5.4 Backup to Differential Protection

The details are given in Table 6. It may be noted that for ground fault, the fault current is too low (400A) for phase over current element (I_1 >) to pick up.

Fault Type	Differential	Phase O/C (I_1>)	Ground O/C (I_0>)
Phase Fault	Primary	Back up	____
Earth Fault	Primary	Does not pick up	Back up

Table 6

5.5 Remarks on Phase side and Neutral side CTs

Phase side CTs and Motor Protection Relay that includes differential protection are located in MV Switchgear. Neutral side CTs are located in Neutral Terminal Box of motor. Many times, it is over-emphasized that neutral side CT and phase side CT shall have identical excitation characteristic 'point by point'. In extreme, motor manufacturer is forced to procure neutral side CT from same vendor who has supplied phase side CT. This over emphasis is not called for as explained below:
KPV (V_K) is relevant during fault conditions so that CT develops sufficient voltage in presence of saturation to drive the current through connected burden. Excitation Current (I_{EX}) is relevant during normal operating condition. In current comparison scheme like differential protection, the errors from CTs on both sides of object should not exceed pick up setting of differential relay during normal operating condition. Typically, I_{EX} < 30 mA at $V_K/2$**.**

From Cl 5.2 – Step 2, assuming $I_S = 6I_{RAT}$

$V_K = KPV \cong 5\ (I_S / CTR) \times (R_{CT} + 2R_L)$

$= 30\ (I_{RAT} / CTR) \times (R_{CT} + 2R_L)$

Voltage developed across CT during normal operating condition,

$V_{NOR} = (I_{RAT} / CTR) \times (R_{CT} + 2R_L)$

$= V_K / 30$

If we assume the actual tested value of I_{EX} is nearly 30 mA at $V_K/2$, the excitation current will be very small at $V_K/30$ (Fig 11). Even if values of I_{EX} are slightly different for the phase side CT and neutral side CT, they are too small to have any adverse effect on operation of differential relay under normal operating condition.

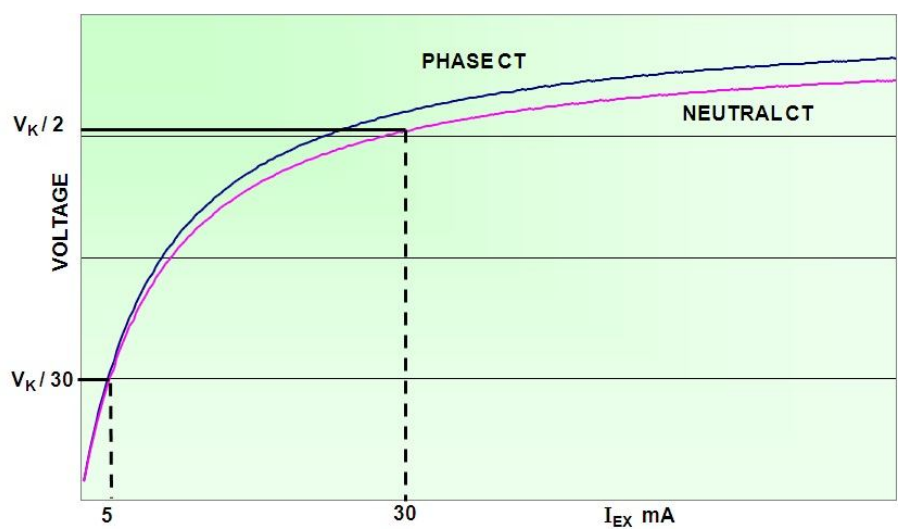

Fig. 11

In conclusion, it is sufficient to specify excitation current in conventional way, say I_{EX} < 30 mA at $V_K/2$. It is not mandatory that phase side CT and neutral side CT shall have 'identical excitation characteristics' and also need not be procured from same vendor.

5.6 Differential Protection of MV motors using CBCT

Some manufacturers (e.g. Hitachi) offer this feature. The winding from neutral side is again brought towards phase side and neutral is formed in Terminal Box on phase side (Fig 12). CBCT encloses phase side and neutral side stator conductor. Under normal or starting conditions, currents in two conductors within CBCT flow in opposite direction and net flux is zero. CBCT output is nil. In case of internal fault CBCT output is nonzero and DMT relay connected to CBCT picks up. Typical CBCT ratio is 50/1 irrespective of motor size. Thus, the scheme is akin to differential protection. This requires special design of Terminal Box and agreement between user and vendor is required in the design stage itself.

In passing, it may be mentioned that this terminal box arrangement is ideally suited for installing High Sensitivity differential Current Transformer (HSCT) used for measuring C and tanδ of winding as part of on-line health monitoring [4].

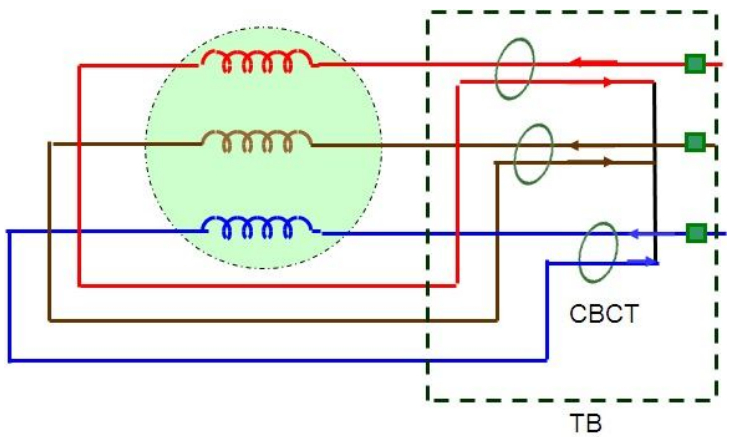

Fig. 12

6 Protection of MV induction motors against switching surges

6.1 Motor Insulation characteristics

The rated voltages of motors under discussion are 3.3kV, 6.6kV and 11kV and controlled by VCBs (Vacuum Circuit Breaker). The impulse voltage withstand characteristics of rotating equipment like motor is compared against other equipment in Table 7. Refer [5] & [6]. Since the motor winding must be placed within the confined slot space, its BIL is lower compared to other equipment. This

is an important difference to be noticed. For motor, front time of 1.2μsec is termed as LIWV (Lightning Impulse Withstand Voltage) and front time of 0.2μsec is termed as SFIWV (Steep Front Impulse Withstand Voltage). Here lightning is used in generic sense and does not mean the origin of surge has to be lightning but refers to any surge with a front time close to 1.2μsec.

Rated Voltage (kVRMS)	Insulation withstand kVpeak (pu)		
	Others	Motor	
	LIWV	LIWV	SFIWV
	Front Time: 1.2μsec	Front Time: 1.2μsec	Front Time: 0.2μsec
3.3	20 (7.4)	18 (6.7)	12 (4.5)
6.6	60 (11.1)	31 (5.8)	20 ((3.7)
11	75 (8.4)	49 (5.5)	32 (3.6)

Table 7

The stator winding of each phase is made up a number of formed coils connected in series. Each formed coil is made up a number of turns of conductor usually rectangular in shape. Typical number of coils per phase is 20 and turns per coil could be between 5 to 20 depending on voltage rating.

Two terms are frequently used when specifying insulation withstand strength of stator winding – Ground wall insulation and Inter-turn Insulation.

Ground wall insulation refers to withstand strength between conductor and steel slot in which conductor rests. The deciding factor is BIL corresponding to LIWV. Usually this is easily met for all modern motors.

BIL corresponding to SFIWV corresponds to inter turn insulation. When a fast front surge approaches the motor, the maximum stress appears on the first few turns of entry coil near phase terminal. Under this condition, turn to turn insulation failure should not occur. Surge protection device, if employed, is mainly for limiting the surge voltage within SFIWV. Most of the discussions in the sequel center around limiting the fast front surge.

The tail time (e.g. time to reach 50% of specified amplitude) for surge is omitted in the above discussions. It must be emphasized that amplitude and front time are deciding factors and large variation in tail time does not have much impact.

If inter turn fault occurs, it is very difficult to identify by monitoring quantities from motor terminal. Locally the current within shorted turn can be very high but may not lead to noticeable change in terminal current. The local heating gradually damages the insulation and will finally lead to ground

wall insulation failure. The situation is very similar to inter turn fault in transformer where the only clue for identification can be either Buchholz operation due to gas formation because of local heating or changes in online DGA parameters monitored if available.

6.2 VCB Switching and Surge Arrestor Requirement

The source of steep front surge in motor application is VCB switching operations. Modern MV switchgears at 3.3kV, 6.6kV and 11kV mostly employ VCBs. The current chopping level of modern VCB using copper – chromium contact material is less than 5A. Of course, the level of chopping current is dependent on load or fault current flowing through VCB. In case of high load or fault current, the chopping current is practically zero. In case of breaking low currents, the chopping current is higher due to instability of arc [7].

Consider the case when VCB breaks the current of a normally running induction motor in say 100 msec. The back emf of running motor during this time is substantial as open circuit time constant of motor is of the order of couple of seconds. Refer Cl 8.2 of [8]. Thus, when VCB contacts open the voltage across the breaker contacts is minimum due to presence of significant voltage on load side. Under this condition, probability of restrike is practically nil.

Consider another case when VCB trips either during staring or under stalled condition. Under both the conditions, back emf of motor is very low. Since the load side voltage is very low, voltage across break contacts (TRV) can be substantial to initiate multiple restrikes. This generates steep front over voltages that can endanger inter-turn insulation of first coil of motor.
As per industry experience cut off current is 600A. Refer Cl 9.7 of [9] and [10]. If the breaking current is less than 600A, there is a possibility of multiple restrikes. If the breaking current is more than 600A VCB can satisfactorily break without restrike.

Assume $I_{START} = I_{STALL} = 5.5\ I_{RAT}$ (550%)

If cut off current limit is 600A (starting or stalling current),

$I_{RAT} = 600 / 5.5 = 109A$

Assume η (efficiency) = 0.95 and pf (power factor) = 0.9

Cut off power rating $\leq 1.732 \times V \times 109 \times 0.95 \times 0.9 = 161 \times V$

For 3.3kV motor, $P \leq 531KW$

For 6.6kV motor, $P \leq 1062KW$

For 11kV motor, $P \leq 1771KW$

Rounding off, following cut off values are suggested:

For 3.3kV motor, $P \leq 600KW$

For 6.6kV motor, P ≤ 1000KW

For 11kV motor, P ≤ 2000KW

For motors rated above cut off value, no additional surge protection equipment is required, and inherent motor insulation is adequate to protect against steep front surges. For motors rated below cut off value, surge arrestor is recommended.

In this context, it is pertinent to discuss about surge impedance of motor. It is given (approximately) by following formula, Eqn A.2 of Ref [11]:

$$Z_M = 200 \times (kV)^{0.32} \times (kHP)^{-0..64}$$

Surge impedance against Rating for the three voltage levels are shown in Fig 13. The surge impedance is very low for motors of higher rating and is substantially higher for motors of smaller ratings.

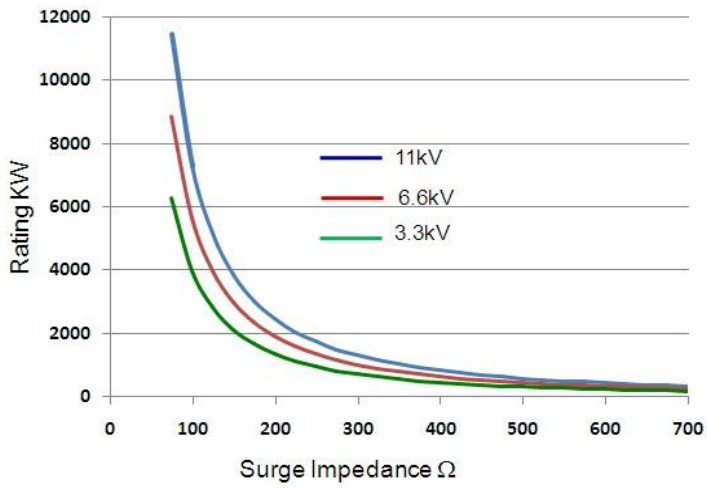

Fig.13

Assume a steep front surge enters from VCB into the connecting cable to motor. The Surge impedance of cable (Z_C) is typically 30Ω. The magnitude of surge entering the motor is given by (Fig.14):

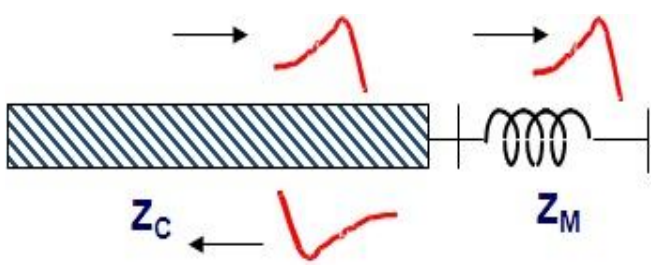

Fig.14

$$Transmitted\ wave = \frac{2}{1 + \left(\frac{Z_c}{Z_M}\right)}$$

For high capacity motors, Z_M is small and amplitude of transmitted wave is less.

For small capacity motors, Z_M is higher and amplitude of transmitted wave is also higher and can reach almost twice that of incoming surge.

This is another reason the surge arrestor is required only for motors of smaller capacity.

6.3 Recommendation for practical implementation at site

In the last thirty years, technology of VCB manufacture has dramatically improved with superior contact materials. Also, there is concomitant improvement in insulation systems of stator coils of motors. The old apprehensions that existed when VCBs were introduced for motor duty applications are carried for too long and surge arrestors are specified as de-facto standard irrespective of motor size. But in majority of motor applications surge arrestors may not be required and if provided only increases unreliability. Surge arrestor failure under normal running condition is not uncommon and this creates bus fault resulting in flow of large fault current. Also, that particular feeder is temporarily out of service even though connecting cable and motor are healthy. Instead of eliminating surge arrestor altogether, we however suggest a more moderate approach in application of surge arrestors when motors are controlled by VCBs.

Our recommendations are summarized below:

1. Surge arrestors are recommended for following ratings switched by VCBs:

   For 3.3kV motor, P ≤ 600KW

   For 6.6kV motor, P ≤ 1000KW

   For 11kV motor, P ≤ 2000KW

2. Surge arrestors are not needed for motors switched by Vacuum Contactors.

3. The insulation system of stator coils shall strictly conform to [6]. Two main tests to be performed *on sample coil* are (i) impulse test on inter-turn insulation as per SFIWV in Table 7 and (ii) impulse test for ground wall insulation as per LIWV in Table 7. Though standards allow power frequency withstand test as an alternative for (ii), user should prefer only LIWV.

4. The wound stator before impregnation must undergo surge comparison test to positively confirm absence of turn to turn fault. Details of surge test and nuances in interpreting the results are given in [12].

5. If 3C cables are used, the armour shall be bonded at both the ends (switchgear end and motor end). This is irrespective of motor size.

6. If single core cable is used, armour shall be bonded only at motor end. This can substantially reduce magnitude of steep front surge impinged on motor. Refer Cl 6.2(f) of [11]. This is irrespective of motor size. The 'conventional wisdom' is to earth the armour of single core cable at switchgear end but in case of motor, it is preferred to earth only at motor end.

7. The ideal location for surge arrestor will be very near to motor terminal. However, in majority of cases the arrestor is bought as part of switchgear and located at switchgear end. Thus, the location of arrestor itself casts some doubt about the effectiveness of arrestor to limit the surge voltage at motor terminal to the desired extent. But having decided to locate the arrestor at switchgear end, it is desirable to select the arrestor that will give adequate protective margin against steep front voltages. The deciding criterion is the residual voltage offered by surge arrestor for steep front impulse voltage. Steep front surge is the most onerous one that leads to inter-turn fault. When selecting surge arrestor, residual voltage for conventional 8/20μsec discharge current of 5kA shall be less than LIWV of motor to give adequate protective margin. This is easily satisfied and corresponds to ground wall insulation. In addition, residual voltage for steep front current of 5kA with 1μsec front time shall not be more than SFIWV of motor. This will hopefully minimize probability of inter-turn failure.

Interactions with Rahul Gosain greatly benefitted the author in understanding insulation characteristic of HT motors. Amol Salunkhe provided clarifications on many aspects of VCB switching transients and Surge Arrestor characteristics.

6.4 Illustration for surge arrestor selection

Motor Rating: 6.6 kV

From Table 7,

Lightning Impulse Withstand Voltage (LIWV) = 31kV

Steep Front Impulse Withstand Voltage (SFIWV) = 20kV

Broad details of Surge Arrestor chosen:

1. Make: ABB
2. Type: MWK 06.
3. Rated Voltage - 7.5 kV RMS
4. COV - Continuous Operating Voltage - 6 kV RMS
5. Residual voltage for 8/20μsec at 5 kA – 17.4 kV (<LIWV)
6. Residual voltage for steep front at 5 kA - 19.2 kV (< SFIWV)
7. Discharge class - 2

7.0 Loading, Insulation Class and Service Factor (SF)

7.1 Current Loading

The sizing of motors generally follows the following sequence:

(a) During design stage, process group estimates load requirement, adds 10 to 15% margin and passes on the data to electrical group.

(b) Electrical group selects next higher standard size taking into account ambient conditions.

(c) Generally, this results in actual load current at site being on average about 80% or lower of rated current. This is in broad agreement with actual measurements done at two different power plant sites when the units were generating maximum rated power. Refer Tables 8 and 9 for sample readings.

(d) Thus, margin is already built in design stage as far as current loading is concerned.

Site 1: HT Motor loading – Unit Generation 300 MW

Sr. No	Motor	Rating			Site measurement	% Current loading
		KW	KV	Amps	Current in Amps	
1	BFP	5600	6.6	565	417	74
2	ID FAN	3050	6.6	313	187	60
3	PA FAN	2300	6.6	231	136	59
4	CW PUMP	1500	6.6	162	142	87
5	FD FAN	1120	6.6	112	31	28
6	CEP	1000	6.6	100	60	60
7	COAL MILL	560	6.6	61	37	61
8	ACW	350	6.6	39	36	92
					Average	65

Table 8

Site 2: HT Motor loading – Unit Generation 660 MW

Sr. No	Motor	Rating			Site measurement	% Current loading
		KW	KV	Amps	Current in Amps	
1	MD BFP	17000	11	1005	914	91
2	ID FAN	4950	11	298	254	85
3	PA FAN	3300	11	199	150	75
4	CW PUMP	3600	11	252	233	92
5	FD FAN	1850	3.3	379	205	54
6	CEP	1250	3.3	252	216	86
7	COAL MILL	950	3.3	206	148	72
8	AIR COMPRESSOR	770	3.3	158	115	73
					Average	78

Table 9

7.2 Insulation Class

Both HT and LT motors are procured with Class F insulation (155°C) but temperature rise is limited as per Class B insulation (130°V). This is usually termed as 'F/B'. To understand implication of this choice, refer Fig 15 which shows relationship between temperature and insulation life. Insulation life is defined with base of 20,000 hours and tensile strength reducing to half its original virgin value at specified temperature. Tensile strength will reduce by half if Class F material is maintained at 155°C and Class B material is maintained at 130°C for 20,000 hours. Also it can be observed that life reduces by half for every 10°C rise in temperature.

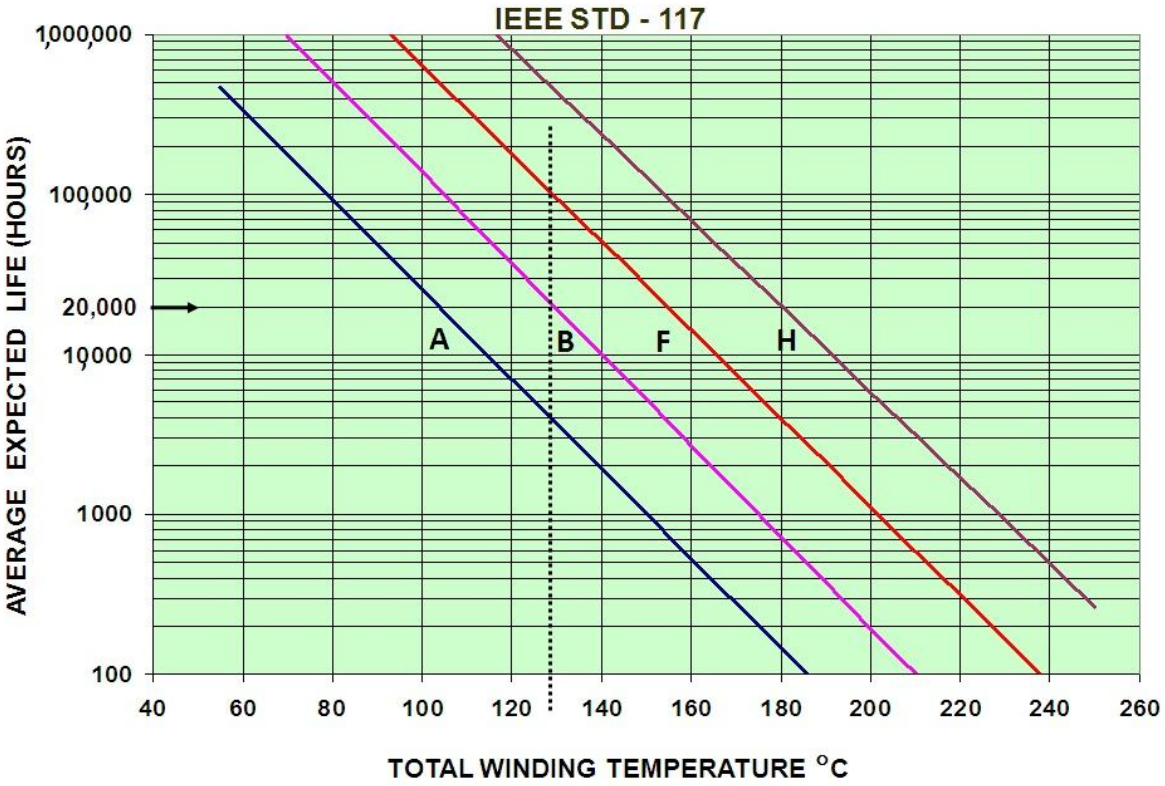

Fig. 15

Assume the cooling system is designed, with 10°C margin, to limit the temperature to 120°C. For Class F insulation, expected life at 120°C is 200,000 hours. At 6500 hours per year of operation,
Operating life = 200,000 / 6,500 = 31 years

Also, the margin obtained by choosing "F/B" instead of 'B/B' is illustrated here. At 120°C, with class B insulation, life is 40,000 hours. With Class F insulation, life is 200,000 hours. Thus, insulation life is five times more with "F/B' compared to 'B/B'.

7.3 Service Factor (SF)

- It specifies capacity of motor to withstand *periodic* over load conditions. It is legacy from NEMA standards. A motor with SF of 1.0 operating for a prolonged period above full load at rated ambient temperature will suffer insulation damage that will shorten operational life. A motor with SF of 1.15 can work at 15% above rated power without immediate failure and for extended and repeated periods (hours) but may suffer damage which shortens motor life.

- Specifying SF more than 1.0 is conceptually same as specifying 'F/B'. With rated current, cooling system is designed to limit temperature within 130°C as per Class B insulation. With over load of say 15%, corresponding to SF of 1.15, temperature will be limited within 155°C as per Class F insulation.

- In brief, if motor is designed for 'F/B' (Class F insulation with Class B temperature rise), there is no need to assign any Service Factor and default value of 1.0 will suffice. Design margins in current (Cl 7.1) and cooling / insulation life (Cl 7.2) ensure longer operating life of motor.

8.0 Wound Rotor Induction Motor

Wound rotor motors are used when high starting torque and reduced starting current are required. External resistors in the three phases of rotor circuit cut in during starting. The resistor is gradually cut out once the motor picks up speed. At full speed, external resistor is shorted. Typically starting current (I_{ST}) is limited to 300% which would have been 600% without the resistor in rotor circuit. In this section two aspect peculiar to wound rotor motor namely stalling protection and rotor open circuit protection are discussed.

8.1 Difference between cage rotor and wound rotor characteristics

In case of cage rotor motor, sustained operation in current range of 150% to 500% is not practical (Refer Cl 4.1). For wound rotor motor, operation in this range for significant time is possible. If starting current is limited to 300%, current during the entire starting period will be nearly 300%. But once the motor has started and rotor resistance shorted, sustained operation in current range of 150% to 500% is again not feasible.

During starting if stalling occurs, stalling current (I_{LRS}) will be limited to 300%. However, if stalling occurs under running condition with external rotor resistor shorted, stalling current (I_{LRR}) will be 600% and *not* 300%.

a) In case of cage rotor, $I_{ST} = I_{LRS} = I_{LRR}$ = 6pu (600%)

Transient Reactance X' = 1 / I_{ST} = 0.16 pu

For terminal fault, motor contribution to fault = 1 / X' = I_{ST} = 6pu (600%)

Negative sequence reactance X_2 = 1 / I_{ST} = 0.16pu

b) In case of wound rotor, I_{ST} = 3pu (300%)

Transient Reactance X' ≠ 1 / I_{ST} ≠ 0.33pu

= 1 / I_{LRR} = 1 / 6 = 0.16pu

For terminal fault, motor contribution to fault = 1 / X' = I_{LRR} = 6pu (600%)

Negative sequence reactance X_2 = 1 / I_{LRR} = 0.16 pu

8.2 Stalling protection

In case of cage rotor, pick up for stalling protection (I_{PU}) is set at 200%. In case of wound rotor with rotor resistance start, I_{PU} is set at, say 350%. If stalling occurs during running condition only, stalling protection picks up. During starting, if stalling occurs, thermal element offers protection. It is not that onerous as current is limited within 300%. Example of typical setting adopted is given below:

a) Motor data
Starting current = 300%
Starting time = 15 sec
Locked rotor (Stalling) current = 600%
Hot Safe stall withstand time = 7 sec

b) Stall unit setting
Current pick up I_{PU} = 350%
Time delay = 6.5 sec
Refer Cl 4.3 for comparison with cage rotor.

8.3 Open Circuited Rotor Phase

From stator side it appears as line to line fault (Fig 16). The stator current will have significant negative sequence component.

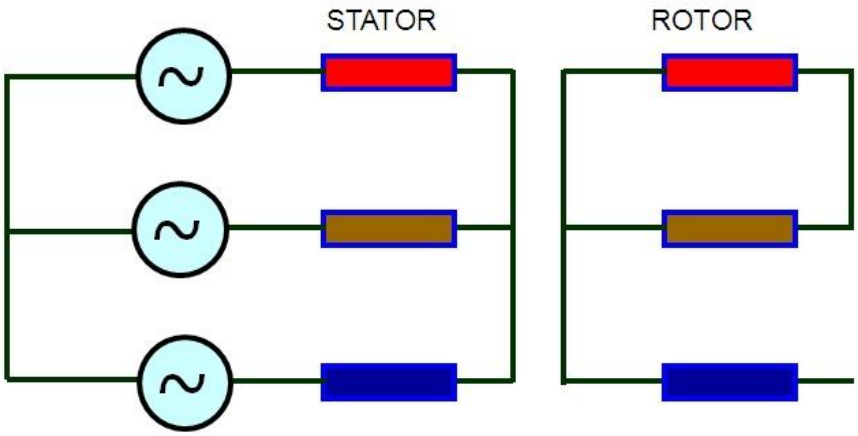

Fig 16

If rotor is open at start, motor cannot accelerate beyond 50 % speed. Near 50% speed the electrical torque developed by motor collapses (Fig 17) and this is called 'Goerges Phenomenon' [13].

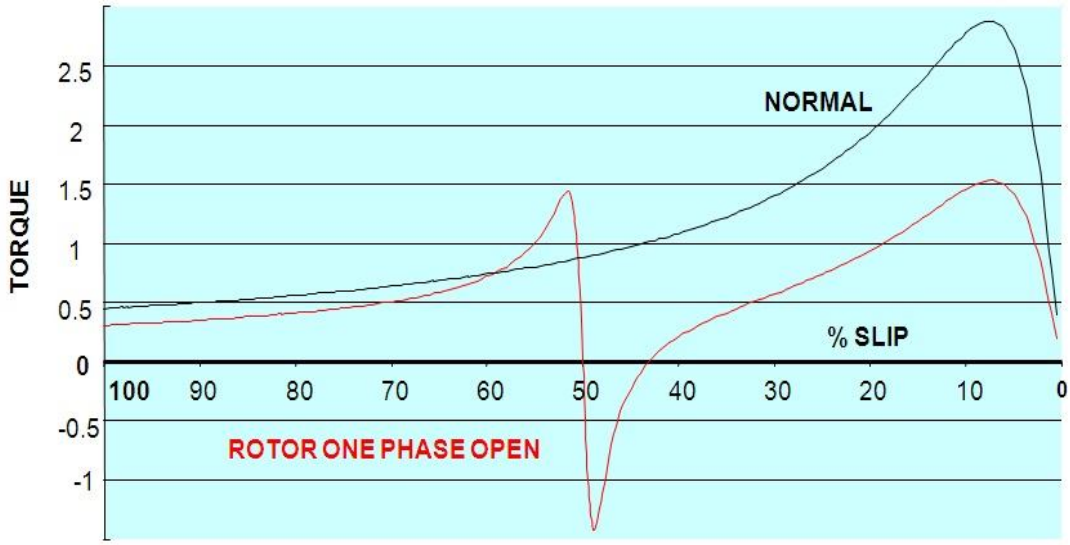

Fig 17

During running, if one of the rotor phases open, stator current oscillates (Fig 18). This makes it difficult for the relay to issue trip command positively. Some incidents of motor damage have been reported from sites where the relay has failed to pick up for this condition.

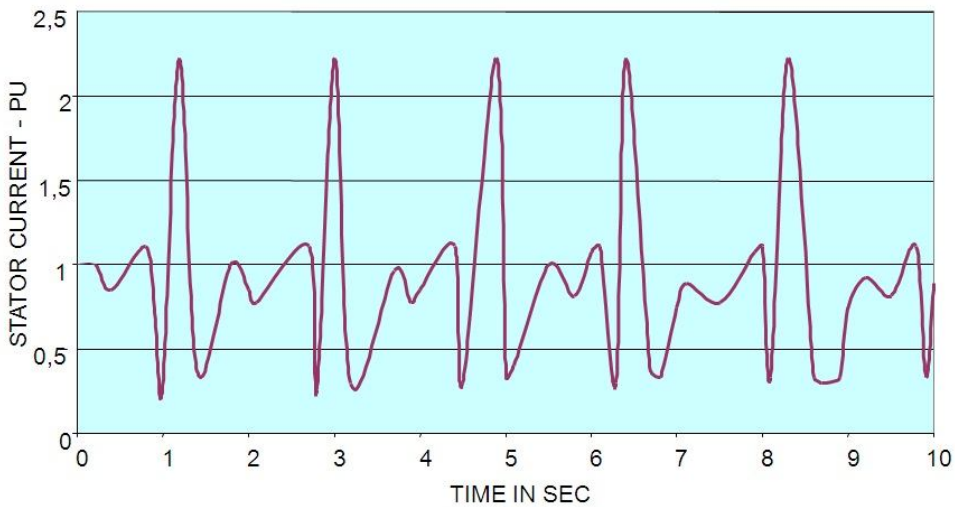

Fig 18

Two suggestions to improve positive tripping are given below:

a) Since current oscillates, conventional over current element (I>) with DMT characteristics will pick up and drop off periodically without initiating tripping. If reset time is instantaneous when current falls below pickup value, the relay will reset immediately. Pick up and drop off will occur continuously till fault becomes permanent during which time motor may be damaged. To overcome this problem, numerical relays (e.g. MiCOM P141 to 145) now offer 'timer hold' facility. With the proper reset timer settings, it is possible to accumulate the current excursion times and issue the trip command after the cumulative time has elapsed. For example, with reference to Fig 18, the reset time can be set at 3 sec, and current pickup can be 130% with time delay of 15 sec. The current pulse duration when current magnitude exceeds 130% is integrated and when the accumulated value reaches 15sec, trip command is issued. To prevent tripping during starting, either this element shall be bypassed during starting through logic or time delay shall be more than starting time of motor. Some users prefer to wire this protection for only alarm so that ordered manual shut down can be initiated from process point of view.

b) Thermal element may act as a back up to over current element with 'timer hold' facility but operating time is very uncertain. Current seen by thermal element is given by:

$$I_{TH} = \sqrt{(I_1^2 + KI_2^2)}$$

Since negative sequence component of stator current is significant under rotor open circuit condition, chances of I_{TH} pickup can be improved by choosing higher value of K, say 6 to 8 instead of 3.

The author greatly benefited from suggestions offered by Bina Mitra on the above topic.

9.0 Conclusions

The major observations are as follows:

(a) Formula for 'back of envelop' calculations for estimating dip during starting of HT motor are given. Only in case the simple hand calculations indicate dip above 15%, it is necessary to go in for simulation using advanced software.

(b) In case of LT motors connected by long cable, voltage dip during motor starting can be high under certain conditions. In these cases, to reduce starting voltage dip, it is recommended to increase number of runs rather than increasing the cable size.

(c) Procedure for setting Locked rotor protection based on thermal stress evaluation is explained with a practical example.

(d) Metrosil shall be provided in high impedance differential protection schemes irrespective of motor size to limit secondary voltage within limits during an internal fault. It is not mandatory to have identical excitation characteristics for phase side CT and neutral side CT. Differential protection using CBCT is also possible.

(e) Recommendations for protection of MV motors controlled by VCB against steep front surges are listed in Cl 6.3.

(f) There is no need to specify Service Factor for motors designed for 'F/B' (Class F insulation with Class B temperature rise).

(g) Differences in locked rotor protection philosophy between cage rotor and wound rotor are brought out. Rotor open circuit in case of wound rotor motor can go undetected due to oscillating nature of current resulting in motor damage. By enabling 'timer hold facility', positive pickup can be ensured.

10.0 Reference

[1] "Conceptual Clarifications in Electrical Power Engineering – Part 1" K Rajamani, IEEMA Journal, Aug 2016, pp 69-80

[2] "Selection of current transformer parameters for optimum design – User perspective", K Rajamani and Bina Mitra, Second International Conference on Instrument Transformers, Jan 2010, IEEMA, Mumbai, Page II-8 to 13

[3] Alstom Network Protection and Automation Guide, 2011

[4] "Online Health Monitoring of Motor Insulation", Prabhakar Neti and Brant Wilhelm, General Electric Document, 2013

[5] "Insulation co-ordination – Part 1: Definitions, principles and rules", IEC 60071-1, 2011

[6] "Impulse voltage withstand levels of rotating ac machines with form wound stator coils", IEC 60034-15, 1995

[7] "A Statistical Vacuum Circuit Breaker Model for Simulation of Transient Overvoltages", Janko Kosmac and Peter Zunko, IEEE Trans on Power delivery, Jan 1995, pp 294 – 300

[8] "Auto Changeover in Power Plants and Induction motor performance", ", K Rajamani and Bina Mitra, IEEMA Journal, December 2016, pp 76 – 83

[9] "Application Guidelines - Dimensioning, testing and application of metal oxide surge arresters in medium voltage systems", ABB, 2009

[10] "Surge limiter application recommendations for metal-clad switchgear up to 15 kV", Siemens, 2009

[11] "IEEE Guide for the Application of Surge Voltage Protective Equipment on AC Rotating Machinery 1000 V and Greater", IEEE Std C62.21 – 2003

[12] "Current state of surge testing induction machines", John Wilson, Baker Instrument Company, Iris Rotating Machine Conference, June 2003, Santa Monica, CA

[13] "The Goerges Phenomenon – Induction Motors with Unbalanced Rotor Impedances", H L Garbarino and E T B Gross, AIEE Transactions, 1950, Vol 69, pp 1569 – 1575.